Comfort

Waterborne indoor climate systems

Lindab®

1
2
3
4
5
6
7
8
9
10
11
12
13
14
15
16
17
18
19

Belgium
LINDAB NV
Zeeschipstraat 149
BE-9000 GENT
Phone +32 9 385 5011
Fax +32 9 385 6062
www.lindab.be
e-mail info@lindab.be

Czech Republic
LINDAB s.r.o.
Karlovarská Business Park
Na hürce 2
CZ-160 00 Praha 6 - Ruzynê
Phone +420 233 107 100
Fax +420 233 107 163
www.lindab.cz
e-mail info@lindab.cz

Denmark
LINDAB A/S
Postbox 1071
Langkaer 20
DK-6100 HADERSLEV
Phone +45 73 232323
Fax +45 73 232333
www.lindab.dk
e-mail lindab@lindab.dk

Estonia
LINDAB AS
Saha-Loo tee 4
EE-74114 JOELÄHTME VALD,
HARJU MK.
Phone +372 6348200
Fax +372 6348210
e-mail lindab@lindab.ee

Finland
Oy LINDAB Ab
Juvan Teollisuuskatu 3
FI-02920 ESPOO
Phone +358 20 785 10 10
Fax +358 20 785 10 73
www.lindab.fi
e-mail info@lindab.fi

France
LINDAB S.A.
Parc d'Activités
FR-01 120 MONTLUEL
Phone +33 47806 3641
Fax +33 47806 3616
www.lindab.fr
e-mail lindab.france@wanadoo.fr

Germany
LINDAB GmbH
Postfach 1355
DE-22935 BARGTEHEIDE
Phone +49 4532 28590
Fax +49 4532 5666
www.lindab.de
e-mail lindab@lindab.de

Hungary
LINDAB Kft.
Állomás. ut. 1/A
HU-2051 BIATORBÁGY
Phone +36 23 531100
Fax +36 23 312011
www.lindab.hu
e-mail info@lindab.hu

Italy
LINDAB S.R.L
Via Pisa 5-7
IT-10088 VOLPIANO (TO)
Phone +39 011 9952099
Fax +39 011 9952499
www.lindab.it
e-mail lindab@lindab.it

Latvia
LINDAB SIA
Kurzemes Pr. 23
LV-1067 Riga
LATVIA
Phone +371 780 43 71
Fax +371 780 43 80
GSM: +371 9136530
e-mail lindab@lindab.lv

Lithuania
LINDAB UAB
Mokslininku g. 20
LT-08410 VILNIUS
Phone +370 52 729 729
Fax +370 52 729 730
GSM: +370 68 68 48 06
e-mail lindab@lindab.lt

Norway
LINDAB A/S
Postboks 171 Kalbakken
NO-0903 OSLO
Phone +47 22 80 39 00
Fax +47 22 80 39 03
www.lindab.no
e-mail lindab@lindab.no

Poland
LINDAB Sp. z o.o.
Sadowa, ul. Kolejowa 311
PL-05-092 LOMIANKI
Phone +48 22 4898800
Fax +48 22 7519667
www.lindab.pl
e-mail info@lindab.pl

Romania
LINDAB SRL
Soseaua de Centura,
nr. 8 Stefanestii de Jos
RO-077175 - ILFOV
Phone +40 21209 4100
Fax +40 21209 4124
www.lindab.ro

Russia
Lindab Co. Ltd
197701, Russia Saint-Petersburg,
Sestroretsk
st. Voskova, h.2., Litera V.
Phone +7 (812) 380 53 60
Fax +7 (812) 380 53 59
www.lindab.ru
e-mail vent@lindab.ru

Sweden
LINDAB SVERIGE AB
SE-269 82 BÅSTAD
Phone +46 (0)431 850 00
Fax +46 (0)431 850 65
www.lindab.se
e-mail sve@lindab.se

Switzerland
LINDAB AG
Hofstrasse 94
CH-8620 WETZIKON
Phone +41 58 800 3100
Fax +41 44 58 800 3131
www.lindab.ch
e-mail info@lindab.ch

UK
LINDAB Ltd
10 Woodall Road
Redburn Industrial Estate
Enfield
GB-Middlesex EN3 4LE
Phone +44 (0)20 8805 3656
Fax +44 (0)20 8805 0558
www.lindab.co.uk
e-mail sales@lindab.co.uk

USA
Lindab Inc.
2600 Airline Boulevard
Portsmouth, VA 23701
Phone: +1 757 488 1144
Fax: +1 757 398 1264

Table of Contents

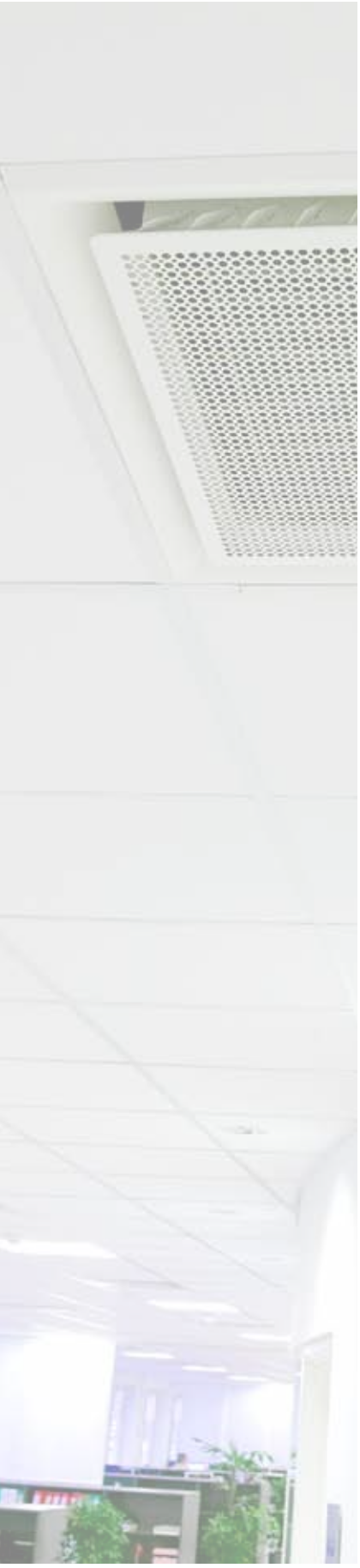

Product overview	Contact, overview, index		1
Theory	Guideline heating and cooling		2
Supply air beams	Plexus	Page 79	3
	Professor	Page 105	4
	Pilot	Page 135	5
	Architect	Page 157	6
	Polaris I & S	Page 197	7
	Plafond	Page 253	8
	Podium	Page 283	9
	Celo	Page 303	10
Passive chilled beams	Cabinett	Page 325	11
	Capella	Page 337	12
	Carat	Page 351	13
Facade systems	Fasadium	Page 367	14
Heating & Cooling panels	Atrium/Loggia	Page 397	15
Control equipment	Regula	Page 417	16
Condensation protection	Drypac™	Page 433	17
Lighting	Lighting	Page 439	18
Climate simulation	TEKNOsim	Page 449	19

© 02.2010 Lindab Ventilation A/S. All forms of reproduction without written permission are forbidden. Lindab® is the registered trademark of Lindab AB.
Lindab's products, systems, product and product group designations are protected by intellectual property rights (IPR).

Index

1
2
3
4
5
6
7
8
9
10
11
12
13
14
15
16
17
18
19

Table of Contents

Page

Contact 4
Product overview 6

Theory

Ceiling heating guide 17
Chilled ceiling guide, passive beams 57

Supply air beams

Plexus 79

The flexible supply air beam!

Function: Cooling, heating, ventilation, with built-in controller
Use: Offices, hotels, restaurants, conference rooms, schools, etc
Installation: Integrated with the suspended ceiling
Capacity: Cooling effect of up to 1000 W, air quantity of up to 52 l/s, 80 pa (Plexus 60). Cooling effect of up to 1500 W, air quantity of up to 45 l/s, 80 pa (Plexus 120).
Important features: Plexus 360° air diffusion. 30% reduced draft risk because of shorter air throws. Easy to install into ceiling, ventilation, cooling, heating and regulation, JetCone adjustment, all in one!

Pilot 135

The variable supply air beam!

Function: Cooling, heating, supply air with built-in control equipment.
Use: Offices, hotels, restaurants, conference rooms, schools, etc.
Installation: Integrated into a suspended ceiling.
Capacity: Cooling effect of up to 2130 W.
Air volume of up to 65 l/s.
Worth noting: Pilot employs a unique, patent-applied-for, Jet gap that allows adjustment of airflows, air pressures and distribution patterns. Can be easily adapted to new conditions.

Polaris I & S 197

The most powerful supply air beam on the market!

Function: Cooling, heating, supply air and built-in control equipment.
Use: Offices, hotels, restaurants, conference rooms, schools.
Installation: Integrated in a suspended ceiling.
Capacity: (I): Cooling effect of up to 2450 W.
Air volume of up to 75 l/s. (2 x 100 mm connection)
(S): Cooling effect of up to 1390 W.
Air volume of up to 40 l/s.
Worth noting: Large capacity with a limited surface.

Preconditions for the max. airflow and effect:

80 Pa
Δt mean water – room 10° C / heating 30° C
Δt air 6° C
Beam length = 3 m

Professor 105

The supply air beam that can cope with anything!

Function: Cooling, heating, supply air, lighting with built-in control equipment.
Use: Offices, hotels, restaurants, conference rooms, schools.
Installation: Integrated into a suspended ceiling (Professor I) or suspended installation (Professor F).
Capacity: Cooling effect of up to 1390 W.
Air volume of up to 40 l/s.
Worth noting: Low installation height – only 120 mm

Architect 157

Supply air beam of your own design!

Function: Cooling, heating, supply air, built-in valves/actuators and lighting.
Use: Offices, hotels, restaurants, conference rooms, schools, etc.
Installation: Directly on to the ceiling or wall, or suspended.
Capacity: Cooling effect of up to 1625 W.
Air volume of up to 65 l/s.
Worth noting: Freedom in architectonic design.
Extremely low installation height - down to 110 mm.

Plafond 253

For compact and aesthetic installation!

Function: Cooling, heating, supply air and built-in valves/actuators.
Use: Offices, hotels, restaurants, conference rooms, schools, etc.
Installation: In the corners between wall/ceiling
Capacity: Cooling effect of up to 1330 W.
Air volume of up to 40 l/s.
Worth noting: For visible installation in the corners between a wall/ceiling.

We reserve the right to make changes

Index

Supply air beams

Podium 283

Supply air beam with high radiation quotient
Function: Cooling, heating and supply air
Use: Offices, hotels, restaurants, conference rooms, schools, shopping centres, etc.
Installation: Integrated into a suspended ceiling or suspended installation
Capacity: Cooling effect: 866 W. Air volume of up to 40 l/s.
Worth noting: Low operating pressure. Easy to clean. Available in lengths of up to 6 m.

Passive chilled beams

Cabinett 325

Natural convection cooling - quiet
Function: Cooling
Use: Offices, hotels, restaurants, conference rooms, schools, industries, etc.
Installation: 3 different models for suspended installation or installation into a suspended ceiling. Open or closed air circulation.
Capacity: Cooling effect: 920 W.
Worth noting: High cooling capacity. Available with Drypac™.

Carat 351

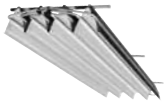

Natural convection cooling – quiet, draught-free and resource-efficient
Function: Cooling
Use: Offices, shopping centres, industries, etc.
Installation: Suspended or installed above a perforated suspended ceiling.
Capacity: Cooling effect: 978 W.
Worth noting: Radiant chilled beam for a draught-free climate. For visible or concealed installation. Available in lengths of up to 6 m. Can be connected in series.

Celo 303

Systems for concealed cooling!
Function: Cooling and ventilation
Use: Offices, conference rooms, restaurants, shops, etc.
Installation: Installations for concealed assembly combined with suspended acoustic ceilings. The system requires open slits in the suspended ceiling for the outlet of cooled air and for the intake of warm air from the room to the chilled beam.
Capacity: Cooling effect of up to 695 W.
Air volume of up to 20 l/s.
Worth noting: The cooled air has a fan-shaped distribution pattern, which ensures low air velocities in the occupied zone. Celo is available in lengths of up to 3.6 m.

Capella 337

Radiant chilled beam with low air velocities
Function: Cooling
Use: Offices, hotels, restaurants, conference rooms, schools, shopping centres, etc.
Installation: Suspended or installed above a perforated suspended ceiling.
Capacity: Cooling effect: 620 W.
Worth noting: Radiant chilled beam for a draught-free climate. Easy to clean. Available in lengths of up to 6 m.

Facade systems

Fasadium 367

Function: Cooling, heating, ventilation with built-in control equipment.
Use: Offices, shops, schools, banks, hospitals, etc.
Installation: Facade placement behind built-in windowsills.
Capacity: Cooling effect: 990 W.
Heating effect: 2370 W.
Air volume of up to 48 l/s. (At 150 Pa and 1.5 m)
Worth noting: Adapted for low air pressures (100 Pa).

Index

1 2 3 4 5 6 7 8 9 10 11 12 13 14 15 16 17 18 19

Heating and cooling panels

Atrium H / Loggia 397

Radiant heating – comfortable and energy-efficient
Function: Heating
Use: Industries, schools, hospitals, shopping centres, sports centres, etc.
Installation: Suspended or integrated (refers to Atrium) in a suspended ceiling.
Capacity: Heating effect of up to 840 W.
Worth noting: The lightest heating panel on the market. Easy to clean. Available in lengths of up to 6 m. Can be connected in series.

Atrium C..... 397

Radiant cooling – quiet and draught-free
Function: Cooling
Use: Industries, schools, hospitals, shopping centres, sports centres, etc.
Installation: Suspended.
Capacity: Cooling effect of up to 268 W.
Worth noting: The lightest chilled panel on the market. Easy to clean. Available in lengths of up to 6 m. Can be connected in series.

Control

Regula control equipment 417

Customised control equipment for water-borne climate systems with individual regulation.
Use: Regula Mono, Duo and Regula Verax, are control centres that can sequentially control the cooling and heating in the room, or control just the cooling or the heating. Regula Secura, condensation guard for secure and optimum operation.
Installation: Regula Mono, Duo and Verax are available for integrated installation in the products or directly on the wall. Regula Secura and Regula Connect are integrated in or on products.
Worth noting: Control equipment that is easy to use.

Condensation protection

Drypac™..... 433

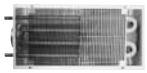

Function: For effective condensation protection
Use: When you need high security against condensation drips and/or higher performance.
Application: Applied on finned batteries
Worth noting: Inorganic material.
Can be used continuously at 4° C below the dew point.

Lighting

Lighting 439

Integrated lighting for chilled beams – all in one
Use: Integrated lighting for installation in Professor and Architect chilled beams. By integrating the lighting, it takes up less space.
Installation: Supplied integrated into the chilled beam.
Worth noting: All in one facilitates installation, etc.

Climate simulation

TEKNOsim 449

IT software for simulating cooling and heating requirements.
Use: By using TEKNOsim, you can produce simulations illustrating the cooling and heating requirements during the year.
Worth noting: TEKNOsim is an easy-to-use advanced simulation programme, which generates reality-based simulations for dimensioning the cooling and heating. You can also simulate the directed operative temperature.

We reserve the right to make changes

References

At www.lindabcomfort.com you will always find the most up to date references and product news.

Meeting room

Conference room

Hotel

Office

Open-plan office

Lunchroom

We make a difference in the indoor climate

1 2 3 4 5 6 7 8 9 10 11 12 13 14 15 16 17 18 19

A good indoor climate is far from a natural part of daily life - although it should be. Now, however indoor climate has been put on the agenda of the public debate. This makes demands on you, and Lindab can help you meet them.

Lindab puts indoor climate on the agenda.

Not all your customers think about the underlying factors for a good indoor climate. Lindab does. Our many years of experience has given us an in-depth knowledge of how to create the best conditions for a good indoor climate - and an understanding of what it means for both health and well-being. We put that knowledge and experience at your disposal, when you choose Lindab as your business partner.

We help to secure a good indoor climate for everyone

We don't just make a difference with regards to the indoor climate - but also in the co-operation with our customers. It is not by coincidence that our products are integral parts of the majority of the world's ventilation-systems. Right from the design through production to the final delivery, your needs are front and centre. It is by working together that we can achieve success. How? That is just what we will give you an insight to on the following pages.

Good indoor climate doesn't just happen. You being able to offer your customers the best possible indoor climate is built on four key abilities: knowledge, logistics, design and dialogue. We have these abilities, and that is exactly why Lindab makes a difference.

Knowledge

Knowledge is about being in possession of the necessary competence and insight, which makes it possible to develop the right solutions and systems. It is also about having the necessery understanding for the customers and the co-workers, who are able to offer technical advice and support, as well as develop and design these solutions.

We can document our solutions.
When you implement a solution, you must be able to trust its quality. That is why documentation and new technology plays an important role for us in our work to find the most intelligent solutions and functional products. These are continually tested in our own laboratories to insure the highest quality. Our product-programme is carefully described and documented - in catalogues and the programme CADvent, which is a part of Lindab's extensive softwarepackage, Lindab ITline.

Lindab laboratories insure a high quality
Quality is the key in choosing us as your business partner. Consequently, all our products are tested in our own air- and acoustic laboratories, where we combine the customers' ideas and views with our abilities and experience - before production begins. The laboratories enable us to conduct full-scale testing offering you a direct advantage.

We reserve the right to make changes

Logistics

Your time is valuable, and therefore it is crucial that we always deliver components on time. Never too late - and not too soon.

Delivery from hour to hour

To deliver on time - often from hour to hour- is a priority with Lindab. The key to our effective logistics system is our fully integrated online sales- and production system, which connects Lindabs divisions throughout the nation. That means, that your local Lindab division for all purposes will function as your main warehouse, and that you can order or pick up any components you may need from your local division.

Design

With a selection of more than 25,000 standard components and the possiblity of specialized solutions which can meet any need, Lindab helps secure a good indoor climate for everyone.

Good indoor climate is also design

If we want to make sure thousands of people have a good indoor climate, insuring their well-being every day of the year, it is not only a matter of delivering a product, which is efficient and economical. It is as much a matter of design.

We co-operate with architects and designers

Lindab knows that is it not enough that our solutions are efficient, they have to be beautiful and in harmony with the surroundings in which they are placed. Consequently, we have thoughout many years had a dialogue with our customers. Through a close co-operation with a number of renowned architects and designers, we have shaped diffusers and other visible and important details. One architect and industrial designer is Knud Holscher, who has won the Industrial Design award for his design of our diffusers.

We offer our clients special treatment

We are always up to the task. Besides our standard programme, we can design and produce components and solutions to suit your every need. We have divisions, who specialize in bespoke solutions. Tell us which component you need, and we will produce it. That is the only way we can achieve the perfect solution - every time - together.

Dialogue

1
2
3
4
5
6
7
8
9
10
11
12
13
14
15
16
17
18
19

Dialogue is the heart of our corporation. It is the dialogue with our customers and our suppliers - and that between co-workers - which is the central axis of all, that we do.

Dialogue is an important part of everyday life

It is the daily contact, which makes us better at: servicing our customers, co-operation, and developing new innovative products. Lindab is not just a supplier - we also function as the technical advisor, with regards to our product's function and we have to be able to fulfill the very different needs and wants of our customers.

We develop through close dialogue

It is only through the close contact with our customers that we are continuously able to develop better solutions. It takes two parties to keep a dialogue going, and Lindab never just sits waiting by the phone. In active co-operation, we follow up on your expectations. How else would we be able to meet them?

We know your needs

Lindab is a modern and innovative corporation with great experience and expertise within its field. With us you will be well equipped to meet the challenges and demands of the future.

Lindab - an international success

Lindab was founded in Sweden in 1959 and is divided into two business areas: Ventilation and Profile. Ventilation and Profile develop, produce and market ventilation- and building components in thin plated steel. Worldwide the corporatin has more than 4,100 employees distributed throughout 125 branches in 26 countries. In Denmark alone, 500 employees are working within the area of Ventilation, and 150 employees are working within the area of Profile. Our management system has been certified by ISO 14001 and ISO 9001 standards.

The success of our clients is our future

Today Lindab is one of the worlds leading suppliers to the ventilation business, and we want to continue to be so. We will continuously develop and strengthen the abilities we possess today: knowledge, logistics, design and dialogue - and in doing so, we will make the difference to ensure our customers continued success.

Simple.

We reserve the right to make changes

Areas of Production

Air duct systems

This area of production includes our complete programme of circular and rectangular ducts and fittings. Furthermore the production programme includes a large programme of roof hoods, dampers, silencers etc.

Read more in the catalogue: “Air duct systems”

Comfort Indoor Climate systems

The product area Comfort includes air- and waterborne indoor climate systems as well as silencers. The airborne systems, which you can read more about in this catalogue, includes among other things diffusers, VAV-systems and dampers.

The waterborne systems include active and passive chilled beams, facade systems, cooling panels, heating panels, regulators, protection against condensation etc.

Read more in the catalogue “Comfort - waterborne indoor clinate systems”.

Accessories and aids

By using our network of service centres throughout the country, you will be able to supply yourself with everything you may need to install a ventilation system - fans, filters, automatics, brackets etc.
We are close by.

Read more in the catalogue “Accessories”.

IT-solutions

We offer a unique pallette of programmes for construction, calculations, and dimensioning of ventilation- and indoor climate systems. This saves time and money for all parties in the project, and offers a more reliable, safe and efficient ventilation system.

Read more about IT-solutions on the next page.

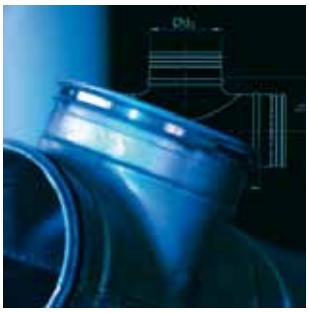

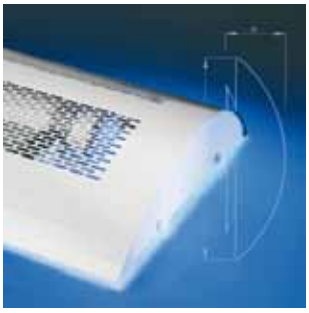

IT solutions

1 2 3 4 5 6 7 8 9 10 11 12 13 14 15 16 17 18 19

Time is an essential factor in the construction and dimensioning process for a ventilation installation. The faster and more freely you can move from one work process and software programme to another, the faster your work as a project engineer will go.

At Lindab, we know that your time is precious. We offer a number of intelligent and rational tools that make your day-to-day work easier. In short – they give you the opportunity to develop optimal and reliable ventilation solutions in the shortest possible time.

CADvent

An object-orient AutoCAD© application with a complete toolbox for drawing, dimensioning, calculation, quantification and presentation of complete HVAC installations.

- Quick and easy to use in both 2D and 3D
- The design features include dimensioning and calculation, and contain the most extensive and advanced toolbox on the market.
- Enables an engineer to quickly and easily implement radical design modifications in a ventilation system, with the automatic updating of the information.
- Quantification functions of incoming material - in total or per plane/zone.
- Neat and correct presentation of cross-sections and horizontal projections.
- Database containing the most common products on the market – complies with the Swedish Standard for information exchange.
- 4D – thereby joining time, the fourth dimension, to our project planning system – and into the project. This provides an opportunity for delivery planning, suborder scheduling and optimised project management.

DIMcomfort

Product selection and dimensioning programme for Lindab's supply and exhaust air units, low-velocity air units and grills. Based on user-determined requirements, the programme offers suitable product alternatives.

- The programme can be used as a separate product selection programme or can be integrated with CADvent.
- Allows quick selection of air units and grills.
- Provides correct dimensioning and placement of the products.
- Provides calculation support for noise and temperature, as well as simulations of the airflow from the devices.
- Possible to print printouts of selected products.
- Adjustment of supply and exhaust air flows to optimise the comfort level for the users in the room.
- Option to download from www.lindabcomfort.com

DIMsilencer

Product selection and dimensioning programme for Lindab's silencers provides extensive calculation support for efficient sound attenuation in duct systems. Based on user-determined requirements, the programme offers suitable product alternatives.

- Can be used as a separate product selection programme or can be integrated with CADvent.
- Quick selection of silencers that live up to predetermined requirements.
- Measured values for our silencers are according to Swedish Standard
- Complete system calculation from unit to room.
- Quick and easy to change requirements and conditions in order to find alternative solutions.
- Possible to print printouts of selected silencers.
- Options for downloading from www.lindabcomfort.com

Our new version of DIMsilencer is more user-friendly, contains new test result measurements – measured according to a new standard, and has a built-in room module which makes it possible to perform sound calculations adapted to the conditions in the room.

TEKNOsim

Our programme for indoor climate simulation is very user-friendly and can be used in all phases of the construction process. Ready structures for walls, windows, ceilings and floors, as well as other features, are selected from a database in dialogue boxes.

The programme is general, i.e. you can choose if the programme should dimension our products or not. When calculating the necessary cooling effect, you can choose between air cooling (100% convection) or any of Lindab's products (a mixture of radiation and convection).

Apart from calculating the effect requirements or resulting temperatures (air and operating), TEKNOsim also calculates the PPD index. Results are presented in both graphical and text form. All results can easily be exported to other Windows programmes, e.g. Word or Excel.
Option to download from www.lindabcomfort.com

Training and support

Lindab offers trainings and support for all of our software:

- Basic introductory course
- Support during installation and start-up
- Advanced training courses on our software
- Workshops held at your company

You can find more information on www.lindabcomfort.com or contact us at cadsupport@lindab.se

Our IT solutions are designed to facilitate and streamline your work. From the initial project, to the finished building – fast, easy and reliable!

We reserve the right to make changes

Overview

Lindab offers a complete range of indoor climate solutions which, apart from the waterborne climate systems, also include a large range of air-borne indoor climate systems (also, refer to the catalogue "Comfort 2006 - Airborne Indoor Climate Systems").

In combination or separately, the two product areas create the optimum conditions for an indoor climate solution, customised according to the current requirements and desires for comfort. This is exactly the reason why we have gathered the two types of indoor climate systems under the fitting name: Comfort. The name is not new; for many years, it has been closely associated with our airborne indoor climate systems.

Thanks to our many years of experience with waterborne indoor climate systems, we have been able to collect extensive documentation. Our experience with the products is supported by our laboratory in Farum, on the outskirts of Copenhagen, which offers possibilities to conduct full-scale testing.

The waterborne products allow the provision of relatively high cooling effects compared to conventional air-borne ventilation systems, without simultaneously causing draughts in the occupied zone.

The water-borne indoor climate systems can moreover be adapted to individual requirements. The active chilled beam Pilot (for more information, refer to Chapter 4) is one of the most recent examples of this.

Pilot is the result of complex research adapted to everyday use.

Pilot can be adjusted in four points and the adjustments can be done with the bottom plate still in place. This allows easy adjustment of the airflow and pressure. The slot opening on both sides of the beam can be adjusted with regard to both the width and length, thereby allowing very good control of the distribution patterns in the room. The simple adjustment, combined with the flexible water and air connections, allows you to include the beam in the drawings during the initial stages of the project, even before the final conditions are determined.

With the Waterborne Indoor Climate System product program, therefore, you obtain a large number of high-quality water-borne indoor climate solutions. They are all designed with the sole purpose of ensuring a pleasant and comfortable indoor climate. The simple and discrete design allows flexible integration in virtually all suspended ceiling solutions.

Chilled air systems without individual balancing dampers

When using induction-type supply air beams, the primary air (ventilation air) works as a motor. The primary air generates a secondary airflow through the beam's cooling battery, where the room air is cooled to the desired level.

This process depends on the pressure and flow of the primary air and means that both a higher pressure and a higher flow increase the cooling capacity.

The supply air that is to be distributed through the beam normally uses the available pressure at the beam's connection point, i.e. 50 to 100 Pa.

Since the relation between the pressure drop in the duct and the beam is quadratic relative to the flow changes, the flow is not affected appreciably in the event of minor changes in pressure.

By dimensioning the ventilation system, so that the bulk of the pressure drop for both duct and beam is above the beam, the system can regulate itself, thus making dampers redundant.

This leads to simplified planning, installation, adjustment and maintenance. The beams are normally supplied preset for the right pressure and flow.

Example 1.

All the beams are ordered for the same duct pressure as the difference between available duct pressure and beam operating pressure is < +/- 10%.

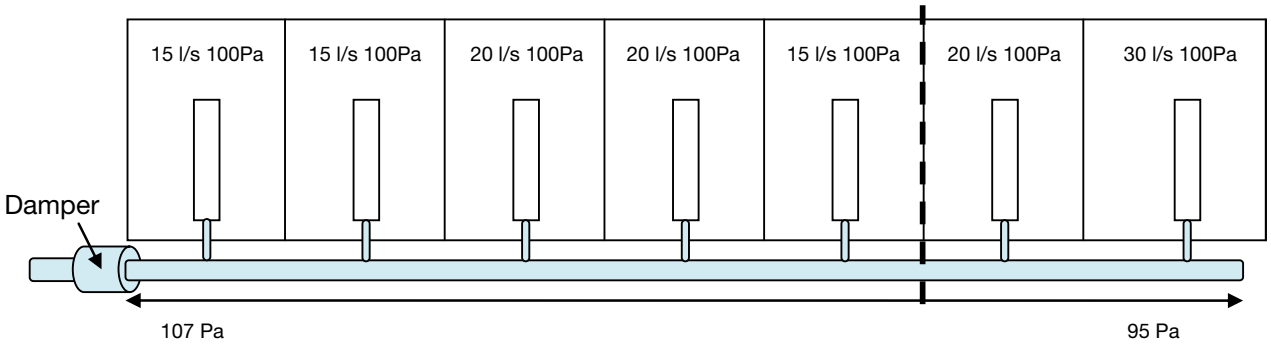

The airflow in the first room is 15.5 l/s (+3%), the airflow in the last room is 29.2 l/s (-3 %).

Example 2.

The beams are divided in 2 groups, with 10 beams per group, where the first group is ordered for 100 Pa and the second for 90 Pa. The difference between available duct pressure and beam operating pressure in each group is < +/- 10 %

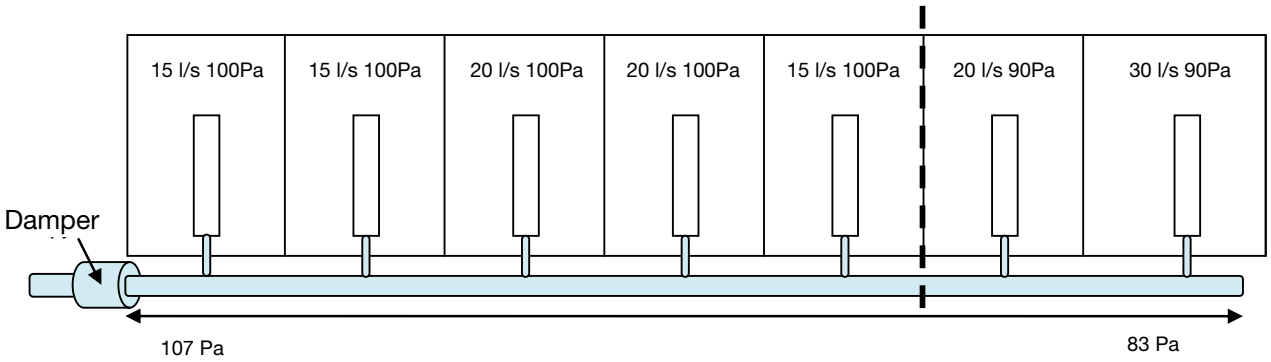

The airflow in the first room is 15.5 l/s (+3%), the airflow in the last room is 28.9 l/s (-4%).

We reserve the right to make changes

Ceiling Heating Guide

Contact, Overview, Index	1
Ceiling Heating/Chilled	**2**
Plexus	3
Professor	4
Pilot	5
Architect	6
Polaris I & S	7
Plafond	8
Podium	9
Celo	10
Cabinett	11
Capella	12
Carat	13
Fasadium	14
Atrium H & C /Loggia	15
Regula	16
Drypac™	17
Lighting	18
TEKNOsim	19

© 03.2009 Lindab Ventilation A/S. All forms of reproduction without written permission are forbidden. Lindab is the registered trademark of Lindab AB.
Lindab's products, systems, product and product group designations are protected by intellectual property rights (IPR).

Ceiling Heating Guide

Table of Contents

Introduction

Questions and Answers

Page

1. What affects the thermal climate experience? 20
2. How does ceiling heating work? 21
3. When can you use ceiling heating? 22
4. When is ceiling heating not advisable? 23
5. At what height can ceiling heating be installed? 24
6. Does ceiling heating affect the ventilation? 24
7. Will my head be too hot? 24
8. Will it be cold under the table? 25
9. Will there be a draught by the window? 25
10. What is the service life of Lindab Comfort's ceiling heaters? 26
11. Can a ceiling heating installation be modified when the activity is changed? 26
12. What effect should be installed? 27
13. Does ceiling heating save energy? 28
14. What does it cost? 28
15. Can Lindab Comfort's products be recycled? 30

In depth

Chapter

I. How people experience the thermal climate 31
II. This is how ceiling heating works 33
III. Where does a ceiling heater work well? 37
IV. Design requirements for a ceiling heater 38
V. Placement of the ceiling heater 43
VI. Temperature and the required installation height 45
VII. Effect and energy 48
VIII. Environment and recycling 51

Dimensioning key

Placement of the panels 53
Installation height and temperature 55

Quick facts

Quick facts – ceiling heating in a nutshell. 56

We reserve the right to make changes

Ceiling Heating Guide

Contents

At Lindab Comfort, we are often asked not only about our products, but also about ceiling heating, as a system, and heating principles in general. Unfortunately, ceiling heating is sometimes underestimated and misconceived as a form of heating. On the contrary, it is a very good form of heating. Far too good to be left to its own devices.

We have compiled this Guide to provide our customers and other interested parties with more information about ceiling heating. We hope that it will be useful to both project managers and purchasers who would like to find information fast, as well as to the ambitious designer who wishes to learn more about the subject.

In this Guide, which is based on a large number of Swedish and international references, the experience and measurements of purchasers and consultants, as well as our own calculations and measurements, we will demonstrate that:

- Ceiling heating heats the surfaces of the room via heat radiation. The surfaces, in turn, heat the air.
- Due to this, ceiling heating provides a very good thermal indoor climate.
- With ceiling heating, it is not too cold under the table or too hot on the head, and there is no draught from windows, as many people seem to believe.
- Ceiling heating works in virtually all types of premises, from large warehouses to small day-care centres.
- The ceiling heating system can be easily modified, if the activity in the premises changes; you do not have to worry about the heating system if you modify walls or the floor.
- Ceiling heating can be combined with any type of ventilation system.
- Ceiling heating is among the most energy-efficient systems on the market.
- Ceiling heating has a low investment cost compared to other systems. Combined with low energy consumption, it is an economical system in both the short and the long term.
- Lindab Comfort's ceiling heaters are up to 100% recyclable. Combined with their low energy consumption, this is good for future generations.

What other heating systems have all of these advantages?

The Ceiling Heating Guide is divided into three sections:

- The first, Questions and Answers, gives short and sometimes simplified answers to well-defined questions for those who do not wish to delve too deep.
- The second, In Depth, gives, as indicated by the name, a little more to chew over. This section sometimes requires knowledge corresponding to that of an HVAC engineer.
- The third, Dimensioning Key, provides a quick and easy aid for those planning a ceiling heating system.

1 2 3 4 5 6 7 8 9 10 11 12 13 14 15 16 17 18 19

Ceiling Heating Guide

1
2
3
4
5
6
7
8
9
10
11
12
13
14
15
16
17
18
19

Questions and Answers

Section 1

What affects the experience of the thermal climate?
The way we experience the thermal indoor climate depends primarily on our overall heat exchange with our surroundings. The heat exchange is affected by our physical activity, our clothing, as well as by the ambient thermal climate in the room. The thermal climate can be described by the temperature, velocity and humidity of the air and the thermal radiation exchange with the surrounding surfaces.

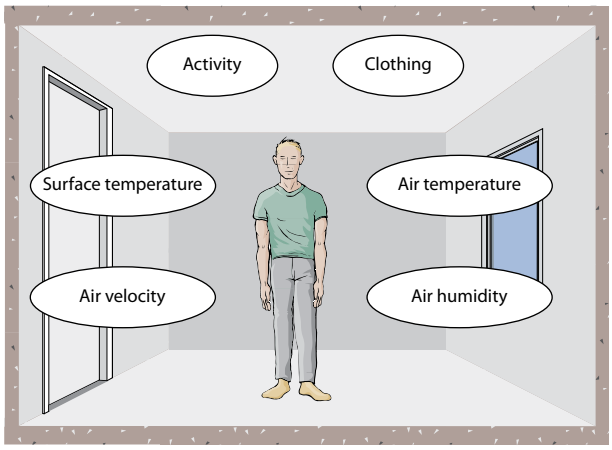

Factors affecting the thermal climate in the room.

Heat transfer
Heat can be transferred in four different ways: radiation, conduction, convection and phase transformation. Thermal radiation is what you feel, for example, from the sun or from a hotplate. Heat transfer by conduction is experienced when you walk barefoot on a cold stone floor. Convection is felt when you walk without a hat on a windy winter day. Finally, you feel phase transformation when moisture evaporates from the body, i.e. when it passes from a liquid state to a gas state and the skin is chilled.

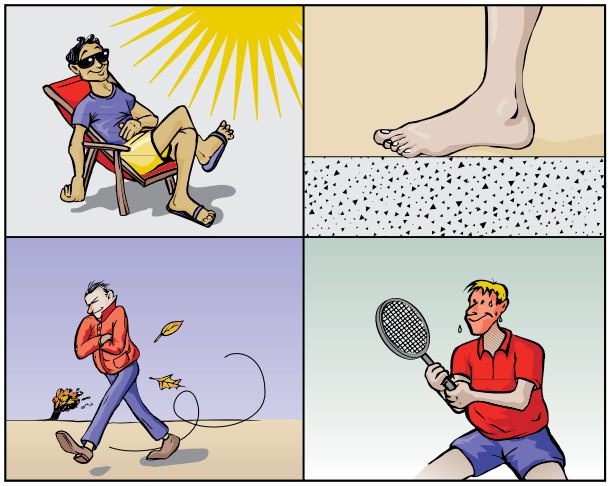

Heat is transferred in four different ways.

Heat, however, is always transferred, if there is a temperature difference between two bodies. A human body, for example, radiates heat to its surroundings all of the time. A hand or a face (approx. +33°C) continuously gives off heat through radiation to surrounding walls and furnishings (approx. +22° C), without you being directly aware. Heat is also given off by convection from the skin when air near the body is heated and rises.

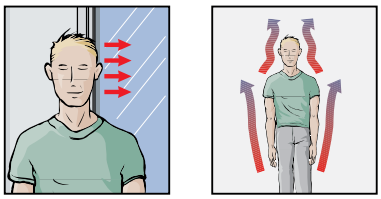

Heat is always given off by the body.

Thermal comfort
Thermal comfort means that a person on the whole feels to be in a state of thermal balance, i.e. that he or she is neither too hot nor too cold. Furthermore, thermal comfort presupposes that there is no unwanted heating or cooling of individual body parts, such as draughts to the neck or too warm a floor.

A person's heat balance, and feeling of comfort indoors, is primarily affected by:

- Convection directly to the surrounding air through skin and lungs.
- Radiation exchange with surrounding surfaces.

These two methods of heat transfer are approximately equal in size, for normal air movements in a room. Therefore, we are affected just as much by the temperatures of the room surfaces as by the temperature of the air.

If the temperature of the room surfaces increase completely, or in part, the air temperature decreases by an amount corresponding to the increase in the mean temperature of the room surfaces. If, for example, we heat a room with a ceiling heater, the mean temperature of the room surfaces will be higher. People then radiate less heat through radiation to their surroundings. To avoid being too hot, the body can compensate by increased convective heat transfer to the colder room air.

This is the background for why it is possible to have a lower air temperature with radiant heating than with conventional heating, and at the same time achieve thermal comfort. (For an in-depth study, refer to Chapter I)

We reserve the right to make changes

Ceiling Heating Guide

Questions and Answers

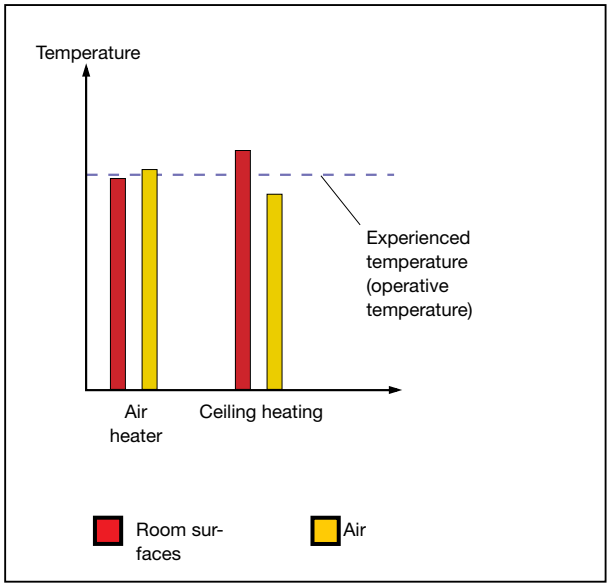

Ceiling heating provides warm room surfaces and therefore allows a lower air temperature.

Section 2

How does ceiling heating work?

Hot air rises, so why place the "radiator" on the ceiling? Yes, this is a common question from people who are doubtful about ceiling heating. In this section, we will try to explain how ceiling heating works and why it gets warm in the whole room and not just near the ceiling.

The heating system gives off heat to the surroundings through a mixture of convection and heat radiation. Convection heats up the air close to a heater, whereas thermal radiation is distributed in all directions within the room. The convectively heated air rises in the room, whereas the heat rays "travel" straight from the heater until they meet any of the surrounding surfaces.

The ceiling heating system is based on a high share of thermal radiation and a low share of convection. Typical values are approx. 60% radiation and approx. 40% convection. Lindab Comfort's ceiling heating system is water-borne and based on thermal radiation at low temperatures (30 to 80° C). This means that you do not experience the thermal radiation as intensely as the radiation, for example, from the sun or an electric infrared heater.

The convection share for a ceiling heating system (approx. 40%) corresponds roughly to the share of heat losses through the building's climate shell, such as the heat losses through the ceiling; i.e. the other parts of the building benefit directly from the rest of the energy that is given off by a ceiling heater (the radiation share).

You can compare thermal radiation with normal light. It is distributed and reflected in approximately the same way;

i.e. heat is radiated from the ceiling heater towards all the surfaces it can "see". Since part of the thermal radiation is reflected, just like visible light, against all the surfaces and since there is a radiation exchange between room surfaces that have different temperatures; even surfaces that are "shaded" from the thermal radiation are heated. Hence, the temperature difference in the room and different surfaces continuously strives to even out. As a result, the room receives a very even temperature spread between the ceiling and the floor.

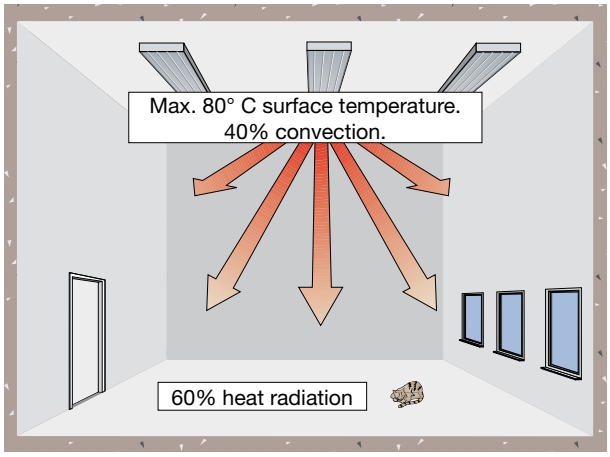

Distribution of radiation and convection for Lindab Comfort's ceiling heaters.

The surfaces, to which the radiant heat is transferred, are heated to a temperature that is higher than if conventional heating is used. For example, inner walls will normally stabilise at a surface temperature above the room's air temperature. A rarely noticed advantage of radiant heat from the ceiling is that it heats the floor! The floor temperature is normally 2 to 3° C above the air temperature at ankle height.

In other words, when you have ceiling heating installed, it is not difficult to have satisfied tenants!

The heat given off by the ceiling heater and experienced by a person, therefore, comes primarily from the indirect heat radiated by the surrounding surfaces. Only a very small part comes directly from the ceiling-heating panel itself. This experience of the thermal climate is due to the smaller heat loss from the human body to the surroundings, when the surrounding surfaces are warmer. In other words, it is not enough if only the air around us is warm! Also, refer to Section 1.

1 2 3 4 5 6 7 8 9 10 11 12 13 14 15 16 17 18 19

Ceiling Heating Guide

1
2
3
4
5
6
7
8
9
10
11
12
13
14
15
16
17
18
19

Questions and Answers

A big advantage of radiant heating is that the colder a surrounding surface is, the more heat energy it will attract to itself. This means that radiant heating spreads automatically, so that colder surfaces, e.g. windows or poorly insulated wall sections, receive a greater share of the heat, i.e. the heat ends up where it is needed the most. (For an in-depth study, refer to Chapter II)

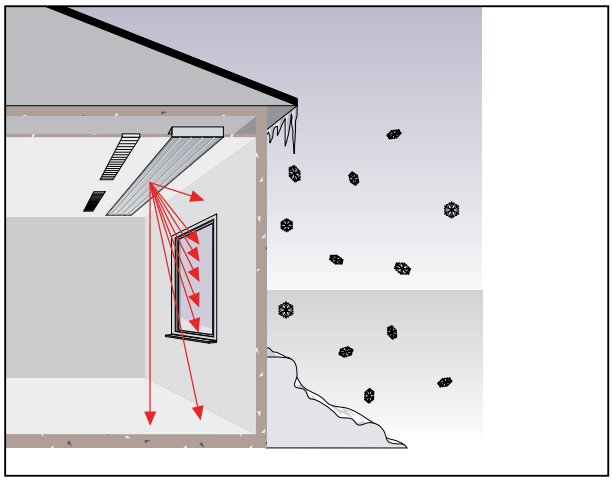

Thermal radiation goes where it is needed the most.

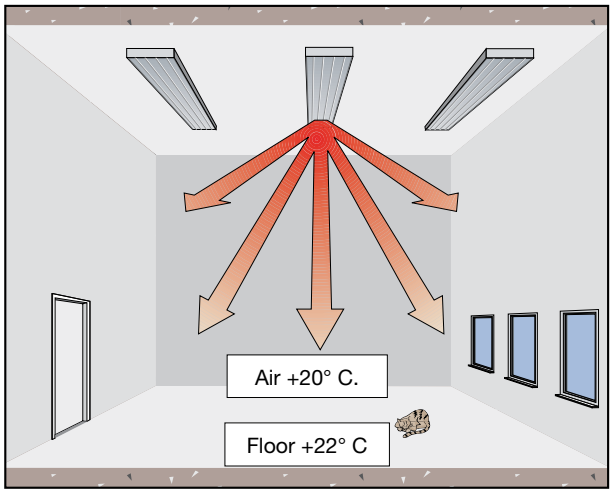

Ceiling heating provides a warm floor!

Section 3

When can you use ceiling heating?
Ceiling heating has a very wide range of application, wider than most other forms of heating. It can be said generally that ceiling heating can be used to heat nearly all types of premises. Ceiling heating is used mostly in large premises, such as sports centres, workshops, industrial halls, warehouses and shopping centres. However, ceiling heating also works excellently in premises such as day-care centres, nursing homes, residential homes, schools and laboratories.

The output of a ceiling heater is divided into approx. 40% convective (heat to the ceiling) and approx. 60% radiant heat (heat downwards). Buildings normally have the same distribution of heat losses through the walls, ceiling and floor, i.e. approx. 40% of the heat is lost through the ceiling and the other 60% through the rest of the building. This is why ceiling heating, together with its other advantages, is ideal for heating nearly all types of buildings.

Domestic residences are one area where ceiling heating is installed very rarely. A major reason for this is probably that home heating is based on strong traditions. However, it has been demonstrated in studies that ceiling heating panels, combined with outdoor air terminals for the exhaust air system, give very good climatic results compared to conventional radiator systems. In one trial, the ceiling heating panels were mounted on the ceiling directly above the window in a bedroom. Outdoor air was sucked through a grill in the outer wall and was preheated between the ceiling and the ceiling panel.

In summary, it was established that:

- The supply air was heated on average to 15.5° C, with an outdoor temperature of -2° C.
- The operative temperature was on average approx. 1.1° C higher than for a corresponding reference room with panel radiators.
- No draughts were ascertained (the window was heated by the ceiling heater; also refer to Section 9).

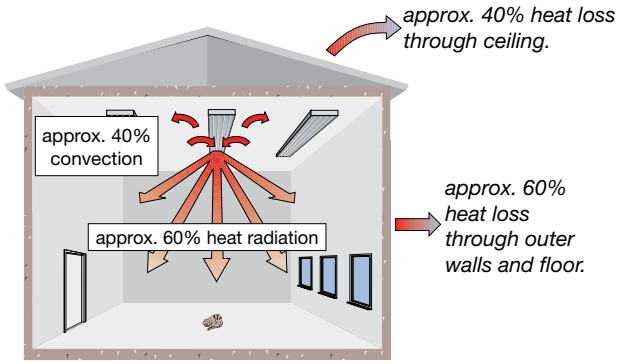

Distribution of the heat produced from ceiling heating and from a building.

We reserve the right to make changes

Ceiling Heating Guide

Questions and Answers

Ceiling heating also works well in premises where people sit to perform concentrated work, as well as in premises where people stand or move around. The ceiling height, in practise, has no importance; either upwards or downwards, for the provision of a warm climate in the occupied area (refer also to Chapter 5 and 7).

Zone heating
Ceiling heating also provides excellent results if only part of a room needs heating, so-called zone heating. For example, work places can be arranged in the premises, where the activity requires a low temperature. Radiant heating can then contribute to an increase in the experienced temperature (the operative temperature) through a local increase in the temperature of the surrounding surfaces and, to a certain degree, in the air temperature, thereby creating a more tolerable working environment.

Other advantages of ceiling heating:
A big advantage of ceiling heating is that the heaters are "out of the way". The placement of furnishings, machinery and other equipment does not usually need to be taken into consideration, and the ceiling heating panels do not take up any space on the walls or the floor.

Ceiling heating panels and heating strips are also relatively easy to move, if a room is to be used for other activities or if walls are to be moved.

In schools and public premises, for example, the heaters are not accessible for tampering.
(For an in-depth study, refer to Chapter III and Chapter VI)

Section 4

When is ceiling heating not advisable?
There are not many cases where ceiling heating does not work, but each technology has its limitations. The following example illustrates the limitations of ceiling heating:

Ceiling heating does not work any better than other heating systems in preventing air leakage through open doors. The floor, walls and any furnishings close to the door are heated, of course, but ceiling heating does not prevent air leakage through an open door. However, ceiling heating contributes towards providing the best possible thermal climate in the zone around the door by keeping the surfaces warm, as cold air flows in when the door is open.

In high towers, e.g., a lighthouse, ceiling heating works less well also, as very little of the radiant heat that is given off reaches the floor and the occupied zone. However, this is not caused by the long distance to the floor but by the fact that the floor occupies a relatively small part of the total surface "seen" by the ceiling heater. A large part of the thermal radiation will be absorbed by the wall surfaces.

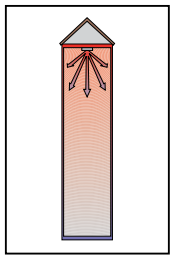

Ceiling heating provides poorer results in high narrow spaces.

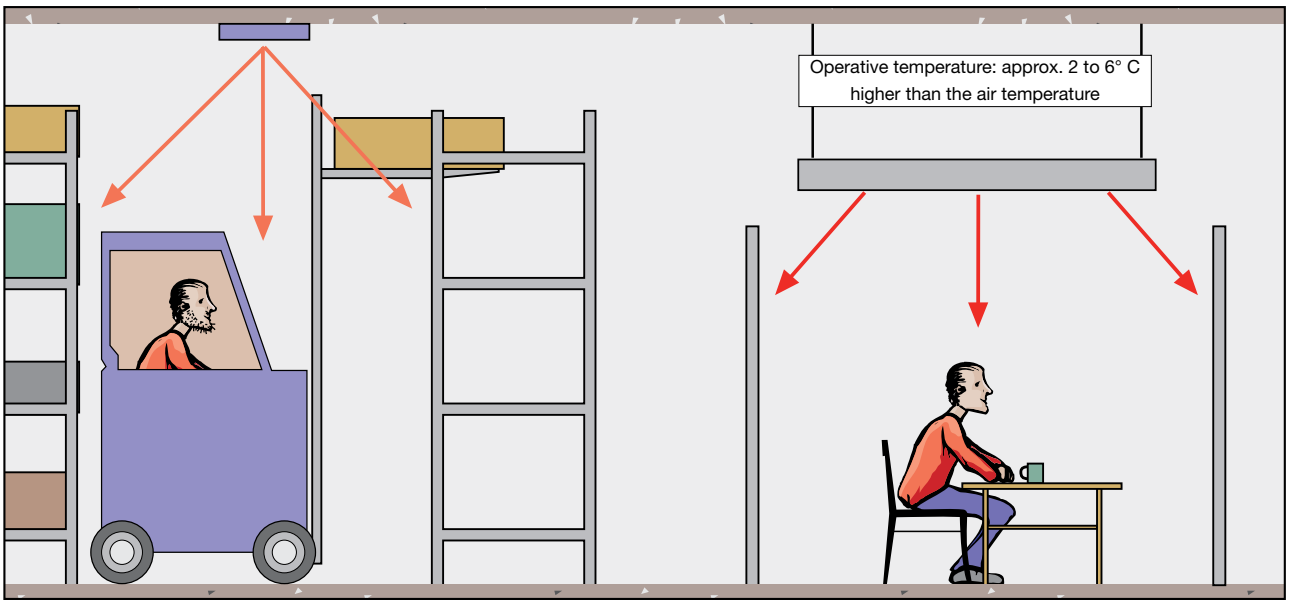

Zone heating provides a higher operative temperature in part of the room.

Ceiling Heating Guide

1
2
3
4
5
6
7
8
9
10
11
12
13
14
15
16
17
18
19

Questions and Answers

Section 5

At what height can ceiling heating be installed?
As long as the air in the room is of normal cleanliness, there are no limitations, other than the building itself, for the height the ceiling panels can be installed. The radiant heat is not obstructed by the air and is distributed towards the floor, walls and furnishings irrespective of the installation height and the surface temperature of the ceiling heaters.

However, there are limitations for how the low ceiling heating can be installed. Factors that play the greatest role for the lowest possible installation height are the surface temperature of the ceiling heater, followed by factors such as the heater's length/width ratio, and whether the occupants of the room are sitting or standing. The warmer the surface is, the greater the installation height for the ceiling panel must be for a person below the panel not to experience any discomfort. However the limitations to the lowest possible installation height are moderate, refer to Section 7.

An example to prove this:
A ceiling heating panel with the dimensions 3.6 x 0.6 and a maximum surface temperature of 50° C (55/45° C system) can be installed as low as 2.1 m (!). If the surface temperature increases to 70° C (80/60° C system), the lowest installation height is 2.8 m.

In this connection, it is important to point out that we are talking about here are design heating temperatures that statistically occur only a few days per year. During most of the year, the heating temperature in the system is lower.
(For an in-depth study, refer to Chapter II and IV)

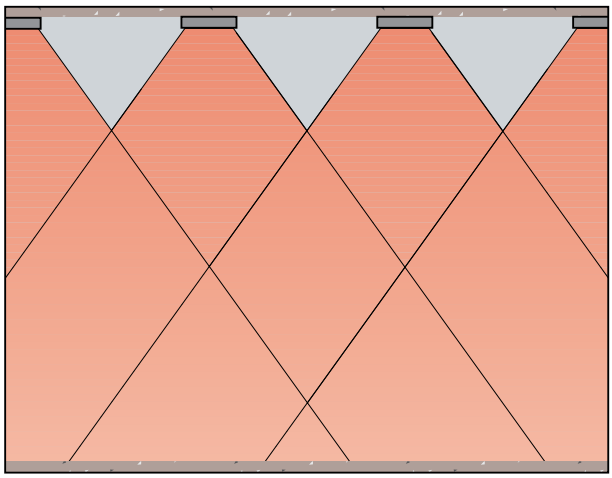

The ceiling height plays no role; all radiant heat reaches all walls and floors. It is only the intensity that diminishes with the height.

Section 6

Does ceiling heating affect the ventilation?
Ceiling heating in itself does not cause any air movements that can affect any form of ventilation. This means that ceiling heating is perfect for premises where there are high requirements on the control of the airflow.

This also means that you have a free hand in selecting the type of ventilation system to be used in combination with ceiling heating, when you plan new buildings or renovate existing buildings and rooms.

For an in-depth study, refer to Chapter V)

Section 7

Will my head be too hot?
The radiant temperature asymmetry (RTA) is a concept used to define the temperature differences on different surrounding surfaces a person can accept without experiencing discomfort. RTA is noticed if, for example, you turn one side of your face against a warm fireplace and the other towards a cold window.

RTA is measured over a small area with a height of either 0.6 m, which corresponds to a sitting person, or 1.1 m, which corresponds to a standing person. RTA is the difference between the thermal radiation on each side of the measurement area.

As previously mentioned in Section 2, thermal radiation from the ceiling heater warms the surrounding surfaces and especially the floor. As a result, the RTA is balanced out. An important factor for the RTA to be within acceptable limits, however, is that the ceiling heater is dimensioned correctly, with regard to its maximum temperature.

If this prerequisite is met, the RTA will be within the limits for a comfortable indoor climate as provided for by the Guidelines (R1) of the Swedish Indoor Climate Institute and the International Indoor Climate Standard IS0 7730.

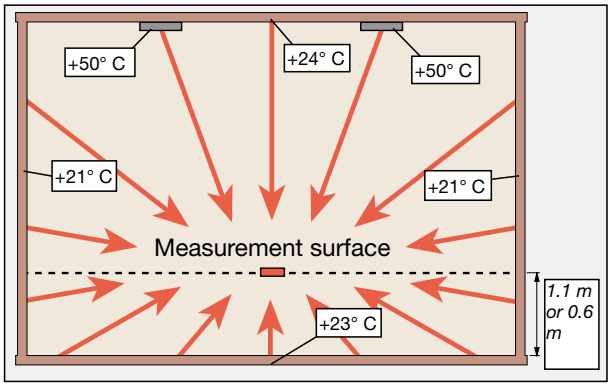

Example of how radiant temperature asymmetry (RTA) is measured. RTA is the difference between the thermal radiation on each side of the measurement surface. The temperatures are given only as an example.

We reserve the right to make changes

Ceiling Heating Guide

Questions and Answers

Section 8

Will it be cold under the table?
It is a widespread misconception that when ceiling heating is used as the heating system, it will be cold under the table and any other horizontal surfaces. The chances of it being cold under a table are the same of it being pitch dark under a table when the ceiling lamp is on.

Thermal radiation spreads to surrounding areas in the same way as light rays from the ceiling. These surfaces absorb most of the heat energy, but also reflect a small part of it. This part of the thermal radiation "bounces" around to the different surfaces in the room and heats the surrounding surfaces, including the floor under the table. Even the top and underneath of the table are warmed by direct and indirect thermal radiation. This means that the difference in air temperature or radiant temperature is extremely small under the table compared to next to the table.

(For an in-depth study, refer to Chapter II)

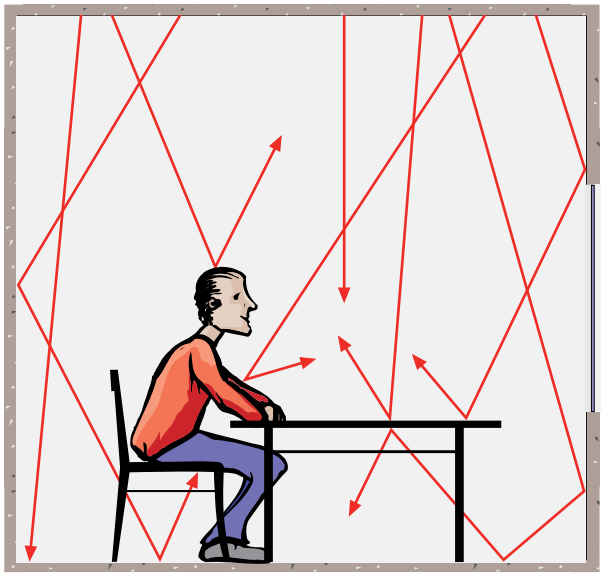

The thermal radiation is partially reflected and it cancels out the difference in temperature.

Section 9

Will there be a draught by the window?
With double and triple-glazed windows, there can be a risk of draughts (i.e. air movements caused by air that is cooled against a cold surface), if there is no heat source by the window to counteract the downward air stream. The heat source, however, does not need to be located under the window. A radiator under a window results in a warm rising air stream that should counteract any draught from the window. On the other hand, ceiling heating prevents draughts at their source, i.e. the cold surface of the window. The ceiling heaters namely heat the surface of the window, so the risk of draughts is minimised.

In other words, the ceiling heating heats up cold surfaces directly via heat radiation. As mentioned in Section 2, the thermal radiation is distributed among the room surfaces in proportion to their surface temperatures; i.e. more heating effect goes to colder surfaces. Thermal radiation from the ceiling will therefore heat, in part, the window surface and window bay and, in part, the windowsill. In this way, draughts from the window are eliminated directly at "source", in part, due to the warmer window surface and, in part, due to the heating effect of the window bay and the windowsill.

The greatest risk for experiencing discomfort from draughts is borne by people with sedentary work, dressed in light indoor clothing, who have their work places near an outer window and are without a heat source to counteract any draughts. With standing work or work "on foot", away from an outer window, the risk is non-existent, especially in newer premises with triple glazing. *(For an in-depth study, refer to Chapter II)*

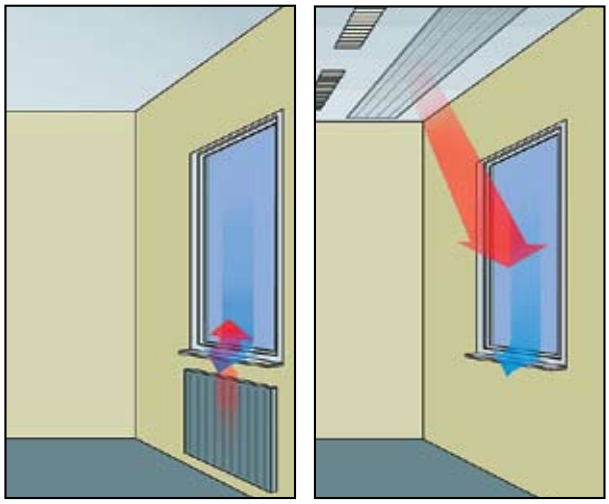

The ceiling heater prevents draughts by heating the window surface.

1 2 3 4 5 6 7 8 9 10 11 12 13 14 15 16 17 18 19

Ceiling Heating Guide

1
2
3
4
5
6
7
8
9
10
11
12
13
14
15
16
17
18
19

Questions and Answers

Section 10

What is the service life of Lindab Comfort's ceiling heaters?
Lindab Comfort's basic element, our world patent, is used in heating and cooling systems, as well as in solar collectors throughout the world, where temperatures are up to 250° C. At the Technical Research Institute of Sweden, surfaces have been tested at over 200° C, shock cooling them afterwards with 10° C water. The surfaces have also been left outdoors, and after several years, they have been taken in and tested again. The surfaces have also been pressure-tested at a pressure of 10 to 11 bar – 16,000 times! None of these tests has affected the quality or performance of the product.

We do not know a product on the market that has been as thoroughly tested as the products of Lindab Comfort. We therefore dare say that Lindab Comfort's ceiling heaters can function for as long as the building in which they are installed.

(For an in-depth study, refer to Chapter IV)

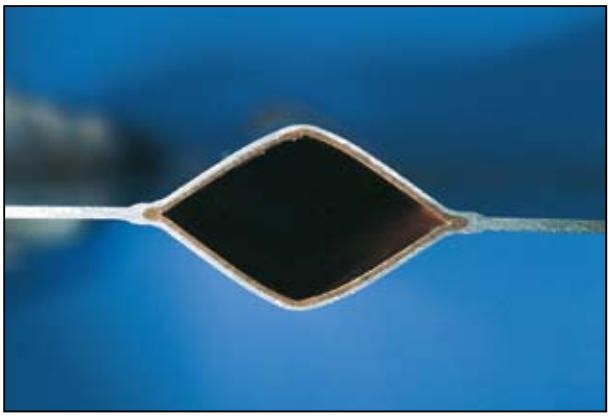

Cross-section of the water duct of Lindab Comfort's ceiling heater.

Section 11

Can a ceiling heating installation be modified when the activity is changed?
Nowadays, it is common for a building and its interiors to undergo many changes during the building's service life. It is therefore necessary to be able to modify and move both walls and installations without the costs being too high.

In this respect, ceiling heating offers great advantages. The piping system is often fitted visibly or in an easily removable suspended ceiling, which makes it easy to dismantle or rebuild. If the ceiling heaters are installed in a cassette ceiling, they can be easily switched with ceiling cassettes in the places where the ceiling heaters are needed. If they are suspended, it is also easy to dismantle and move them to another place.

There is also an advantage only offered by Lindab Comfort's ceiling heating products. They have the lowest weight on the market, which means that modifications in the ceiling heating installation, especially at very high ceiling heights, are extremely easy.

Property owners/managers are not bound to a special type of tenant. They can switch, for example, between a manufacturing industry, a dance studio and a warehouse. You do need to take the heating system into consideration when renovating or rebuilding the floor or the walls.

We reserve the right to make changes

Ceiling Heating Guide

Questions and Answers

Section 12

What effect should be installed?
When calculating the design heating effect requirement, the different parts of the building are calculated first, with regard to area and total heat transfer coefficient (U value). This is normally calculated in accordance with the existing building regulations and the Swedish Standard. In addition, it is calculated what the indoor temperature and the design outdoor temperature, DOT, should be. The latter is normally calculated according to the Swedish Standard. A calculation of the design heating effect can then be made for the building.

However, you should consider during the calculations that there is a temperature difference between the ceiling and the floor (temperature gradient). The temperature gradient can result in large temperature differences between the floor and ceiling at high ceiling heights. One of the great advantages of ceiling heating is that the temperature gradient is small compared to other heating systems, approx. 0.5°C/m. This results in small temperature differences between the ceiling and the floor. Heating with, e.g. a fan heater (Aerotemper) results in a temperature gradient of approx. 2° C/m. A small temperature gradient naturally results in a lower heating effect requirement, as the indoor temperature by the ceiling is lower.

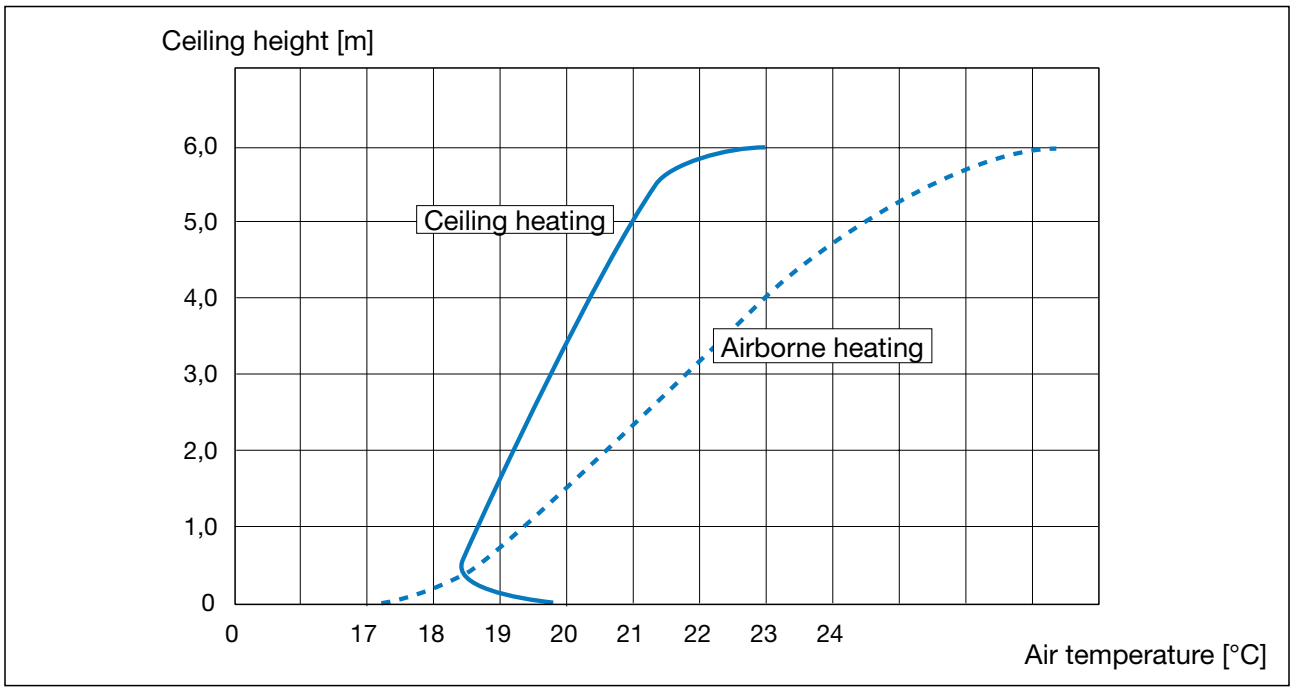

Example of temperature distribution in the air in a room with different heating systems.

Ceiling Heating Guide

1
2
3
4
5
6
7
8
9
10
11
12
13
14
15
16
17
18
19

Questions and Answers

Apart from the low temperature gradient, with ceiling heating you can also normally reckon with approx. one to two degrees lower indoor temperature with new construction, due to the radiant supplement from the surrounding surfaces (refer to section 1 and 2). In this way, you can lower the installed heating effect. However, when rebuilding or renovating, you should perform a more accurate analysis to see if the building's standard, after the work and activity in it, is such that you can reckon with a lower indoor temperature.

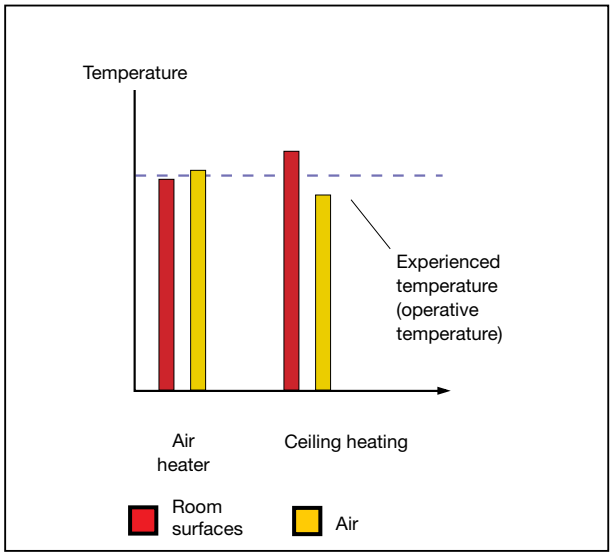

Ceiling heating provides warm room surfaces and therefore allows a lower air temperature, resulting in a lower heating effect requirement.

An example can explain the difference in output requirement due to a lower indoor temperature and a smaller temperature gradient; assume a newly-built hall of 1000 m² with a ceiling height of 5 m and normal wall, ceiling and floor structures. The window area corresponds to 10% of the floor area. The necessary heating effect for transmission and involuntary ventilation for two different heating systems will then be, as follows (heating effect for ventilation is not included):

Heating system	Temp. in occup. area/gradient	Heat output
Fan heater (Aerotemper)	20° C / 2° C/m	71.3 kW
Ceiling heating	18° C / 0.5° C/m	58.5 kW

The ceiling heating system therefore requires only 82% of the heating effect, compared to fan heater system, in this example. It should be stressed that the difference is smaller in premises with lower ceiling heights.
(For an in-depth study, refer to Chapter VII)

Section 13

Does ceiling heating save energy?
In the vast majority of cases, you can say yes to this question when you compare ceiling heating with other conventional heating systems. The energy saved by ceiling heating is partially dependent on its ability to maintain a lower air temperature in the occupied area (approx. 1 to 2° C) without lowering the experienced (operative) temperature and partially on the smaller difference between the temperature of the ceiling and the floor (the temperature gradient, refer to Section 1 and 12). The second factor contributes to a smaller air cushion on the ceiling, which would otherwise result in large heat losses through the ceiling.

The type of building and what the previous heating system was, if any, determines how large the energy saving will be. For buildings with a ceiling height of 2 to 3 metres, you can count on a saving of 2 to 7%. For buildings with higher ceiling heights, the energy saving can be even greater, especially if the building is old, has leaks or big doors or openings that give a large proportion of air leakage (involuntary ventilation). Savings of up to 30% have been documented in both Swedish and foreign research reports.

(For an in-depth study, refer to Chapter VII)

Section 14

What does it cost?
The answer to this question differs, depending on the time perspective and the costs that are to be included. We have chosen a long-term perspective, in this case 15 years, since then the overall cost picture, in most cases, is more interesting for the manager or property owner. However, if you only look at the investment costs in the example, ceiling heating is the second cheapest.

The example shows the total cost calculation for four different heating systems. The systems are ceiling heating, floor heating, fan heating (Aerotemper) and air heating.

The preconditions for the calculation are also presented and are based on an assumed new-built industrial hall with dimensions of 60 x 40 m and a ceiling height of 8 m situated in Gothenburg, Sweden. The hall is assumed to be connected to Gothenburg's district heating network. The investment costs include materials and labour costs, including connection charges for the district heating and adjustment work for the respective heating systems. The investment costs for the different heating systems, including the ceiling heating system, have been calculated by an independent consulting firm.

Annual operating and maintenance costs (O&M) are calculated as a percentage of the investment and include electricity and maintenance and repair costs. For ceiling and floor heating, these are assumed to be 0.5% and for fan heating and air heating to be 2% of the investment cost. The energy consumption for the different heating systems, including the heating energy requirement for transmission and involuntary ventilation, has been calculated under the assumptions given below. The energy requirement for ventilation is not included as it is assumed to be equal for all the heating systems.

We reserve the right to make changes

Ceiling Heating Guide

Questions and Answers

The total cost for the respective systems, including investment cost, operating and maintenance costs and energy costs. The total cost is presented in part as a present value and in part as annual payment.

Common prerequisites:	
Cost of capital:	10%
Economic service life:	15 years
Energy price:	450 SEK/MWh
Energy price increase:	2% per year

				Total cost	
Heating system	**Investment (SEK)**	**O&M (SEK/ year)**	**Energy consumption (MWh/year)**	**Present value (SEK)**	**Annual payment (SEK/year)**
Ceiling heating	840,00	4,200	386	2,373,000	311,997
Floor heating	945,000	4,725	375	2,439,000	320,703
Fan heating	777,000	15,540	488	2,792,998	367,206
Central air heating	2,170,500	43,410	431	4,176,810	549,141

Costs for different heating systems. Investment costs have been calculated by an independent consulting firm.

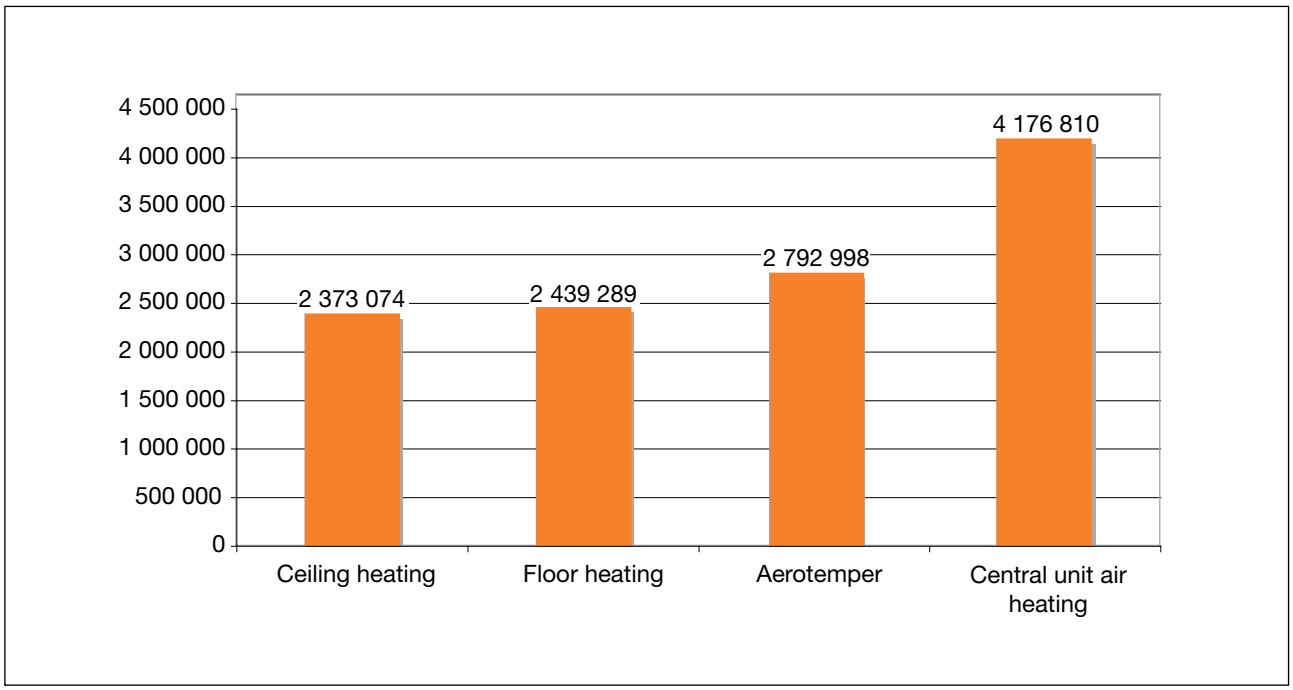

Present value of total costs for four different heating systems.

Ceiling Heating Guide

1
2
3
4
5
6
7
8
9
10
11
12
13
14
15
16
17
18
19

Questions and Answers

Calculation conditions:

U value	ceiling:	0.2 W/m², °C
	walls:	0.2 W/m², °C
	floor inner zone:	0.3 W/m², °C
	floor outer zone:	0.3 W/m², °C
	windows:	2.0 W/m², °C
Area	ceiling:	2,400 m²
	walls:	1,400 m²
	floor inner zone:	1,000 m²
	floor outer zone:	200 m²
	windows:	200 m²

Ceiling height: 8 m
Involuntary ventilation: 0.3 qty/h

	Ceiling heating	Floor heating	Fan heating	Air heating
Indoor temp. occupied area (°C)	19	19	20	20
Temperature gradient (°C/m²)	0,7	0,5	2,0	1,0

Other conditions:

1) Ceiling heating and floor heating require a lower air temperature, 19 °C, to maintain a certain operative temperature, which in this case is assumed to be 20° C.
2) The indicated temperature gradient applies at the design outdoor temperature. At other outdoor temperatures, it is assumed to drop linearly until it is zero - when there is no heat requirement.
3) The temperature gradient for air heating applies when so-called tropic fans are installed.

Section 15

Can Lindab Comfort's products be recycled?
Life cycle analyses (LCA), which have been made for aluminium products, show many common features. The material's production stage (mining, concentration and production) have a relatively high load factor, with respect to both energy and environment. Compared to other materials, the reverse situation is observed in the product utilisation stage. The load of the aluminium products in the production stage is compensated for many times over by their lower environmental impact in the utilisation stage.

Moreover, if the aluminium is recycled, the impact on the environment from the production stage is further reduced to a corresponding degree.

Lindab Comfort's ceiling heating systems consist exclusively of copper, aluminium, an insulating sheet of expanded polystyrene and a small amount of tin solder. All component materials, excluding the insulating sheet, are up to 100% recyclable. All production waste goes for recycling, even today.

When a building, where Lindab Comfort's ceiling heating products are installed, is demolished, 100% of the metals in them can be recycled. The aluminium and copper are bonded metallurgically in the manufacturing process and cannot be separated, but nevertheless recycling is still possible. The ceiling heaters are pressed in to a package of approx. 20 x 20 cm and are used in the metal industry as alloying materials in different qualities of aluminium. The copper proportion is well defined for each of the packages, as each centimetre of the panel contains the same percentage of copper.
(For an in-depth study, refer to Chapter VIII)

We reserve the right to make changes

Ceiling Heating Guide

Chapter I.

How people experience the thermal climate

Heat exchange
A person's heat exchange with the surroundings depends on activity, amount of clothing and on how much heat is transferred to the surroundings, above all by convection and radiation. Some heat is given off in the form of latent heat as water vaporises. This heat is normally not supplied to the room, but is transferred to outdoors through condensation.

Activity
Activity or metabolism determines how much heat is generated in the body. It is expressed in the unit met (1 met = 58 W/m2). An individual's degree of activity indoors normally varies between 0.8 met (sleeping) and 7 met (hard physical work). Common values for normal office activity is 1.1 to 2.2 met. The metabolism of a person doing a certain type of work is also determined by individual factors such as age, weight, sex, health, etc.

Amount of clothing
The amount of clothing is a measure of the human body's heat insulation and is expressed with the unit clo (1 clo = 0.155° C m2/W). It varies between 0 clo when naked and approx. 3 clo under thick bedding. Common indoor clothing falls in the range of 0.7 to 1.2 clo.

Personal heat exchange
Personal heat exchange normally takes place primarily through convection and radiation. These are roughly equal at small air velocities. When air passes by the skin at a higher velocity than approx. 0.1 m/s, the convective heat transfer gradually increases. If the person becomes too hot and begins to sweat, a significant amount of heat is also given off by moisture evaporating from the body (phase transformation). In a state of thermal comfort, the sweat production is very little and the moisture that nevertheless evaporates from the skin is reckoned with the convective heat given off. Air humidity affects the amount of moisture that evaporates from the skin and the mucous membranes. The drier the air, the greater the amount of moisture that is given off by the skin and the mucous membranes.

Convection
The convection that a person is exposed to consists, in part, of natural convection, which occurs due to people heating the air around the body, which then rises and causes air movement and, in part, of forced convection, which is external air movements, e.g. from ventilation or draughts. The limit for unpleasant air velocity depends primarily on the surrounding temperatures. The normal limit indoors is therefore 0.15 m/s in the winter and 0.2 to 0.4 m/s in the summer [8], see page 34. The higher value during the summer is because the room temperature is often higher during the summer months. Thus, the limit for unpleasant air velocity is also higher.

Radiation
Radiation takes place as a net exchange between two bodies/surfaces and in most cases goes from a person to the colder surroundings. The amount of heat transfer by radiation depends on the person's activity and amount of clothing, as well as on the surface temperatures of the surroundings.

Temperature
As regards the temperature of the air and the surrounding surfaces, there are a number of different temperatures that are defined to describe the effect on people. The most common ones are presented below.

Apart from room temperature, there are also:
Vertical temperature gradient (°C/m): a measurement of how much the air temperature changes at different heights above the floor. Normally defined as the temperature difference between a height of 0.1 m and 1.1 m. The temperature gradient should be less than 2 to 3° C/m to avoid discomfort. The lower value is used for sedentary work. It should, however, be pointed out that a temperature gradient of 2 to 3° C/m causes significant layering of the air and thereby large energy losses at ceiling level. The temperature gradient for Lindab Comfort's ceiling heaters is normally within the range of approx. 0.4 to 0.5° C/m, which results in a significant reduction in energy losses at the ceiling level. Also, refer to Chapter VII.

Plane radiation temperature (°C): used to determine the radiation exchange for a small plane surface (skin section) that faces a specific direction. Radiation exchange depends on the surface temperature and the angle factor from the sub-surface concerned, which can be "seen" by the plane surface. The plane radiation temperature is calculated using the measured surface temperatures and angle factors or is measured with a radiation temperature meter.

Radiant temperature asymmetry (°C): Radiant temperature asymmetry (RTA) is defined as the difference in the plane radiation temperature on each side of a small flat surface. RTA is measured in a plane at 0.6 m above the floor level when sitting and 1.1 m above floor level when standing. Where the thermal radiation comes from the ceiling, the maximum value for the RTA should be 5° C. Also, refer to Chapter VI.

Mean radiation temperature (°C): a measurement to determine the body's total radiation exchange with the surrounding surfaces. The mean radiation temperature refers to the mean value of the radiation exchange in all directions.

Operative temperature (°C): describes the overall effect of the air temperature and the mean radiation temperature on an individual's heat balance. The operative temperature is often assumed to be the mean value of the air temperature and the mean radiation temperature.

Ceiling Heating Guide

1 2 3 4 5 6 7 8 9 10 11 12 13 14 15 16 17 18 19

Directed operative temperature (°C): a concept in Swedish building regulations used to describe the heat exchange for a small section of skin. Defined for a certain measurement point and direction in the room as the mean value of the air temperature and the plane radiation temperature.

Equivalent temperature (°C): a measurement to describe the combined effect of the air temperature, radiation temperature and air velocity on a person's heat balance. The relation is also affected by the person's activity and clothing.

Thermal comfort
The indoor climate conditions that provide thermal comfort differ from one person to another. Trials performed by Professor P O Fanger [21], where large groups of people were exposed to different climatic affects, show, however, that most people react to the indoor climate in a similar fashion. The trials have led to criteria for thermal comfort based on climatic conditions under which a majority of a large group of people experiences the climate as neutral.

Using some of the climatic factors mentioned above, it is possible to calculate the degree of thermal comfort by using a PMV index (Predicted Mean Vote). The value defines a statistically based prediction for how a large group of people would rate the degree of comfort for a certain climate at a given degree of activity and clothing. Based on the PMV index, you can calculate a PPD index (Predicted Percentage of Dissatisfied), which indicates what part of a larger group of people find a certain indoor climate unsatisfactory.

$$PMV = (0.303 \times e^{-0.0036M} + 0.028)\,[(M-W) - 3.05 \times 10^{3}$$
$$\{5733 - 6.99(M-W) - p_a\} - 0.42\{(M-W) - 58.15\} - 1.7 \times$$
$$10^{-5} \times M(5867-p_a) - 0.0014\,M\,(34 - t_a) - 3.96 \times$$
$$10^{-8} f_{cl}\{(t_{cl} + 273)^4 - (t_r + 273)^4\} - f_{cl}h_c(t_{cl} - t_a)$$

where:

$$t_{cl} = 35.7 - 0.028(M-W) - 0.155I_{cl}[3.96 \times$$
$$10\text{-}8\ f_{cl}\{(t_{cl} + 273)^4 - (tr + 273)^4\} - f_{cl}h_c(t_{cl} - t_a)]$$

$$h_c = \begin{cases} 2.38(t_{cl} - t_a)^{0.25} & \text{for } 2.38(t_{cl} - t_a)^{0.25} > 12.1(v_r)0.5 \\ 12.1(v_r)^{0.5} & \text{for } 2.38(t_{cl} - t_a)^{0.25} < 12.1(v_r)^{0.5} \end{cases}$$

$$f_{cl} = \begin{cases} 1.00 + 0.2I_{cl} & \text{for } I_{cl} < 0.5 \text{ clo} \\ 1.05 + 0.1I_{cl} & \text{for } I_{cl} > 0.5 \text{ clo} \end{cases}$$

Key:
M = Metabolism (W)
W = External labour (W)
I_{cl} = Amount of clothing (clo)
pa = Water vapour partial pressure (Pa)
f_{cl} = Clothing surface factor, i.e. the relation between naked skin and clothed skin
t_{cl} = Clothing surface temperature (°C)
h_c = Convective surface coefficient of heat transfer (W/m^2 °C)
t_r = Mean radiation temperature (°C)
t_a = Room air temperature (°C)
v_r = Relative air velocity (m/s) = v + 0.005(M-58)
v = Mean room air velocity

When the PMV index is known, the PPD index can be calculated:

$$PPD = 100 - 95 \times e\text{-}(0.03553PMV^4 + 0.02179PMV^2)$$

Calculating the PPD index manually in each given case is a very lengthy process with these formulas. It is significantly easier to use climate simulation software that gives the PPD index or other climatic indices as a result of a simulation of the conditions in a room. Lindab Comfort's own climate simulation programme TEKNOsim provides, among other things, the air temperature, operative temperature and PPD index.

According to Fanger's formula, a maximum of 95% of the people can be satisfied with a given indoor climate, i.e. at least 5 per cent will always experience a given indoor climate as uncomfortable (PPD=5% and PMV=0 indicate the best possible thermal comfort). In the Swedish Indoor Climate Institute's publication R1 [8], the defined classes for thermal indoor climate are based on the PPD index, which ranges from <10 % dissatisfied for the highest class to 20 % dissatisfied for the lowest class.

We reserve the right to make changes

Ceiling Heating Guide

Chapter II

This is how ceiling heating works

Lindab Comfort's ceiling heating products utilise thermal radiation as the primary way of transferring heat (approx. 60% of the total heating effect). In this chapter, we review the fundamentals of heat radiation.

Heat radiation
Thermal radiation is electromagnetic radiation with a wavelength of approx. 9 to 15 mm, at a surface temperature of 30 to 70° C. The hotter the surface is, the shorter the wavelength, and the colder the surface, the longer the wavelength. Thermal radiation at these temperatures is invisible to the naked eye. It is first when the surface temperature approaches 600 to 800° C that thermal radiation starts to be visible to the eye.

Thermal radiation is given off by all bodies that are warmer than absolute zero (-273,16° C). The absolute thermal radiation of a body is seldom of interest. On the other hand, the net exchange of radiation energy between two bodies or surfaces is of interest for performing calculations in technical contexts.

Heat transfer by radiation
Heat transfer (net exchange) by radiation depends on the temperature difference between the surfaces, their geometrical relationship and nature. The heat flow, Ps, between two surfaces is formulated with the following formula:

$$P_s = \sigma F_{12} A_1 (T_1^4 - T_2^4) \text{ (W)}$$

where

$$F_{12} = \frac{1}{\frac{1}{f_{12}} + \left(\frac{1}{\varepsilon_{12}} - 1\right) + \frac{A_1}{A_2}\left(\frac{1}{\varepsilon_2} - 1\right)}$$

Here f_{12} is a function of the geometrical relationship between surfaces A_1 and A_2 and is called the angle factor. The angle factor can be calculated or read off from diagrams in heat transfer handbooks. When thermal radiation is calculated, it is always the projected area of a surface that is used; i.e. the net exchange in thermal radiation from a folded or ribbed surface does not increase compared to that from a smooth surface.

s = 5.67×10^{-8} W/m²K4 (Stefan-Boltzman's constant)
e_1 = The heat radiating surface's emission factor
e_2 = The receiving surface's emission factor
A_1 = The heat radiating surface's projected area (m²)
A_2 = The receiving surface's projected area (m²)
T_1 = The heat radiating surface's temperature (K = Kelvin, which is T°C +273)
T_2 = The receiving surface's temperature (K)

It is important to remember that the radiation exchange between two surfaces (e.g. a ceiling heater and a floor) does not decrease with distance, so long the air that the radiation passes through is of normal cleanliness. This is due to the negligible absorption of thermal radiation by the air, see below. On the other hand, radiation intensity (output per surface unit), along with the transferred energy, diminishes if the distance increases or if the surface is slanted. This affects the angle factor, which is included in factor F_{12} and depends on the distance and angle between the surfaces and the size and temperature of the surfaces. A well-known example of the variation of the radiation intensity is the solar radiation intensity throughout the day and even throughout the year. Solar radiation towards the Earth varies, in part, with the distance to the Earth and, in part, with the angle to the Earth.

The surface with the lower temperature will be the recipient of the net exchange of thermal radiation. In ceiling heating, it is always the surrounding room surfaces that are the recipient of the thermal radiation. In other words, with radiant heating the surrounding surfaces that have a lower temperature than that of the radiation heater will absorb the heat radiation, thereby increasing their own temperature, normally several degrees above the temperature of the room air.

The air's significance
When thermal radiation passes through the air, virtually no radiation is absorbed. However, the two gases, carbon dioxide (CO_2) and water vapour (H_2O), absorb and emit heat radiation, whereas the so-called elementary gases (gas where the atoms are of one kind), e.g., O_2, N_2 and H_2, are transparent to thermal radiation. As the air is composed of different gases, where CO_2 (0.05 weight%) and H_2O (0.7 weight%) have very low concentrations and O_2 (21 vol%) and N2 (79 vol%) have high concentrations, the air can be considered to be completely transparent to thermal radiation at normal air thickness (< 20 m). However, an abnormally high concentration of particles in the air could exercise minor influence on the heat exchange between a ceiling heater and the surrounding surfaces.

Ceiling Heating Guide

Emission factor
The emission factor, e, indicates how much energy a surface radiates compared to a perfect radiant surface, a so-called black body. The emission factor is equal to 1 for a black body and between 0 and 1 for all other materials. The higher the emission factor, the better the surface works as a thermal radiator and heat recipient. The list below shows the emission factor of some materials perpendicular to their surface and at normal room temperature:

Aluminium, rolled bright:	0.04	
Copper, polished:	0.03	
Glass:	0.94	
Wood (beech):	0.94	
Brick, plaster:	0.93	
Concrete:	0.88	
White enamel:	0.95	(Lindab Comfort's heaters)
Matt black enamel:	0.97	

As seen from the table, all surfaces except for metal ones are good thermal radiators/recipients.

The values show that a white enamelled surface is nearly as good as a matt black enamelled one. This is one of the reasons why Lindab Comfort's ceiling heating panels are enamelled on the underside but not on the top. The top surface of the ceiling heater is normally of oxidised aluminium, which has a higher emission factor than rolled bright aluminium but much lower than a white enamelled surface. In this way, the radiant energy can be "guided" to the underside of the heater where it is needed the most. To guide further the thermal radiation downwards, the top is also insulated.

It is worth noting that glass has a relatively high emission factor and that it is at the same level as some of the most common construction and furnishing materials. As regards glass, low-temperature radiation cannot pass through it; any such radiation is either absorbed (approx. 88%) or reflected (approx. 12%). Solar radiation, however, with its significantly higher temperature and shorter wavelength, passes through. This is the reason why the expression "greenhouse effect" is used for greenhouses and other buildings with large glass surfaces.

Thermal comfort with heat radiation
In relation to their surroundings, people are warm bodies and therefore radiate some surplus heat to their surroundings. When the surrounding surfaces have a higher temperature than normal, which is the case with radiant heating, there is less radiation from the body. In a room with radiant heating, a person will therefore experience the surroundings as warmer, as his or her radiation to the surrounding surfaces will be lower than with conventional heating at the same air temperature.

As a result of this, when you have radiant heating, you can lower the air temperature and nevertheless maintain the same operative temperature. Under normal circumstances, you can lower the air temperature by 1 to 2°C [4] and still achieve the necessary operative temperature.

The thermal radiation in a room is either absorbed or reflected. When radiated heat is absorbed, the surface temperature increases. With normal furnishing and construction materials, the reflected portion of the radiation is only 5 to 10%, which means that most of the thermal radiation is absorbed. This is the primary reason why the surface temperature of the underside of a table [1] is a few degrees above the air temperature. All surfaces, including all furnishings and furniture, absorb thermal radiation and become warmer than the ambient air temperature. This means that both the air temperature and the operative temperature will be balanced, even in parts of the room that are not directly "seen" by the ceiling heater.

In [1], the difference between the air temperature under and next to a table is given as 0 to 0.9° C depending on the measuring case. It is worth noting that the surface temperature on the underside of the table was 0.7 to 3.2° C higher than the air temperature. This shows that the table is heated by the thermal radiation from the ceiling. In [2], the difference in air temperature under and next to a school desk is shown to be as a maximum 0.3° C. The difference in radiation temperature here is given to be a maximum of 1.6° C. According to our own measurements, conducted in different environments, such as day-care centres, offices, schools and industries, the difference in operative temperature under and next to a table, respectively, is within the range of 0.2 to 0.4° C.

Draughts
There are a number of factors that influence if, and how strongly, you will experience draughts from a window. The most important ones include the U value of the window, the design of the window bay, the ventilation principle, the placement and properties of the air unit, the heating system, the person's clothing and activity, the geometry and furniture of the room, infiltration and outdoor temperature [5] [6] [7]. In other words, it is not only a question of whether the heater is under the window or on the ceiling.

We reserve the right to make changes

Ceiling Heating Guide

A supply air unit with rear-edge air supply with too long a throw and low supply air temperature can also be a reason for draught formation. With radiators under the windows, furnishing can be a critical factor, for example, if a table is placed close to the window. The rising hot air is then shielded from the radiator under the table, and the draught "flows" over the table and then down towards the floor [7].

[1], [2] and [3] show increased surface temperatures on the inside of the window as the glass surface absorbs heat radiation. A joint result for all three is that the radiant heat is distributed differently across the window surface. The window has a higher surface temperature in its upper part and a somewhat lower one in its lower part. An increase of approx. 2 to 10° is registered depending on the measuring point and the case. It is important to point out that double-glazed windows were used in all cases. In modern houses with triple glazing, the temperature increase will be even higher. Our own measurements of window surface temperatures heated by ceiling heaters indicate that, at an outdoor temperature of between 0° C and -5° C, double-glazed and triple-glazed windows have a surface temperature of 12 to 17° C and 17 to 20° C, respectively.

In [2], it was noted that a room with windowsills has a favourable effect on the draught from the window. This happens because the windowsill is both heated by ceiling heater and deflects the downward air stream, thereby admixing warmer room air.

Calculation example

The formula for radiant heat transfer says that the temperature difference between two surfaces plays a relatively important role, especially if the temperature is expressed in Kelvin and raised to the power of four. The formula also says that more thermal radiation automatically goes to colder surfaces than to warmer ones, and it is this condition that is perfect for a heating system.

The diagram here shows how the thermal radiation spreads across a wall surface (outer wall). The calculation of the heat exchange between the ceiling heaters and the wall has been made for each decimetre of the wall, according to the formulas in Chapter II and the formulas for the angle factor. Two ceiling heaters are mounted on the ceiling parallel to the wall, at 1.7 m and 5.25 m from the wall, respectively. These dimensions are taken from the diagrams in Chapter V that describe the placement of the ceiling heaters. The assumed conditions apply during a cold winter day.

It is interesting to note that the thermal radiation of the two panels reaches its maximum on different parts of the wall. This is caused by the geometrical relationship, i.e. the angle factor is different for the two heating panels in relation to the wall.

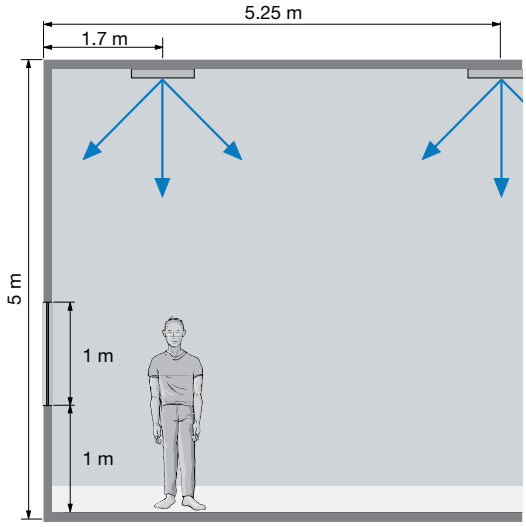

Room assumed in the calculation example.

It is also clear that the window receives a large share of the thermal radiation compared to the wall next to the window. The reason for this, as indicated above, is that the window surface is colder and thereby "sucks" more radiant heat. As a result, the window surface will be heated considerably more than if the room's heat source was completely convective, e.g. a fan heater. If the window surface is heated to approx. +15°C, the risk of draughts from the window is reduced significantly.

To sum up, we can establish that the following applies to ceiling heating applications in buildings and rooms:

- The emission factor for indoor surfaces is relatively equal, approx. 0.88 to 0.95.
- The ceiling height has no importance for the transfer of radiant heat from ceiling heaters to other surfaces.
- The transfer of radiant heat automatically increases if the recipient surface has a lower surface temperature.
- The air temperature can normally be reduced by 1 to 2° C, while maintaining the operative temperature, thanks to the fact that the surrounding surfaces are heated by the ceiling heating system.
- With ceiling heating, there will be small differences in the air temperature and operative temperature under and next to a table, respectively.
- Radiant heat from the ceiling panel heats the inside of a window, thereby minimising the risk of draughts.

Ceiling Heating Guide

1
2
3
4
5
6
7
8
9
10
11
12
13
14
15
16
17
18
19

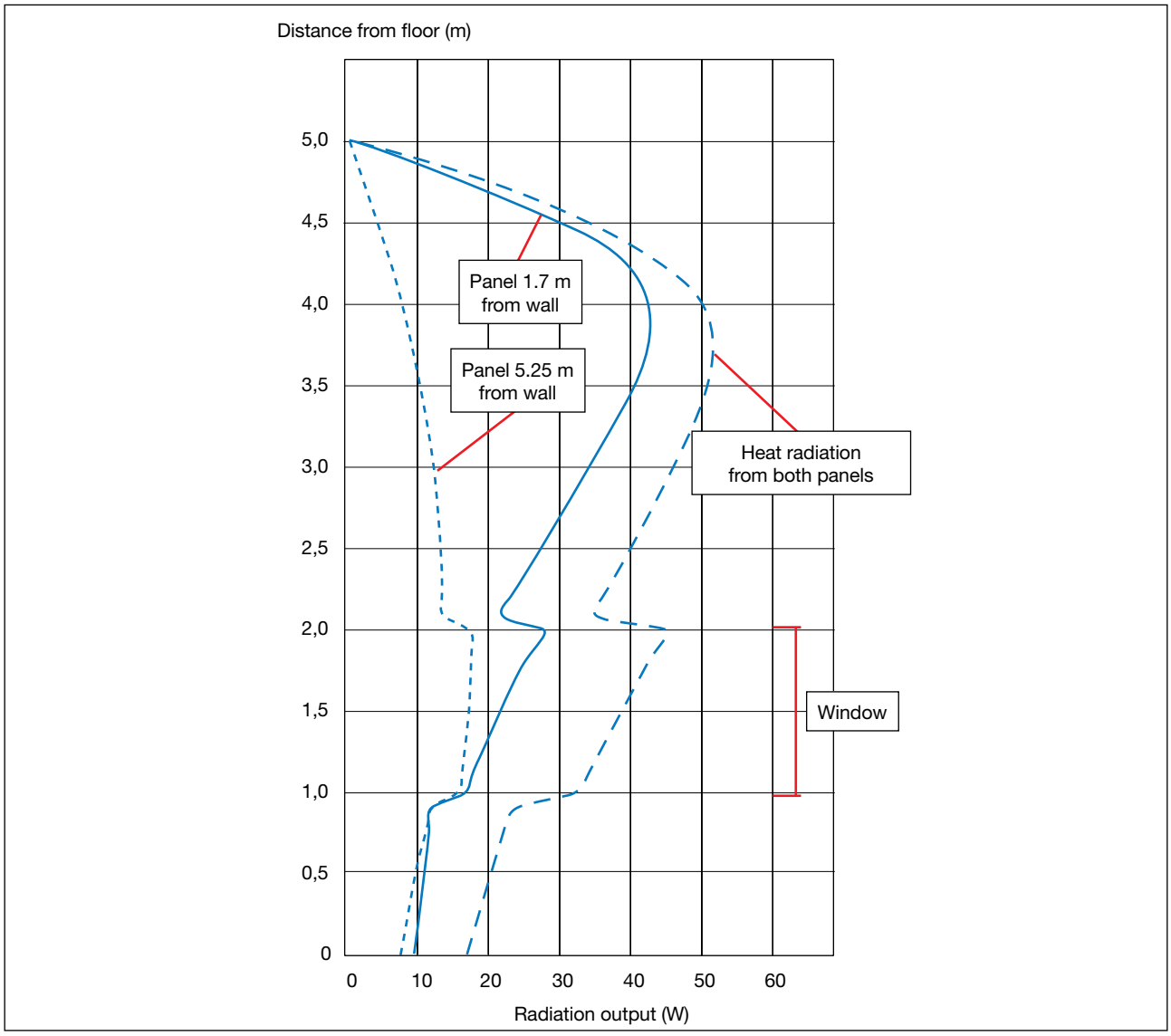

The diagram shows how the transferred heat output from two panels is distributed on a façade wall with a window.

The following input data is assumed:

Wall:	- height: 5 m
	- width: 10 m
	- emission factor: 0,9
	- surface temperature: 22° C
Window:	- breast height: 1 m
	- window height: 1 m
	- width: 10 m
	- emission factor: 0,94
	- surface temperature: 15° C
Ceiling heater:	- width: 1 m
	- length: 10 m
	- emission factor: 0,95
	- surface temperature: 40° C
	- installation height: 5 m

We reserve the right to make changes

Ceiling Heating Guide

Chapter III

Where does a ceiling heater work well?

Ceiling heating has a very wide range of application, wider than most other forms of heating. It can be said generally that ceiling heating can be used to nearly all types of premises. Ceiling heating is primarily used in different premises, such as sports centres, workshops, industrial halls, warehouses and shopping centres. However, ceiling heating also works very well in premises such as daycare centres, nursing homes, residential homes, schools and laboratories.

The output of a ceiling heater is divided into approx. 40% convection and approx. 60% radiation. The convective heat is transferred to the air next to the ceiling, and contributes to covering the transmission losses through the ceiling. The share of heat transferred through radiation mainly goes to the floors and walls.

Buildings normally have the same distribution of heat losses through the walls, ceiling and floor, i.e. approx. 40% of the heat is lost through the ceiling and the other 60% through the rest of the building. This is why ceiling heating, together with all of its other advantages, is ideal for heating nearly all types of buildings. Below we present a transmission calculation for a building, and the result shows that the distribution of transmission losses is of the magnitude described above.

Input data:

DOT_{10}:		20° C
Annual mean temp.:		6° C
U value	Ceiling:	0.2 W/m², °C
	Wall:	0.2 W/m², °C
	Floor, inner:	0.3 W/m², °C
	Window:	2.0 W/m², °C
Area	Ceiling:	800 m²
	Walls:	600 m²
	Floor, in:	680 m²
	Floor, out:	120 m²
	Window:	30 m²
Temperature gradient:		0.7° C/m
Ceiling height (mean):		5.0 m
Length:		40 m
Width:		20 m
% Window area:		5% of wall area
Indoor temp. Occupied zone:		18° C
	Mean:	20° C
	Ceiling:	22° C

Output data:

Effect requirement:	Ceiling:	6,640 W	38%
(Transmission)	Walls:	4,770 W	28%
	Floor, in:	2,448 W	14%
	Floor, out:	2,448 W	7%
	Windows:	2,280 W	13%
	Total:	17,278 W	100%

Ceiling Heating Guide

1
2
3
4
5
6
7
8
9
10
11
12
13
14
15
16
17
18
19

Chapter IV

Design requirements for a ceiling heater

The design and technical solutions for a ceiling heater are different from one manufacturer to another. The requirements for a well-functioning ceiling heater, however, are the same and are largely based on the physical laws that govern heat transfer.

Basic requirements for a ceiling heater
One of the most important requirements that should be placed on a ceiling heater is that there is an equal temperature across its surface. This gives maximum output per unit area. If the water temperature in a heating system, for example, is 55 to 45° C or 60 to 40° C, i.e. the mean water temperature is 50° C (55+45)/2, then the desired temperature across the entire surface of the product should also be 50° C. However, this is a practical and even theoretical impossibility (it would require infinite heat conductivity) as there will be heat losses on the way from the water in the pipe to the surface of the product. The goal is therefore to reduce these heat losses as much as possible. Below, we will review how this goal can be optimised and how other requirements can be met.

What should a well-designed ceiling heater look like?
There are several ways to assess the quality, operation and service life of a ceiling heater. These are:
1. Choice of material
2. How efficient is the bonding/contact between the pipe and fin
3. Optimization of the ceiling heater; heat effect/cost
4. How well is the product tested?
5. How easy is to mount the product?
6. Flexibility
7. Finish
8. Product structure

The fundamental principle of all water-borne ceiling heating products is identical. It is based on a water-carrying pipe and a radiant surface (fin). The pipe should then be connected to the fin in such a way that the heat from the water is led through the pipe wall to the fin (see Picture 1). The temperature of the fin increases, and the product starts radiating thermal radiation. To achieve the intended effect in the room, the ceiling heater is insulated on top to prevent unnecessary thermal radiation from reaching the ceiling surface.

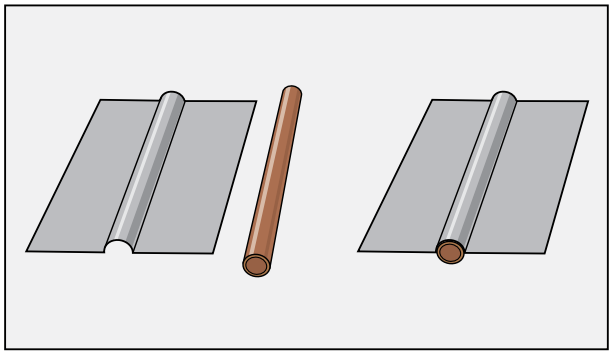

Picture 1. Basic elements in a ceiling heater.

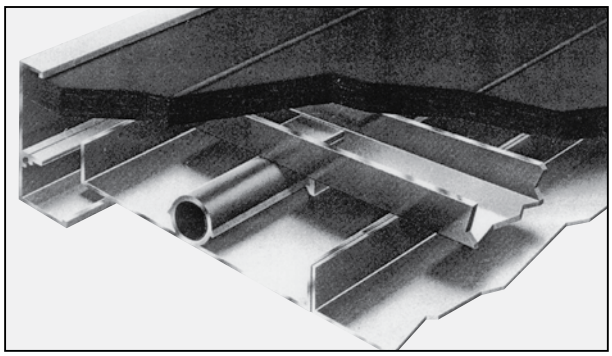

Picture 2. The pipe expanded in an aluminium profile.

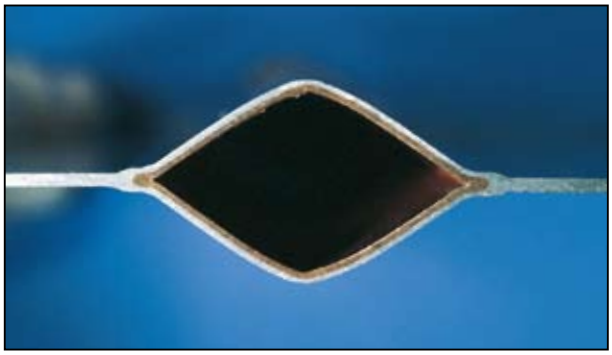

Picture 3. Cross-section of Lindab Comfort's basic element. The copper pipe and the aluminium fin are metallurgically bonded with Lindab Comfort's world patented method.

1. Choice of material

The choice of material is of decisive importance for the heating effect and the service life of the product. Nowadays, in Scandinavia only aluminium is used as the fin material. This is because aluminium conducts heat very efficiently and the product weight is low. The pipe material is either steel or copper. There are several advantages to using a copper pipe:

- The risk of corrosion is significantly lower compared to a steel pipe
- The product weight is lower and material expansion (see next page) is more even.
- Installation is also much easier if a copper pipe is used.

We reserve the right to make changes

Ceiling Heating Guide

2. Connection between pipe and fin

When the materials have been selected, the pipe and the fin must be joined together, so as to ensure that the contact/connection between them is as good as possible. The quality of the connection between the pipe and the fin influences to a very high degree how well a thermal radiator will work. Nowadays, three methods are used to make this connection.

1. Different methods of screwing, welding, clamping or snapping both surfaces together (see picture 1 on the previous page).
2. A pipe, usually of copper, is inserted into an aluminium profile shaped as a pipe and fin in a single unit. The pipe is then expanded into the profile so as to achieve a good contact between the different materials. See Picture 2 on the previous page.
3. A copper pipe and an aluminium fin are rolled together under very high pressure (approx. 50 tonnes) to form a single unit. The copper pipe is then blown up to normal size, thereby taking on a rhomboid shape (see picture 3 on the previous page).

Thus, the connection between the pipe and the fin in the first two methods is purely mechanical. It is not hard to imagine that a connection that is made mechanically does not provide the optimum heat transfer. A number of experiments with such solutions [14] prove that there are significant effect losses – in particular, after a long period of use. The last method provides metallurgy bonding (the materials are partially mixed through molecular bonding).

If the quality of these methods is to be determined, it could be said that the latter two are good solutions if they are done correctly. The first solution is a significantly inferior design for several reasons. Above all, this has to do with the fact that different materials expand differently when exposed to heat. The difference in expansion between steel and aluminium is much greater than the difference in expansion between copper and aluminium. What happens is that the aluminium plate "rises" from the steel plate, thereby impairing the contact between the pipe and the fin, or in other words, reducing the heating effect of the product. Moreover, these types of designs are sensitive to the way the product is handled during production, delivery and installation.

The contact between the pipe and the fin can also decrease if the product is handled negligently.

Metallurgical bonding (design no. 3) gives the most advantages. The material expansion is uniform all the way, the risk of corrosion is minimised and it is not possible to impair the contact between the pipe and fin, due to handling in connection with production, transportation or installation.

Expansion coefficients for different materials:

Aluminium	24
Copper	16
Steel	12

This shows that it is an unqualified technological error to connect the different metals mechanically, as this results in effect losses for the product - this is under the condition that the point-by-point contact between the pipe and the fin is not infinite when counting the number of contact points. If the point-by-point connection is made with too much spacing, the aluminium plate (the radiant surface) will rise from the steel or copper pipe, which in turn causes effect losses. A mechanical connection of a steel pipe and an aluminium plate gives the worst thermal contact.

Example:
Conditions: A steel pipe is joined mechanically (point by point) with an aluminium fin.

WS:	80/60° C
Room:	20° C

Result: The aluminium plate will rise 0.6 mm from the steel pipe, i.e. the contact will be achieved only at certain points, and these will be the only places where efficient heat transfer will take place.

Galvanic corrosion
This problem becomes more relevant for cooling, when using a chilled ceiling, where there is a risk of condensation during specific times of the year. However, it can also be relevant for heating, if there is a high humidity level in the room or if products are rinsed, especially when these are not exposed to the effects of heating. To find out what the risk is in these cases, refer to the table on the next page.

Ceiling Heating Guide

1
2
3
4
5
6
7
8
9
10
11
12
13
14
15
16
17
18
19

	Standard potential series relative to standard hydrogen electrode	Galvanic series in 3% NaCl relative to standard hydrogen electrode	
	Me/Me^{n+}	Me/Me_xZ_y, pH7	
Pt/Pt^{2+}	+1.20V	+0.57/Pt/PtO)	Pt +0.47V
Ag/Ag^{+}	+0.80V	+0.22(Ag/AgC1)	Ti +0.37V
Cu/Cu^{2+}	+0.34V	+0.05(Cu/Cu2O)	Ag +0.30V
H_2/H^{+}	±0.00V	-0.414(H_2/H_2O)	Cu +0.04V
Pb/Pb^{2+}	-0.13V	-0.27($Pb/PbCl_2$)	Ni -0.03V
Ni/Ni^{2+}	-0.25V	-0.30(Ni/NiO)	Pb -0.27V
Fe/Fe^{2+}	-0.44V	-0.46(Fe/FeO)	Fe -0.40V
Zn/Zn^{2+}	-0.76V	-0.83(Zn/ZnO)	Al -0.53V
Ti/Ti^{2+}	-1.63V	-0.50/Ti_2O_3/TiO_2)	Zn -0.76V
Al/Al^{3+}	-1.67V	-1.90(Al/Al_2O_3)	

Standard potential series (electrochemical voltage series) and galvanic series for some common metals.

Galvanic corrosion occurs because of the interconnection of two metals with different electrode potential, among other causes. What happens is that aluminium hydroxide (looks a bit like flour) deposits on the aluminium next to the pipe. This coating effectively prevents the heat from the pipe from reaching the fin (the radiant surface) which, in turn, causes output loss for the ceiling heater. A condition for this process is that moisture successfully penetrates between the different materials.

It is evident from the table that you should definitely avoid mechanical connections between copper and aluminium, but also between steel and aluminium.

In certain types of premises, where a high percentage of moisture can be expected during certain periods, or where the products have to be rinsed for hygiene reasons, you should avoid using products with a mechanical connection (design 1). If moisture does penetrate between the copper/steel pipe and the aluminium fin, there is a risk of galvanic corrosion.

3. Optimizing the ceiling heater

How good the heat transfer is between the pipe and fin and how well the fin can conduct the heat can best be described with the concept of fin efficiency. Fin efficiency is a measure that describes the heat transfer losses in a fin due to unevenness in the output distribution across the surface of the fin.

It is theoretically possible to calculate the fin efficiency. Once you have the fin efficiency, you can optimise the fin thickness, the c/c distance between the pipe rows, the component materials and pipe diameters.
Note! The diagram applies with perfect (homogenous) contact between pipe and fin.

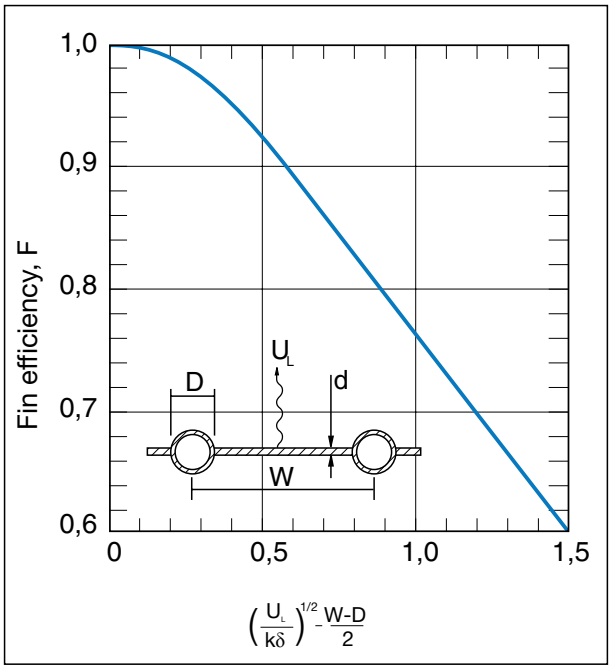

Fin efficiency for pipe and fin in homogenous contact.

Key:
D: Pipe diameter, outer.
d : Fin thickness
w: c/c distance between pipe rows
U_L: Total heat load per surface unit W/m² °C – is approx. 11 with suspended installation
k: Thermal conductivity (coefficient of thermal conductivity)

The formula shows that increased fin efficiency can be achieved by:
1. Using materials with high thermal conductivity.
2. Thicker fin.
3. Increasing the pipe diameter (the concept of fin efficiency, however, does not take into consideration the fact that an increase in pipe diameter lowers the Reynolds number and increases the risk of switching to laminar flow, which would significantly impair the heat transfer between the water and the pipe wall).
4. Reducing the c/c distance between the pipe rows.

We reserve the right to make changes

Ceiling Heating Guide

Thermal conductivity
To fulfil point 1 in the previous paragraph, you need to know the thermal conductivity of the relevant metals.

Material	Thermal conductivity (W/m K)
Aluminium	218
Copper	385
Steel	84
Silver	420
Gold	300
Tin	65
Nickel	88

Certain of these metals can be eliminated directly for cost reasons. The metals may be relevant for the fin as previously mentioned are – aluminium, copper or steel. The reason for selecting aluminium is obvious from the table below.

Material/Property	Weight	Strength
Aluminium	1 kg*	1 N/m²
Copper	2 kg	0.6 N/m²
Steel	4 kg*	6 N/m²

**) Index = 1 for Al. The table applies for achieving the same fin efficiency, i.e. with compensated fin thickness.*

An additional reason for using aluminium is that it has very good resistance to external corrosion.

A few examples:
How is the thickness of the fin affected if you use copper or steel, respectively, instead of steel and if the fin efficiency is to remain constant?

Copper: The fin thickness can generally be halved to achieve the same degree of efficiency.
Steel: The fin thickness needs to increase by a factor of 2.5.

Pipe spacing
Pipe spacing is of importance for the heating effect attained by the product. The denser the pipe spacing is, the more even the surface temperature, and thereby, the higher the effect, or if you prefer that, the smaller the heating surface you need to install in the room. In other words, the optimum solution for heat production would be to install only hot pipes on the ceiling. For cost reasons, material + installation, this is not feasible. You should calculate instead what the optimum pipe spacing would be without the loss of too much heating effect.

4. How well is the product tested?

In those cases where the product has been tested by an independent test institute, clear proof has been shown of the product's quality and service life. Lindab Comfort's ceiling heaters have been subjected to many extreme tests. Here is a selection of these:

1. The products have been exposed outdoors for a period of ten years (in the capacity of solar collectors) to establish any corrosion risks.
2. Expansion tests. On repeated occasions, the surfaces have been exposed to a temperature of 200° C, and then shocked with 10° C water, to see if the expansion difference between the copper pipe and the aluminium fin affects the product.
3. Pressure tests. The products have been pressure-tested over 5,000 cycles at a pressure of 10 to 12 bar to ascertain material fatigue and discover any crack formation in the construction.

The last two tests were conducted at the Technical Research Institute of Sweden. In none of the cases has any quality impairment of the product been discovered.

5. Easy to install

If you can manufacture a product with a low weight that, at the same, has a stable design, you will have lower total costs (product price + installation costs) than what would otherwise be the case. Material selection, once again, is decisive for a good result. However, the construction and composition of the product will also be of importance. A low weight also provides an advantage in the form of a lower load on the ceiling structure.

6. Flexibility

Flexibility means how well the product can be adapted to new divisions in the existing premises. Flexibility has a great significance for the property owner, who will rent the building to several tenants during its service life, or if there should be changes to the layout of the premises. The climate system should not place restrictions on the type of activity for which the premises are intended. If the premises have been used as a warehouse, the climate system should not be an obstacle to modifying the premises to make them suitable for a manufacturing industry where, for example, machinery will have to be anchored to the floor. It should be easy to move and relocate the products across the ceiling to the place where they are needed the most. A prerequisite for this is prefabricated units that are easy to connect and interconnect.

Ceiling Heating Guide

7. Product finish

As regards finish, it is the surface treatment that is of decisive importance. Automated production with well-implemented preparatory work and a stove-enamelled surface provides a high-quality finish.

8. Product structure

To obtain the intended effect from the ceiling heater, the surface should be smooth, to prevent unnecessary air movement (convection). The share of radiation should be as high as possible to attain the intended effect - both with regard to comfort and operating costs. Insulation of the top surface should be good enough to concentrate the heating effect to the underside of the ceiling heater.

Products entirely of aluminium
These types of products, where both the pipe and fin are of aluminium, occur rarely. This is due to the obvious risk of corrosion that exists when water is led through an aluminium pipe.

This type of corrosion is called pitting and always occurs, and very quickly, when water is led through an aluminium pipe – the risk of leakage is expected to appear within a matter of days. To counteract this type of corrosion, so-called inhibitors are added to the water, i.e. different types of chemicals that slow down the corrosion process. The problem with inhibitors is that they are used up continuously and therefore must be added continuously to eliminate the risk of corrosion. If the inhibitor concentration drops too low, the inhibitor can do more damage than good - it can accelerate the corrosion process.

We reserve the right to make changes

Ceiling Heating Guide

Chapter V

Placement of the ceiling heater

The fundamental rule when positioning ceiling heaters in a room or a building is that ceiling panels should be distributed as evenly as possible. Moreover, the panels should be placed in relation to the heat losses of the surrounding surfaces, i.e. more heat-emitting surface should be positioned near façade and window surfaces, partly, to cover the heat losses and, in part, to heat the window surfaces, thereby counteracting possible draughts.

When selecting a ventilation system or positioning air units, you do not need to take the ceiling heating system into consideration. Ceiling heating itself does not cause any air movement. References [10] and [11] have investigated air movements in rooms with ceiling heating. In summary, the results show that only minor air movement is detected in these rooms. It is only near a cold outer wall that air velocities in excess of 0.03 m/s can be recorded. The air velocities that normally occur in a room, 0.1 to 0.2 m/s, are caused by ventilation and convective air movements due to people and hot equipment.

Instructions are given here for the theoretical ideal placement of the heating panels. However, in reality there are often obstacles preventing the ideal placement of the heating panels. There may be ceiling beams or other structures on the ceiling, light fittings or other installations that are in the way. Besides, you can decide to slash piping costs by simplifying the distribution of the heating panels, and thus not achieve the ideal placement.

It is important to point out that the instructions give recommended values. However, if it is not possible for practical reasons to reach the recommended values and the deviation from these is significant, you should contact us to ensure that there will not be any problems.

If the deviation is smaller, the results will probably be satisfactory in most cases. People are not so sensitive that they experience discomfort with the small differences in thermal radiation that would occur if the recommended distribution cannot be achieved.

You should nevertheless strive to follow the following rules of thumb so as to achieve as uniform distribution of thermal radiation as possible.

Against outer walls without windows, the panel closest to the wall should be placed, as follows:

With the indicated distance from the outer wall and different ceiling heights, the thermal radiation distribution is approx. 60 to 70% to the outer wall and approx. 30 to 40% to the floor, which corresponds to the approximate transmission loss distribution along an outer wall and the inner and outer edge zone of the floor, which are covered by a ceiling heating panel/heating strips. Strips or panels do not normally need to be angled to direct thermal radiation, for example, towards the outer wall. Normal spacing between ceiling heaters is assumed, according to what is given below.

Against an outer wall with windows: If the outer wall contains standard or large glass surfaces, the panels can be positioned closer to the wall.

The heating effect should be concentrated so as to lower the risk of draughts and to reach the required operative temperature values. Concentration is rarely needed with smaller windows. It is difficult to give rules of thumb in these cases, as there are significant variations in window size and building designs.

Spacing between panels/strip is evident from the diagrams below. The recommended spacing between panels/strips is presented as a function of the installation height. With the recommended spacing, the amount of thermal radiation is the same both between the heaters and beneath them, i.e. thermal radiation is distributed as uniformly as possible.

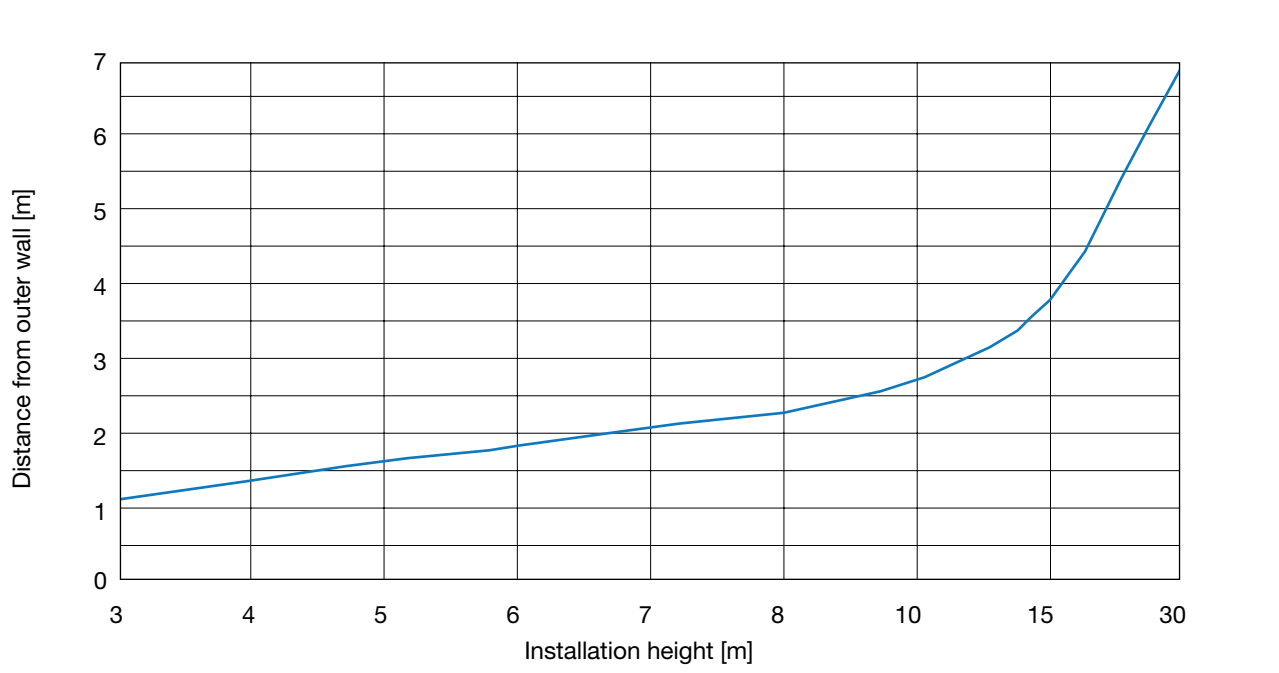

Recommended distance between the ceiling heater, closest to the outer wall, and the outer wall (without window).

Ceiling Heating Guide

1
2
3
4
5
6
7
8
9
10
11
12
13
14
15
16
17
18
19

Chapter V

Placement of the ceiling heater

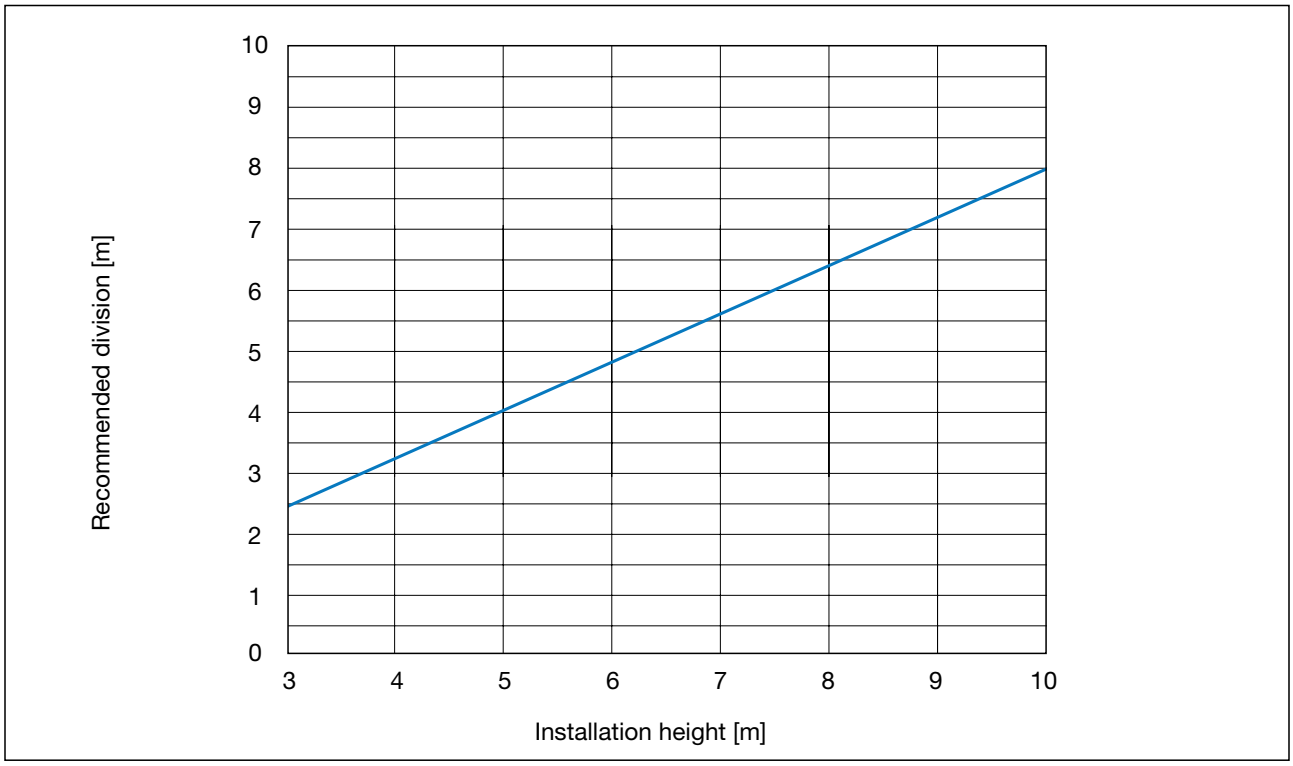

Recommended distance between panels with ceiling heating.

We reserve the right to make changes

Ceiling Heating Guide

Chapter VI

Temperature and necessary installation height

The temperature of the ceiling heaters, i.e. the temperature in the heating system, affects the effect, a subject we take up in Chapter VII. However, it also affects the experience of heat from the ceiling heaters. The question "Will my head be too hot?" is common. In this chapter, we review the factors for how the ceiling heater's temperature and installation height affect the experience of the climate.

It is the building's installations and heat source, the quantity and size of the ceiling panels, ceiling height, radiant temperature asymmetry and operative temperature that are affected or affect the temperature level. In this context, it is important to point out that the heating system does not require a higher temperature level, the greater the height of the ceiling. The reason for this was presented in Chapter II.

A selected temperature is most often used as basis and then, you determine, just as with conventional heating systems, the quantity and size of the ceiling heating panels needed to meet the design heating effect requirement (refer to Chapter VII). Certainly, the quantity and size should be combined so as to distribute the ceiling heating panels across the area of the premises (refer to Chapter V). Besides, you should also check the radiant temperature asymmetry and the directed operative temperature to see if these values are prescribed.

When the ceiling panels are distributed based on the heating effect requirement, the geometry of the premises and with regard to furnishings and other installations, you should check the radiant temperature asymmetry (RTA). RTA is defined as the difference in plane radiant temperature on each side of a small flat surface (also refer to Chapter I). The plane radiation temperature is calculated using the measured surface temperatures and angle factors or is measured with a radiation temperature meter. RTA is measured in a plane of 0.6 m above floor level when sitting or 1.1 m above floor level when standing. The Swedish Indoor Climate Institute [8] and ISO standard 7730 indicate that the RTA should be a maximum of 5° C with ceiling heating.

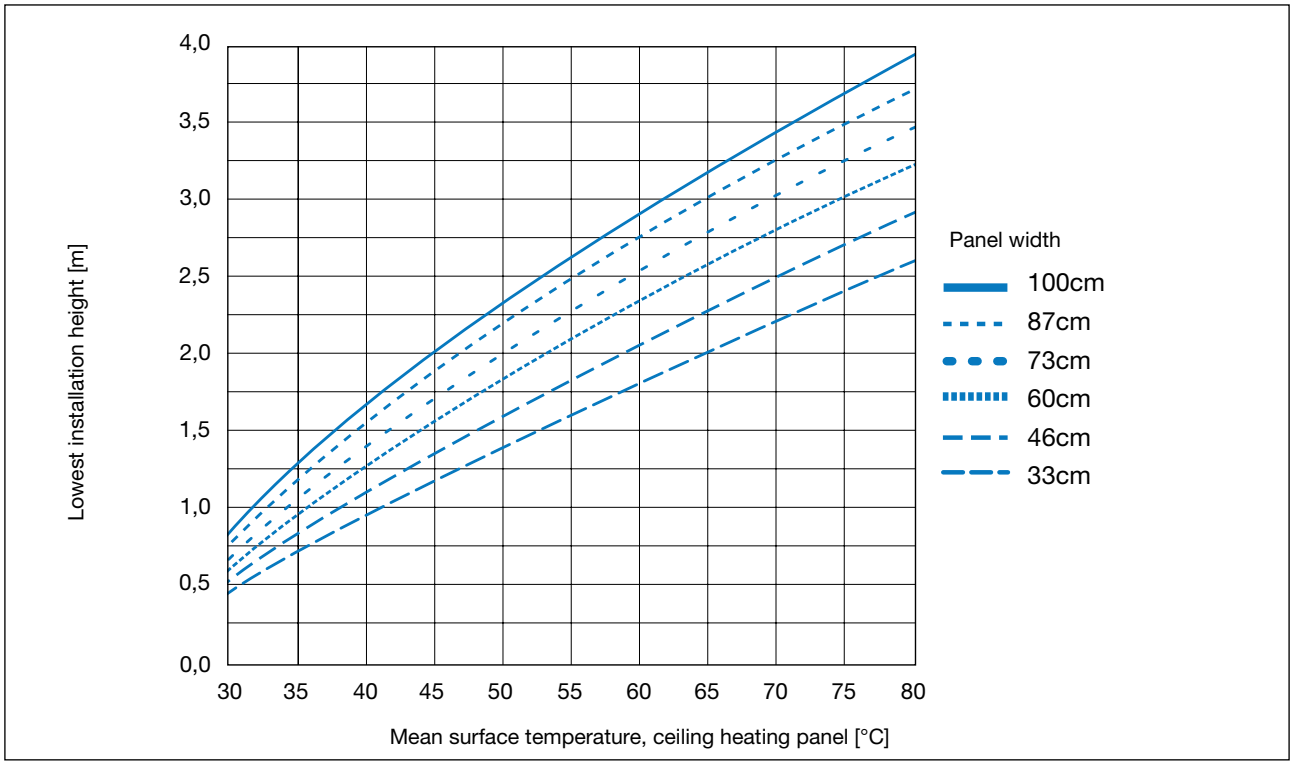

Lowest installation height for ceiling heaters with radiant temperature asymmetry of 5° C. Ceiling heater length 3.6 m.

Ceiling Heating Guide

The RTA is normally calculated directly below a ceiling heater and depends on the installation height, surface temperature and size of the ceiling heater and on the temperatures of other surrounding surfaces. To avoid extensive calculations, we present the diagram below, which indicates the lowest allowed installation height so that RTA does not exceed 5° C. The different curves represent different ceiling panel widths. The different diagrams apply for different ceiling panel lengths (3.6 m and 10 m). The presentation of these curves presupposes that all surrounding surfaces have the same temperature.

This is rarely the case in reality. In most cases, the RTA will be more favourable. Normally, there are one or more cold windows, and the floor is usually warmer than the surrounding walls with ceiling heating. This means that the RTA falls as the window(s) are most often above the measurement plane and thereby compensate for the warm ceiling panels. The warm floor also contributes to raising the plane radiant temperature under the measurement plane, which reduces the RTA. In total, the RTA will be less than 5° C if the ceiling heaters are installed at a height indicated in the diagrams.

In this connection, it is important to point out that, we are talking about here about design heating temperatures that statistically occur only a few days per year. During most of the year, the RTA with ceiling heating is less than 5° C.

In summary, we can ascertain that the smaller the surface (shorter and/or narrower) of the panels, the lower they can be installed without exceeding the stated radiant temperature asymmetry.

In [1], skin temperature measurements were taken, and the experienced comfort level of 15 test subjects was recorded in a room with ceiling heating. In summary, we can establish that there was no significant difference in skin temperature for the head and the rest of the body than normal. As regards the comfort experience, there were small differences in the comfort results between the head and feet. The difference, however, is not greater than what would be caused by other heating systems.

During our own measurements of radiant temperature asymmetry, the values were between 1.0 and 5.5° C in different premises, e.g. schools, day-care centres, showrooms, offices and industrial premises. Most values were around 2 to 3° C. The higher value (5.5° C) was measured in a workshop where the door was opened frequently which, in turn, lowered the floor temperature.

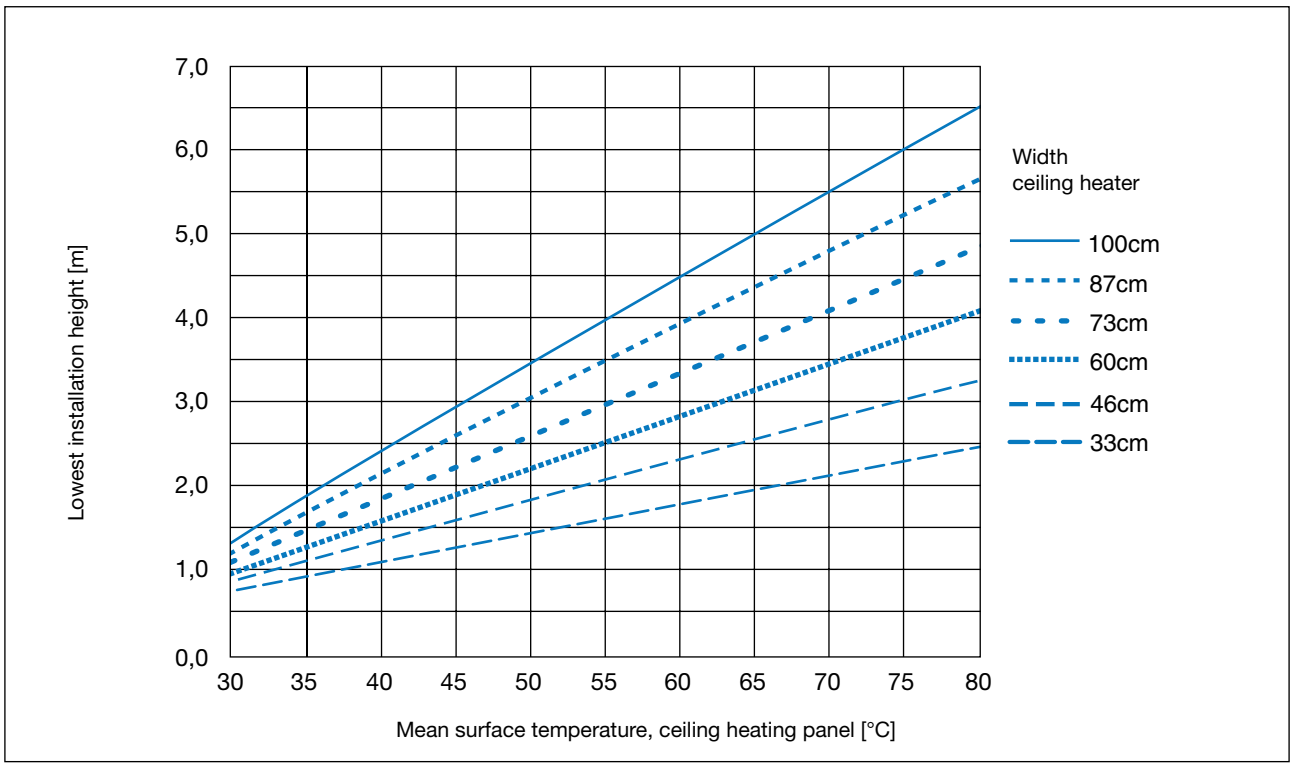

Lowest installation height for ceiling heaters with radiant temperature asymmetry of 5° C. Ceiling heater length >10 m.

We reserve the right to make changes

Ceiling Heating Guide

Zone heating
Ceiling heating offers a special advantage when heating a certain part or a certain zone in a building. You can maintain a low air temperature in the premises, but raise the operative temperature locally in those areas where people work/stay. The higher temperature of the ceiling heater and the heating of the floor allow the operative temperature to be raised well above the air temperature.

In the diagrams below, the operative temperature is presented as a function of the installation height. These show cases of air temperatures of 10 or 15° C, respectively. Walls and ceilings are assumed to have the same temperature as the air, whereas the floor is heated to a temperature of approx. 2° C above the air temperature. The different curves represent ceiling heater widths of 0.6 m and 1.2 m, respectively, with two different system temperatures, 55/45 and 80/60° C, respectively.

Operative temperature with zone heating

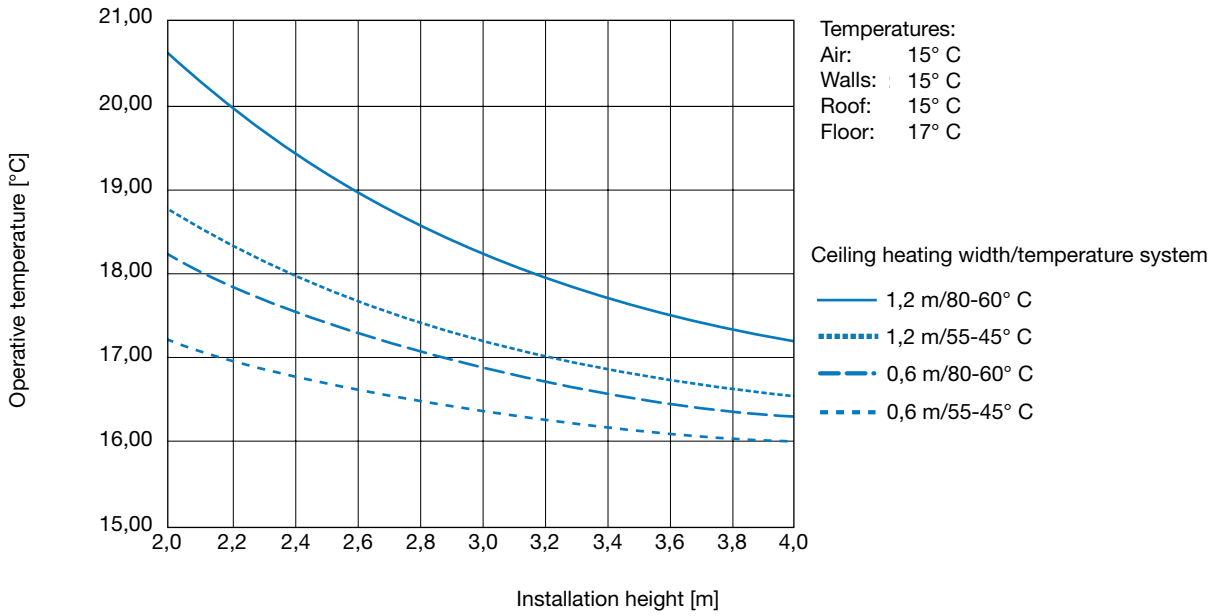

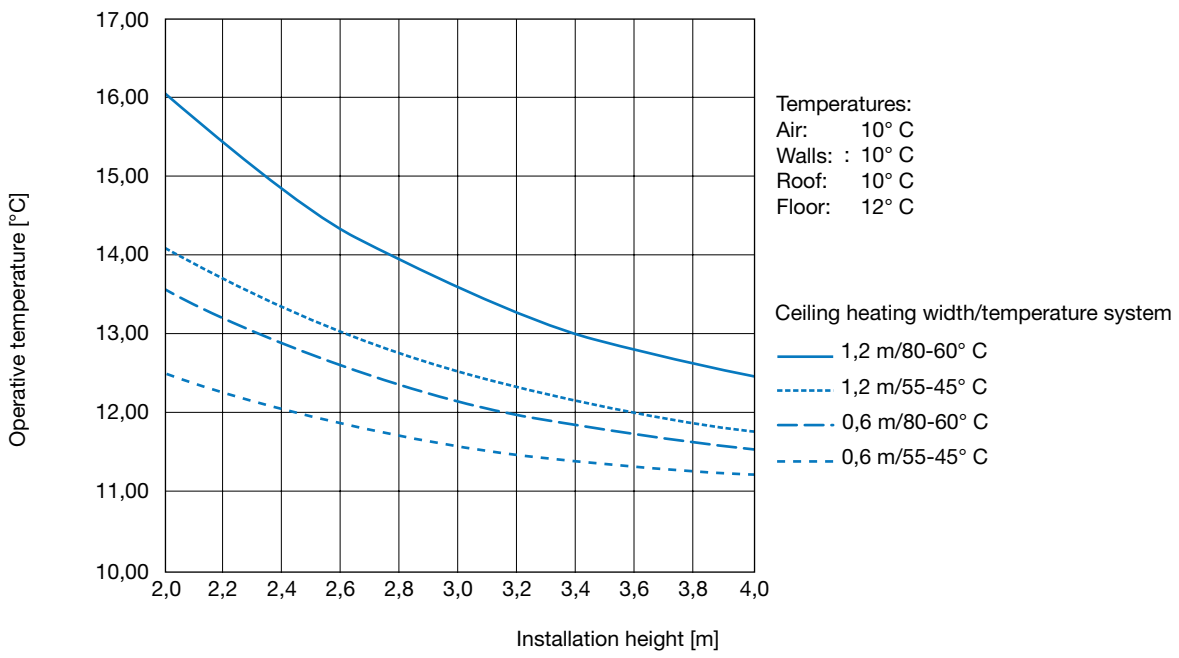

Ceiling Heating Guide

1
2
3
4
5
6
7
8
9
10
11
12
13
14
15
16
17
18
19

Chapter VII

Effect and energy

As previously mentioned, when calculating the design heating effect requirement, the different parts of the building are calculated first with regard to area and total heat transfer coefficient, U_p value, and then U_{mean}. This is normally calculated according to the existing building regulations BBR 94, Heat Insulation (Boverket) and Swedish Standard (SS 02 42 02 and SS 02 42 30).

When the design outdoor temperature (DOT) is to be determined, the method described in Swedish Standard (SS 02 43 10) is used to avoid over-dimensioning of the heating system. The method is based on taking the room's/building's individual time constants, i.e. heat storage abilities, into consideration, and then calculating the DOT for each building or room.

When calculating the heating effect requirement in a new building, you can usually assume an indoor temperature for ceiling heating that is one to two degrees lower than normal. This reduction, however, is only an empirical value, and during planning, you should check the sensitive parts of the building with regard to operative temperatures or other prescribed climatic factors that are temperature-dependent. The fact that a reduction in temperature is normally possible is due to the thermal radiation from the ceiling heating up the surrounding surfaces, e.g., the floor, walls and furnishings. Individuals then experience a reduction in the thermal radiation given off by their bodies. In this way, the room air temperature can be lowered by as much as the mean temperatures of the surrounding surfaces have increased, and yet maintain the correct comfort level. This applies provided that other climatic factors are kept at a constant level, and the air velocity does not exceed 0.15 m/s.

As soon as you introduce a heat source into a room and maintain a temperature above the outdoor temperature, there will be a temperature gradient in the room because of density differences between warm and cold air. The gradient is not as large in all places. It is especially near the floor and ceiling and especially the outer walls that the gradient can be non-linear. In other parts of a room, the temperature gradient is most often virtually linear. The magnitude of the temperature gradient varies with the position in the room, the temperature of the room surfaces, the room's ventilation and size, the number and placement of the heaters, involuntary ventilation, the furniture and the activity in the room [12]. As you can see, there are a number of factors that have an effect; however, quite a lot of them have a small or a very small effect on the temperature gradient.

$P_{dim} = P_t + P_{ov} + P_v$

where P_t = Effect requirement due to transmission
P_{ov} = Effect requirement due to involuntary ventilation.
P_v = Effect requirement due to ventilation

The effect supplied by internal generation in the building or room is not normally included in the calculation, if it cannot be regarded as a constant heat source.

The effect requirement due to transmission is calculated according to:

$P_t = \Sigma_i U_i \times A_i \times \Delta t_i$

A_i = The area for each part of the building (m^2)

U_i = U_p value for each part of the building ($W/m^2\ °C$)

Δt_i = Temperature difference for each part of the building, i.e. when calculating each part of the building, the temperature gradient is taken into consideration. You do not need to take the temperature gradient into consideration for low ceiling heights (approx. 2.5 to 3.5 m).

Effect requirement due to involuntary ventilation, P_{ov}, is normally assumed to be:

- Older homes: 0.4-0.6 oms/h
- Newer homes: 0.2-0.4 oms/h
- Older commercial or public premises: 0.3-0.5 oms/h
- Newer commercial or public premises: 0.1-0.3 oms/h

Effect requirement due to ventilation is calculated according to:

$P_v = q \times \rho \times c_p \times \Delta t_v$

where q = airflow outdoor air (m^3/s)

ρ = air density (kg/m^3)

c_p = air heating capacity

Δt_v = temperature difference between outdoor temperature and supply temperature.

The design effect requirement for heating is calculated according to the formula above.

We reserve the right to make changes

Lindab®

Ceiling Heating Guide

A ceiling heating system's effect on the temperature gradient is favourable. The surrounding room surfaces are heated by the thermal radiation and, in turn, give off heat, partly through radiation (secondary) to other surfaces, and partly by convection to the air. Combined, this means that the air is heated extremely evenly towards all the room surfaces. The result is a relatively small temperature gradient.

As indicated above, there are several factors other than the heating system that affect the size of the temperature gradient. The size of the gradient therefore is different from one building to another depending on the conditions in the building. In the measurements we have made ourselves, the temperature gradient in premises with ceiling heating and ceiling heights between 2.8 m and approx. 7 m is between 0.3 and 1.0° C/m with a cluster at 0.4 to 0.5° C/m. Ref. [12] lists the values for other heating systems; these are retrieved from the international literature:

- radiator systems: 1 to 2° C/m
- convective heating: 2 to 3° C/m

As previously mentioned, at higher ceiling heights, the temperature gradient plays a significant role when calculating the design heating effect requirement. In rooms with normal ceiling heights (approx. 2.5 m), the temperature gradient plays a relatively small role for the effect requirement. Below, there are examples of the influence the temperature gradient has at relatively high ceiling heights in different scenarios. The values below are calculated theoretically and are based on the following example:

A hall in the area of Gothenburg, DOT10= -10° C, with a floor area of 500, 1000 and 2000 m^2, respectively, and window area equal to 10% of the floor area.

The Up value for the wall is 0.2, for the ceiling 0.2 and for the floor 0.3 W/m^2, ° C.

The windows' Up value is set to 2.0 W/m^2, °C. Involuntary ventilation is assumed to be 0.3 oms/h. The heating effect requirement concerns only transmission and involuntary ventilation.

The effect requirement for each row is indexed against the case room temp./gradient: 20° C / 0.0° C/m for the respective row. The figures can only be compared with each other on the same row.

Relative heating effect requirement

The energy requirement for the heating comes from three factors: transmission, ventilation and involuntary ventilation. Transmission normally stands for approx. 20 to 50% and ventilation, including involuntary ventilation, for 50 to 80%. In a property heated to normal indoor temperatures (approx. 20° C), it is often said as a rule of thumb that you save approx. 5% of the energy consumption, per degree drop in the indoor temperature.

With a ceiling heating system, the indoor temperature can normally be lowered by one to two degrees, without lowering the operative temperature below that allowed [4]. Furthermore, the temperature gradient is lower with ceiling heating than with conventional heating systems.

As a result of these two factors, the losses due to transmission (especially through the ceiling) and, in particular, due to ventilation and involuntary ventilation decrease. In [3], the difference in measured energy consumption between a ceiling heating system and a radiator system is stated to be 2 to 7% in favour of ceiling heating. In a literature study [4], the energy savings with ceiling heating are measured as 6 to 30% in different premises.

A theoretical comparison of energy consumption between different systems, presented as different temperatures and different temperature gradients, is shown on page 4:33. The same premises and conditions have been used as in the comparison with design effect requirement. The energy consumption has been calculated with the degree-day method. The indicated temperature gradient is assumed to occur with the design outdoor temperature (-10° C), to then drop linearly to zero when the outdoor temperature and room temperature are equal.

The energy requirement for each row is indexed against the case room temp./gradient: 20° C / 0.0° C/m for the respective row. The figures can be only compared with each other on the same row. (see table 1).

Relative heating energy requirement

The table shows that the difference between different heating systems, or alternatively, the temperature relation, results in a difference in energy consumption that approximately corresponds to the measured economies that ceiling heating gave in the above references. It is obvious that the amount of energy savings varies depending on the conditions. Nevertheless, it is quite clear that a ceiling heating system provides an energy consumption that is lower than that for most other heating systems. (see table 2).

Ceiling Heating Guide

1
2
3
4
5
6
7
8
9
10
11
12
13
14
15
16
17
18
19

Table 1 – Relative heating effect requirement

		Room temp./gradient (°C and °C/m, respectively)				
Area (m)²)	**Ceiling height (m)**	**20/0.0**	**20/0.5**	**20/2.0**	**18/0.5**	**18/0.2**
500	5 10	1.00 1.00	1.04 1.08	1.17 1.33	0.96 1.01	1.09 1.26
1000	5 10	1.00 1.00	1.04 1.09	1.18 1.35	0.97 1.02	1.10 1.28
2000	5 10	1.00 1.00	1.05 1.09	1.18 1.35	0.97 1.02	1.11 1.29

Table 2 – Relative heating energy requirement

		Room temp./gradient (°C and °C/m, respectively)				
Area (m)²)	**Ceiling height (m)**	**20/0.0**	**20/0.5**	**20/2.0**	**18/0.5**	**18/0.2**
500	5 10	1.00 1.00	1.04 1.09	1.17 1.34	0.89 0.94	1.01 1.18
1000	5 10	1.00 1.00	1.04 1.09	1.17 1.34	0.89 1.94	1.01 1.18
2000	5 10	1.00 1.00	1.04 1.09	1.17 1.34	0.89 0.94	1.01 1.18

We reserve the right to make changes

Ceiling Heating Guide

Chapter VIII

Environment and recycling

Life cycle analyses (LCA) that have been produced for aluminium products show many common features. The material's production stage (mining, concentration and production) contributes a relatively high load factor to both energy and environment. Compared to other materials, the reverse is observed in the product utilisation phase. The load for aluminium products in the production stage is sometimes fully compensated by their lower impact on the environment in the utilisation phase.

Moreover, if the aluminium is recycled, the impact on the environment from the production stage is further reduced to a corresponding degree.

Lindab Comfort's ceiling heating systems consist exclusively of copper, aluminium, an insulating sheet of expanded polystyrene and a small amount of tin solder. All component materials, except for the insulating sheet, are up to 100% recyclable. All production waste goes for recycling, even today.

When a building, where Lindab Comfort's ceiling heating products are installed, is demolished, 100% of the metals they contain can be recycled. Certainly, the aluminium and copper are bonded metallurgically in the manufacturing process and cannot be separated, but nevertheless recycling is still possible. The ceiling heaters are pressed in a package of approx. 20 × 20 cm and are used in the metal industry as alloying materials for different aluminium qualities. The proportion of copper is well defined in each of the packages, as each centimetre of a panel contains the same percentage of copper.

[20] presents life cycle assessments (LCA) for different packaging materials, e.g. aluminium and sheet steel. A comparison between these materials is presented below, without recycling and with 70 to 75% recycling. The presented values are not translatable to Lindab Comfort's ceiling heating products, since LCA applies only for a specific product and its special conditions during its service life. The absolute values are therefore not applicable to Lindab Comfort's products.

What we wish to show with the diagrams on this and the next page, however, is that the load on the environment falls dramatically with a good degree of recycling and that aluminium, from an environmental aspect, is equal to sheet steel with 70 to 75% recycling. Nowadays, the degree of recycling is low when a house is demolished, but in the future, developments in this area will probably go quickly and then, recycling degrees of 70 to 75% will not be unusual. For this reason, you can assume with great certainty that the products from Lindab Comfort installed today will be recycled when the building they are installed in is demolished or re-built.

Discharge of different substances

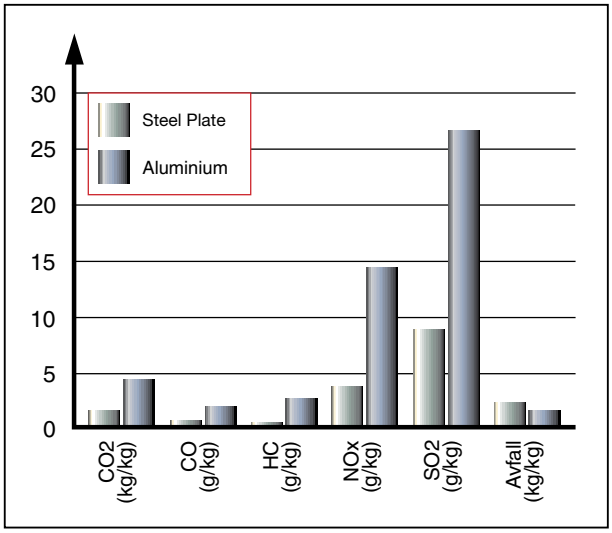

LCA values for packaging without recycling

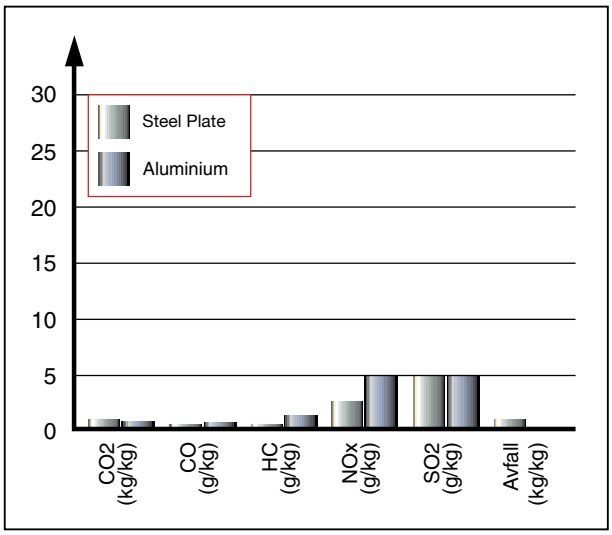

LCA values for packaging with 70 to 75% recycling

Ceiling Heating Guide

Use of different types of energy

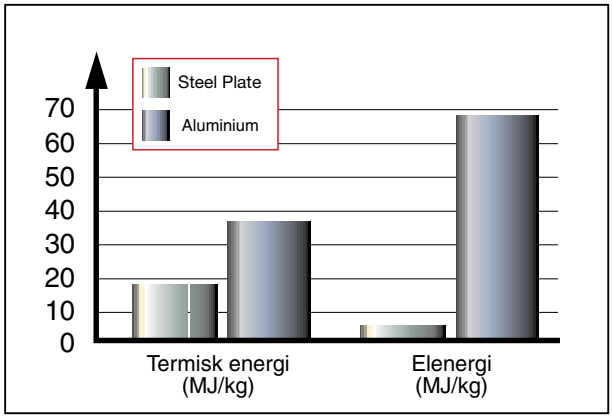

LCA values for packaging without recycling

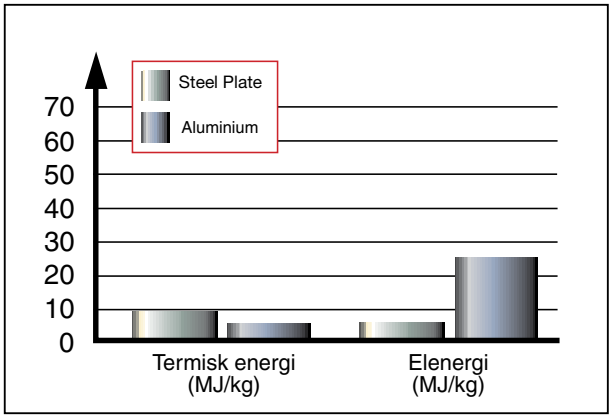

LCA values for packaging with 70 to 75% recycling

References

[1] damsson/Löfstedt: Takvärme, Temperaturfördelning och behaglighet, (Ceiling heating, Temperature distribution and Comfort): The Swedish Institute for Building Research, Report R12:1971, 1971

[2] Lind/Olsson: Klimatmätningar i skolor med elektrisk takvärme och fläktstyrd frånluftsventilation (Climate measurements in schools with electric ceiling heaters and fan controlled exhaust ventilation): The Swedish Institute for Building Research, Report R40:1972, 1972

[3] Johansson/Pettersson: Takvärme – energiförbrukning och inomhusklimat (Ceiling heating – energy consumption and indoor climate): The Swedish Institute for Building Research, Report R12:1984, 1984

[4] Brännvall: Takvärme – kritisk granskning av olika uppvärmningssystem, litteraturstudie: (Ceiling heating – critical review of different heating systems, literature study) KTH Inst. for Heating and Oven technology, Stockholm 1977

[5] Jacobsson/Lindgren: Kallras vid fönster – en förstudie (Draught by windows – a pilot study): Wahlings installationutveckling AB, Stockholm 1982

[6] Peterson: Kallras vid konvertering (Draught with convesion): KTH Inst. for Heating and Ventilation Technology, A4-series no. 140, Stockholm 1991

[7] Al-Bazi: Klimat och byggnader nr 1/1989 (Climate and buildings no 1/1989): KTH Inst. for Heating and Ventilation Technology, Stockholm 1989

[8] SCANVAC, Classified indoor climate systems, guide lines and specifications: Swedish Indoor Climate Institute, Guideline series, R1

[9] Allard/Inard/Simoneau: Experimental study and numerical simulation of natural convection in a room with heated ceiling or floor: ROOMVENT '90 Engineering Areo- and Thermodynamics of Ventilated Room, second international conference, Oslo 1990

[10] Krause: Die konvektive Wärmeabgabe von Heizdecken: Gesundheiz-ingenieur no. 10 and 11, 1959

[11] Müllejans: Uber die Ähnlichkeit der nichtisotermen strömung und den Wärmeübergang in Raümen mit Strahllüftning: Forschungsberichte des landes Nordrein-Westfalen, no. 1656, 1966

[12] Peterson, F: Temperaturgradienter vid olika uppvärmningssystem (Temperature gradients with different heating systems): Technical Notice no. 65, KTH Inst. for Heating and Ventilation Technology, 1975

[13] Pierre, B: Mekanisk Värmeteori fk del 2 (Mechanical Heating Theory part 2) Kompendium, Institution for Mechanical Heating Theory and Cooling Technology, KTH 1979

[14] Duffie, J, Beckman, W: Solar Engineering of Thermal Processes: Wiley & Sons 1980

[15] McIntyre, D. A.; The Thermal Radiation Field; Building Science Vol 9, 1974

[16] McIntyre, D. A, Griffiths I. D.; The effect of uniform and asymmetric thermal radiation on comfort; Proc. of the 6th international congress of climatistics "clima 2000", Milan, March 1975

[17] Chrenko, F. A.: Heated ceilings and comfort; Journal of the Inst. of Heating and Ventilation Engineers, January 1953

[18] Olesen B. W. et al.: Thermal comfort in a room heated by different methods: ASHRAE transactions, vol 86 part one, 1980

[19] Fransson, J et al.: Utvärdering av Bo-klimat och fukt-styrning I Falun: Swedish Committee for Building Research, SPAR 1993: 67

[20] Tillman A-M. et al.: Packaging and the environment-Life-cycle analyses of selected packaging materials – Quantification of environmental loadings; Chalmers Industrial Technology, Gothenburg 1992

[21] Fanger P.O.: Thermal Comfort, Analysis and Applications in Environmental Engineering: Danish Technical Press, Copenhagen 1970.

We reserve the right to make changes

Ceiling Heating Guide

Dimensioning key

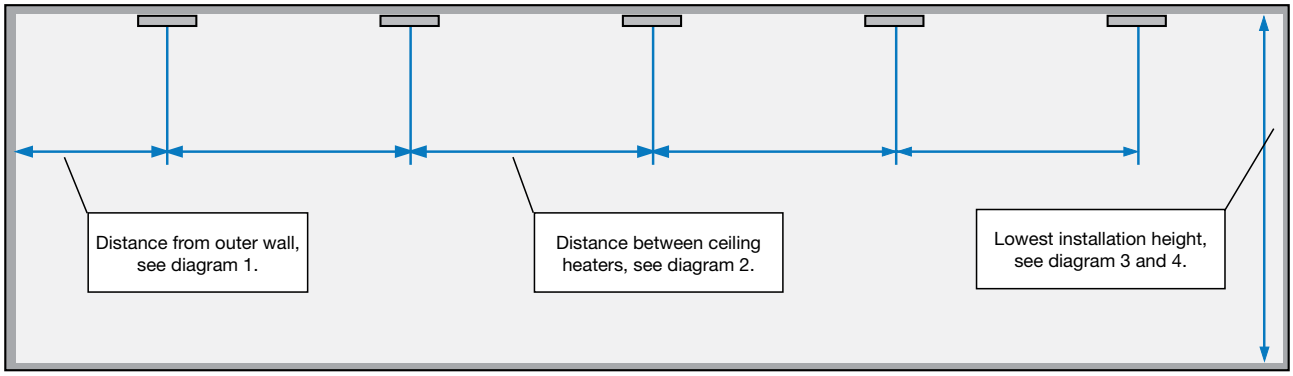

Placement of the panels

You should try to follow the following rules of thumb so as to achieve as uniform distribution of thermal radiation as possible.

Against outer walls without windows, the panel closest to the wall should be placed as shown in diagram 1.

Against an outer wall with windows: if the outer wall contains standard or large glass surfaces, the panels can be positioned closer to the wall. The heating effect should be concentrated so as to lower the risk of draughts and to reach the required operative temperature values. Concentration is rarely needed with smaller windows. It is difficult to give rules of thumb in these cases, as the variations in window size and building designs are big.

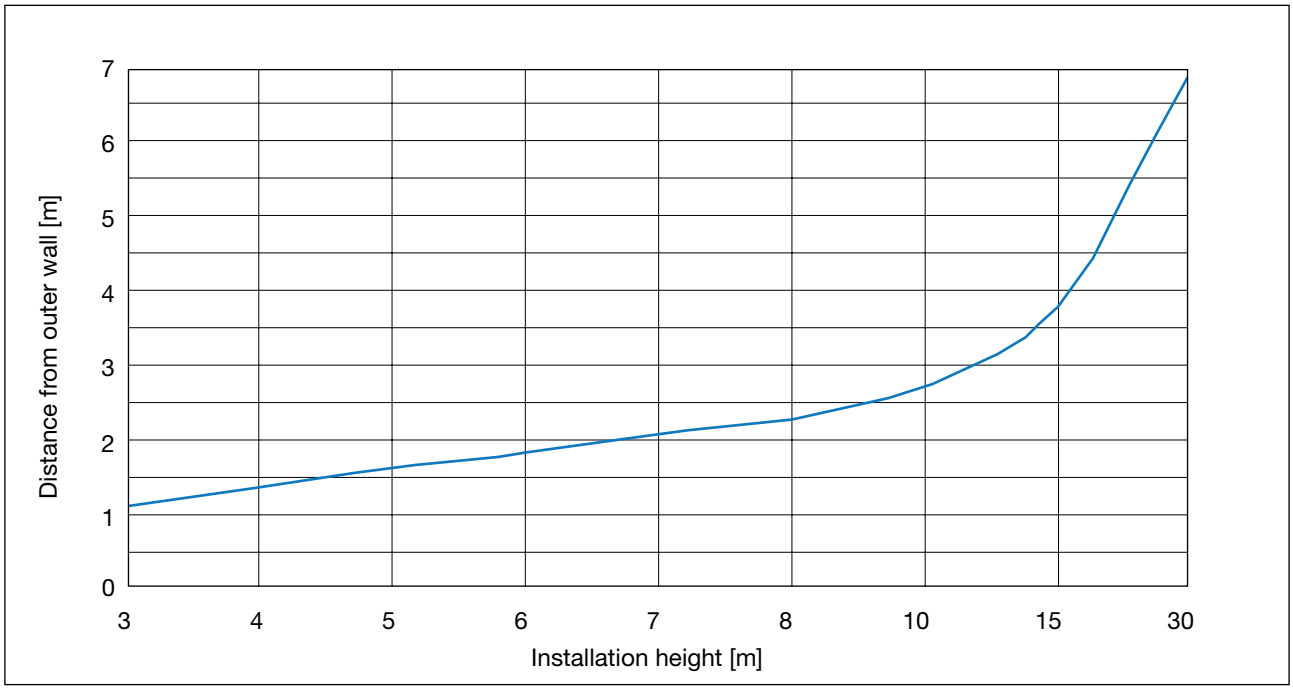

Diagram 1. Recommended distance between the ceiling heater closest to the outer wall and the outer wall (without window).

Ceiling Heating Guide

1
2
3
4
5
6
7
8
9
10
11
12
13
14
15
16
17
18
19

Placement of the panels

The spacing between panels/strips is clear from figure 2. The recommended spacing between panels/strips is presented in the diagram as a function of the installation height. With the recommended spacing, the thermal radiation is the same both between the heaters and beneath them.

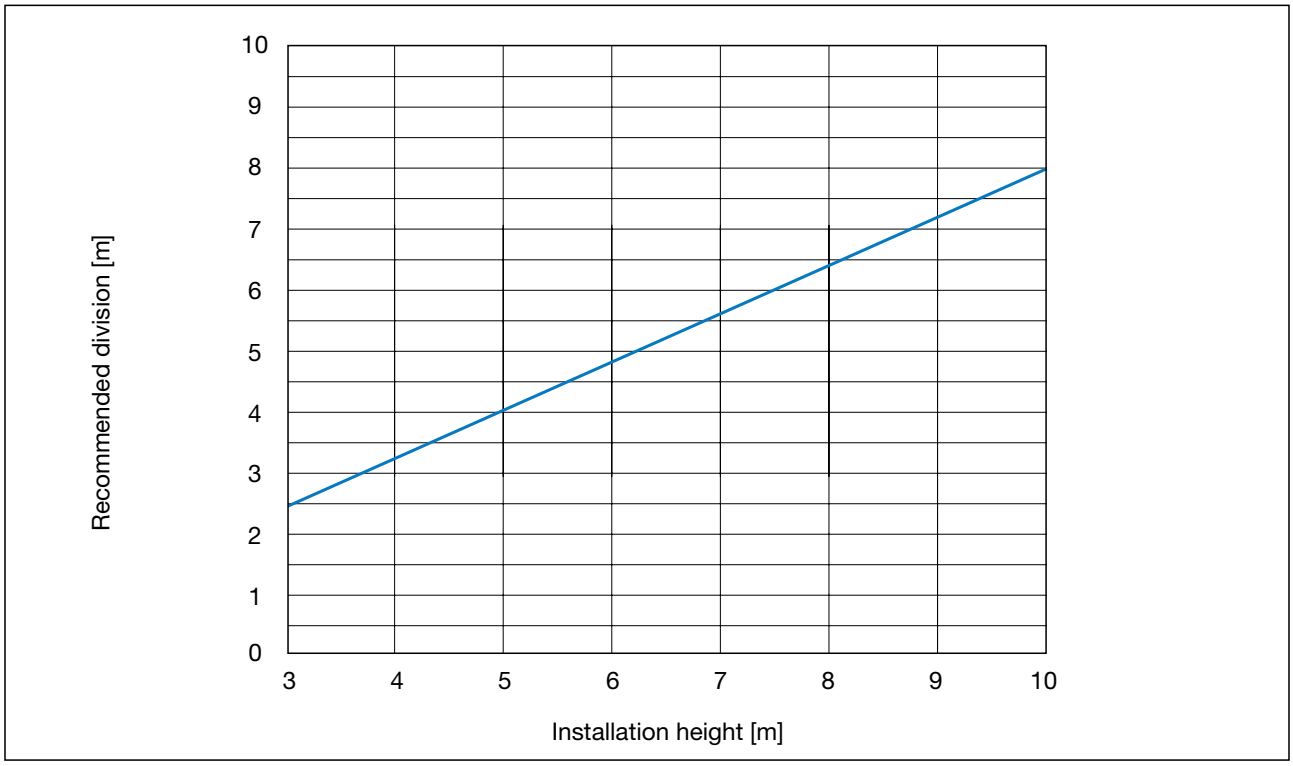

Diagram 2. Recommended distance between panels with ceiling heating.

We reserve the right to make changes

Ceiling Heating Guide

Dimensioning key

Installation height and temperature

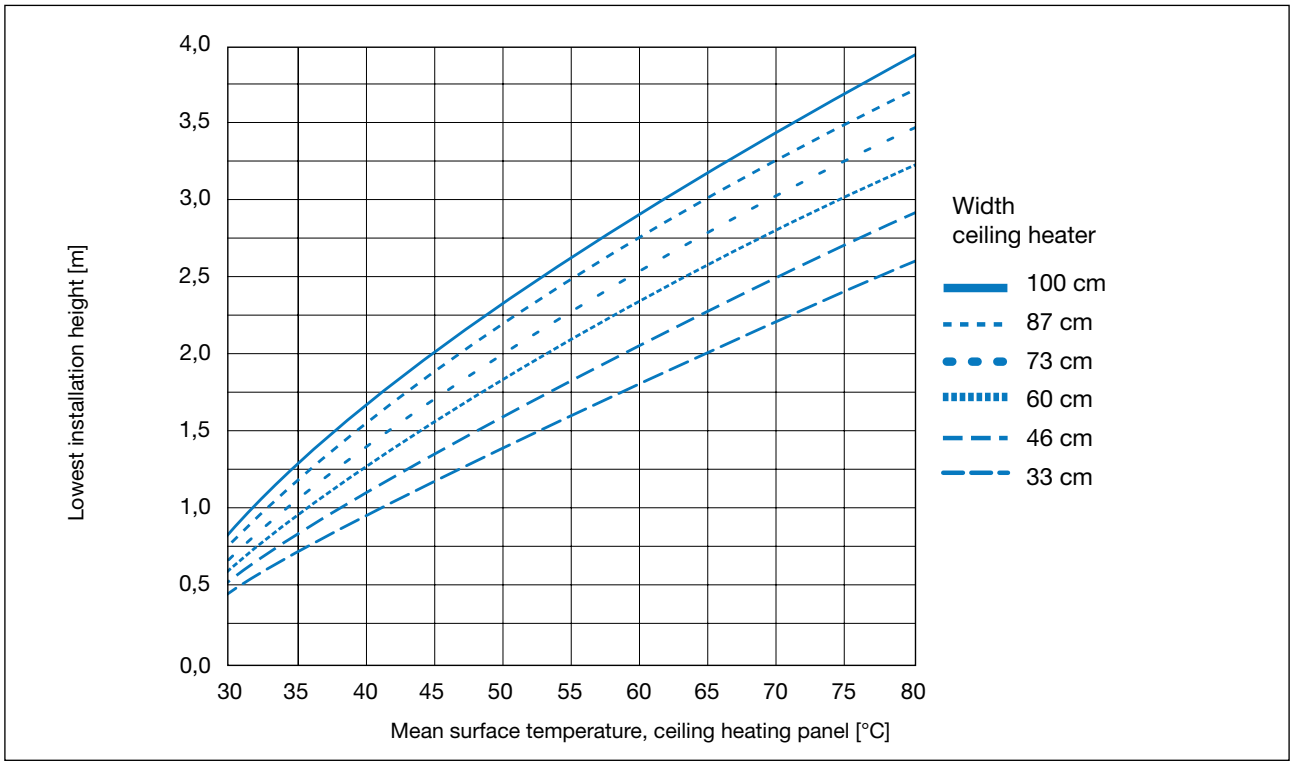

Diagram 3. Lowest installation height for ceiling heaters with radiant temperature asymmetry of 5° C. Ceiling heater length 3.6 m.

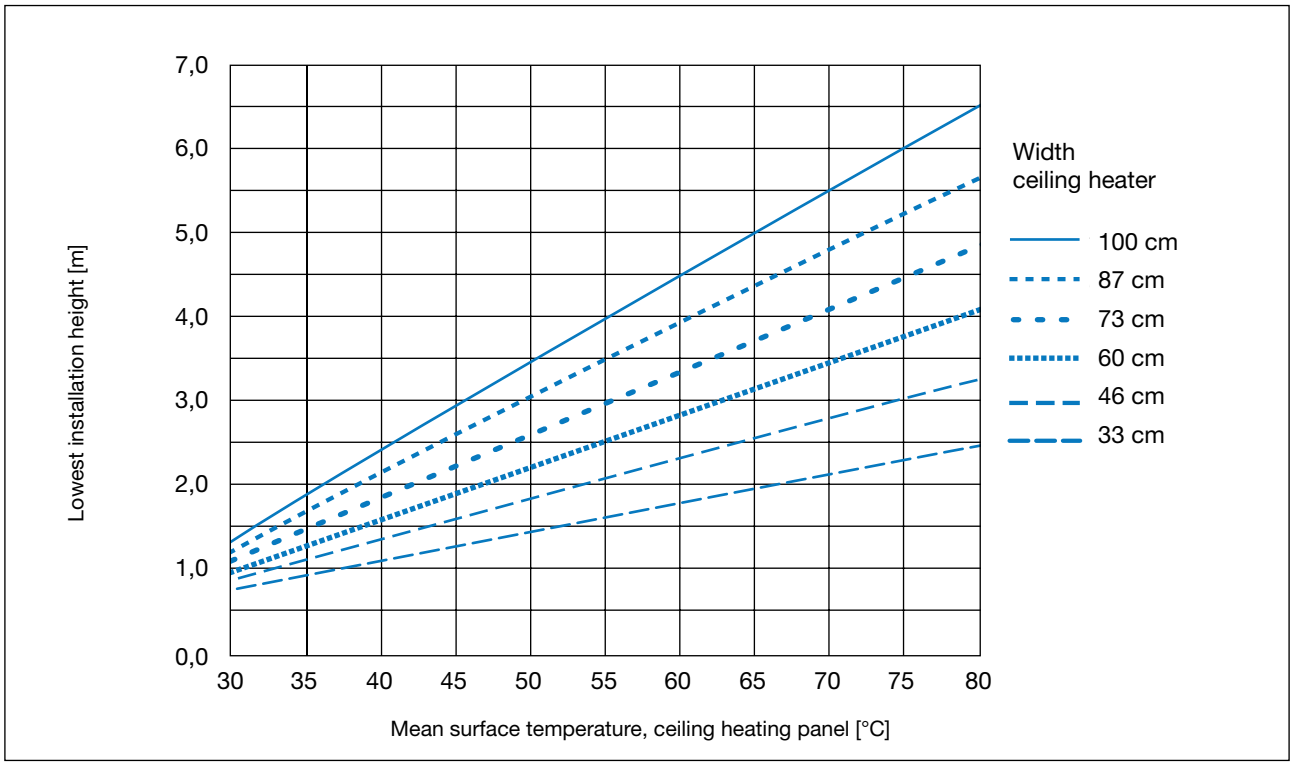

Diagram 4. Lowest installation height for ceiling heaters with radiant temperature asymmetry of 5° C. Ceiling heater length >10 m.

Ceiling Heating Guide

1
2
3
4
5
6
7
8
9
10
11
12
13
14
15
16
17
18
19

Quick facts

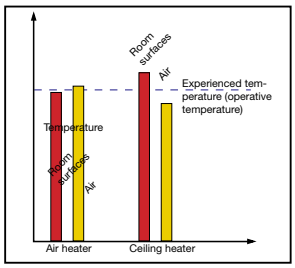

Ceiling heating heats the surfaces of the room via thermal radiation. The surfaces, in turn, heat the air. This provides the preconditions for a very good indoor climate.

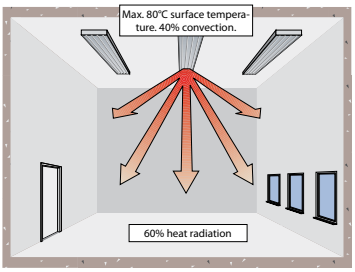

The ceiling height is of no importance for the heat transfer to the entire premises. The ceiling heater's temperature, therefore, does not need to be higher at higher ceiling heights.

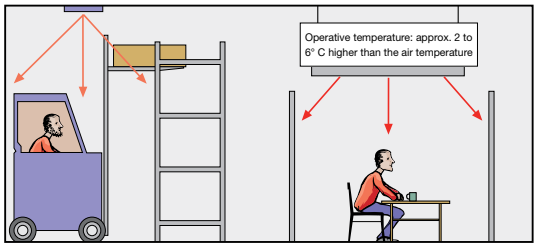

Ceiling heating also works perfectly for zone heating in larger premises. Heating of the adjacent surfaces and the ceiling heater itself means that the operative temperature can be increased by at least 2 to 6°C above the air temperature.

It will not be cold under a table, as the thermal radiation radiates indirectly from all surfaces in the room. All surfaces in the room contribute to the heating either by absorbing thermal radiation, being heated and radiating the heat, or by reflecting it.

Your head will not be too hot. Lindab Comfort's ceiling heaters are water-borne with a standard max. temperature of approx. 40 to 60° C, and are usually installed at an installation height of over 2.5 m. As a result, the thermal radiation from the ceiling heaters is barely noticeable.

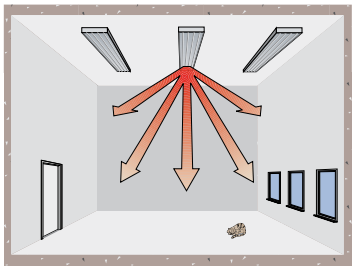

Ceiling heating is indirect floor heating! Radiant heat normally makes the floor 2 to 3° C warmer than the air directly above the floor.

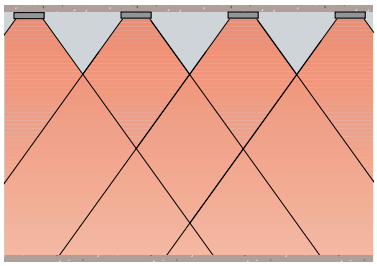

Thermal radiation spreads to all parts of the room that the ceiling heater can "see". Most radiation goes downwards and diminishes towards the sides. Thermal radiation is also guided, depending on the temperature of the recipient.

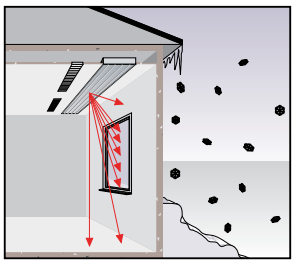

The effect from thermal radiation increases towards colder surfaces. This means that the heat goes directly to where it is needed the most, e.g. it warms the inside of windows so that the risk of draughts is eliminated.

Ceiling heating is among the most energy-efficient heating systems available. Ceiling heating allows 1 to 2° C lower room temperatures and gives a very small temperature gradient in the premises, i.e. no heat cushions are formed by the ceiling.

Ceiling-heating systems can be modified easily when the activity is changed. You do not need to take the ceiling system into consideration when modifying the walls and floor.

We reserve the right to make changes

Chilled ceiling guide, natural convection

Contact, Overview, Index	1
Ceiling Heating/Chilled	**2**
Plexus	3
Professor	4
Pilot	5
Architect	6
Polaris I & S	7
Plafond	8
Podium	9
Celo	10
Cabinett	11
Capella	12
Carat	13
Fasadium	14
Atrium H & C /Loggia	15
Regula	16
Drypac™	17
Lighting	18
TEKNOsim	19

© 03.2009 Lindab Ventilation A/S. All forms of reproduction without written permission are forbidden. Lindab® is the registered trademark of Lindab AB.
Lindab's products, systems, product and product group designations are protected by intellectual property rights (IPR).

Chilled ceiling guide, natural convection

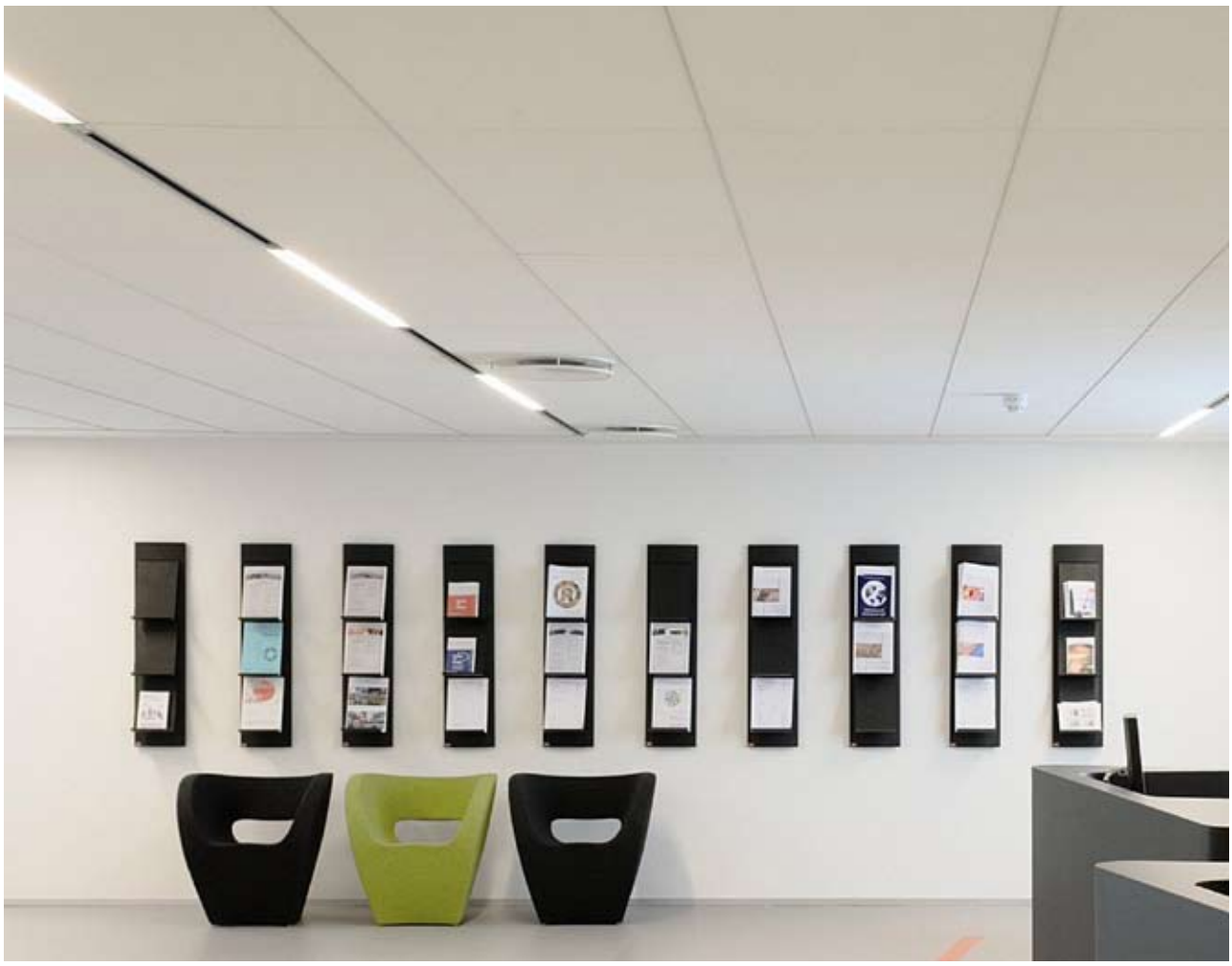

Function

A chilled beam is a heat exchanger that transfers the heat in the room air to a cooling water circuit.

Heat transfer between the room air and a surface is achieved in two ways, in part, through heat radiation between the surface of the beam and the surrounding surfaces of the room and, in part, as convection between the air closest to the surface and the surface itself. These two heat transfer values are then added together to form the total heat transfer.

Chilled ceiling guide, natural convection

1 2 3 4 5 6 7 8 9 10 11 12 13 14 15 16 17 18 19

Natural convection technology

Heat transfer

A chilled beam is a heat exchanger which transfers the heat in the room air to a cooling water circuit. To avoid condensation, the temperature of the water supplied to the beam must not be too low (approx. +14° C). In the first stage, the heat in the room air is transferred to the surfaces of the chilled beam, and then it is conducted from the surfaces towards the pipe walls, where the next transfer, to the cooled water, takes place. Of the temperature difference between the temperature of the room air and the temperature of the cooling water circuit, 80 to 90% is between the air and the surface, and only 10 to 20% is between the pipe wall and the water. This applies, provided there is a turbulent flow in the water and arises because the heat transfer coefficient is many times higher in water than in air.

Heat transfer between the room air and a surface is achieved in two ways, in part, through heat radiation between the surface of the beam and the surrounding surfaces of the room and, in part, as convection between the air closest to the surface and the surface itself. These two heat transfer values are then added together to form the total heat transfer.

Heat transfer by radiation
It is important to know that heat transfer by radiation is only a transfer heat between the surfaces of the chilled beam and the surfaces of the room. This depends on the temperature difference between the surfaces and is independent of the temperature of the air.
It is relatively easy to calculate heat transfer by radiation by using the radiation equation:

$$P = A \times \varepsilon_t \times 5.67 \times \left(\left(\frac{T_{chilled\ beam}}{100} \right)^4 - \left(\frac{T_{room}}{100} \right)^4 \right)$$

P = effect (W)
A= area (m²)
ε_t = total emission coefficient
5.67= Stefan-Boltzman's constant
T= temperature (K) (°C + 273)

ε is the ability of the material to absorb and emit heat. All normal materials in a room, apart from shiny metal, have an ε value of 0.88-0.97. Enamelled surfaces have an ε value of approx. 0.95, whereas glass, bricks and other materials have an ε value of approx. 0.9. For shiny metal, the ε value is approx. 0.1. This means that heat transfer through radiation cannot be utilised if the surfaces of the chilled beam or of the room are of shiny metal.

Assuming that the surfaces of the room completely surround the chilled beam, which is the most common situation, area A is counted as the surrounding area of the chilled beam. The surface of the chilled beam normally has an ε value of 0.95. The total ε_t value is the value of the surface of the chilled beam multiplied by the ε value of the surfaces of the room. The ε value of the surfaces of the room can vary a bit, but as a rule, a ε value of 0.94 is selected for ordinary rooms.

The total ε_t value is therefore:

$0.95 \times 0.94 \approx 0.9$

An ε_t value of 0.9 is a good value to use for estimates.

Example
A 2 m strip beam (Capella Classic-53) has a surrounding heat transfer area of 2.6 m². This area has a temperature of + 16° C and the room surfaces a temperature of + 24° C. The value of the emission coefficient, ε_t, is assumed to be 0.9. What is the cooling effect provided by the chilled beam by radiation?

$$P = 2.6 \times 0.9 \times 5.67 \times \left(\left(\frac{289}{100} \right)^4 - \left(\frac{297}{100} \right)^4 \right)$$
P = 107 W

Heat transfer by convection
Heat transfer by convection describes the process that occurs between the plate surface and the room air, which is very close to the plate surface. The heat transfer is calculated using the following equation:

$P = \alpha \times A \times (T_{chilled\ beam} - T_{room})$
P = effect (W)
α= heat transfer coefficient (W/m²,°C)
A= area (m²)
T= temperature (K) (°C + 273)

Example
A 2 m strip beam (Capella Classic-53) has a surrounding heat transfer area of 2.6 m². This area has a mean temperature of + 16° C and the room's air a temperature of + 24° C. The mean value for all the heat transfer coefficient for all surfaces α, is assumed to be 10. What is the cooling effect provided by the chilled beam through convection?

$P = 10 \times 2.6 \times (289 - 297)$
P = 208 W

Conclusion
According to the calculation example above, the cooling effect provided by radiation is approx. 107 W and by convection approx. 208 W. This gives a radiation percentage of approx. 34% and a convection percentage of approx. 66%.

One problem with calculating heat transfer by natural convection is to find the correct heat transfer coefficient α value. The heat transfer coefficient between the air and the surface varies, partly depending on the temperature difference and, in part, on the size and inclination of the surface. A higher temperature difference results in a greater heat transfer coefficient. Horizontal surfaces provide a higher heat transfer coefficient for small surfaces (less than 1 m wide).

We reserve the right to make changes

Chilled ceiling guide, natural convection

While a flat vertical surface, which is approx. 1 m wide, has a heat transfer coefficient of only 3 W/m² °C, a 5 cm wide surface has a heat transfer coefficient of 5 W/m² °C, and 1 cm wide surface has a heat transfer coefficient of 10 W/m² °C (a temperature difference of 10° C).

To increase the effect of a natural convection beam, the cooled air, which is somewhat heavier, can be utilised. This can be done by manufacturing a chilled beam with higher sides, where a cold heavy volume of air develops beneath the beam, and it increases the air velocity past the surfaces of the chilled beam, thereby increasing the heat transfer coefficient.

Why is it important to calculate radiation and convection?
Since radiation concerns heat transfer between surfaces, it does not affect the air velocities in the room. On the other hand, heat transfer by convection creates air movement since for it to take place, air must pass through the heat-transfer surfaces.

When making calculations for natural convection beams and resulting air velocities, only the convective transfer can be taken into account when it comes to the creation of air movements.

Picture 1. The strip product Capella can be installed suspended and in a suspended ceiling.

Static and dynamic pressure and their effect on air movements in a room.

When the air in a room reaches a certain velocity, it tends to drag the adjacent air along, which, in turn, affects the resulting air velocity in the room. What happens to the air movement in a room can be explained theoretically with a simple equation:

$$P_{total} = P_{static} + P_{dynamic}$$
$$P_{dynamic} = \frac{\delta \times v^2}{2}$$

P_{total} = total pressure (Pa)
P_{static} = static pressure (Pa)
$P_{dynamic}$ = dynamic pressure (Pa)
δ = density (kg/m³)
v = velocity (m/s)

This equation explains the phenomena that occur in a room and it also explains why an airplane can fly, a sailboat can go against the wind, and an induction beam can work, and it also explains many air velocity phenomena that occur under natural convection beams.

The dynamic pressure is the same as the velocity pressure, i.e. the pressure that is formed as a result of the air velocity. In a room, the total pressure is always the same, unless there is a pressure drop. This means that if an air velocity is created, there is dynamic pressure, which automatically creates lower static pressure in the room. A volume unit in an air jet, which has a velocity, has lower static pressure than the surrounding air, and as a result, the surrounding air will accelerate towards the air jet and in doing so, will compress it and make the air jet narrower.

When the heavier, colder air leaves the natural convection beam with a certain velocity, the room air from the sides will move towards the air jet and compress it. This means that the air velocity underneath a natural convection beam is higher when it is below the beam than when it leaves the outlet of the beam. As a result, air velocities are also relatively similar under all natural convection beams, irrespective of the width of the respective beam. A wide beam creates a narrower column of air a few decimetres below the beam, with a similar column shape, is created by a narrower beam.

Chilled ceiling guide, natural convection

1 2 3 4 5 6 7 8 9 10 11 12 13 14 15 16 17 18 19

If natural convection beams are placed close to each other, with only a small separation between them, there will not be enough room air between the air streams, and the low static pressure in the air streams will cause the room air to compress these into a single air stream with a higher air velocity.

The same phenomenon occurs if a natural convection beam is placed close to a wall. The room air cannot pass between the air stream and the wall but instead presses the air stream from the beam towards the wall. This phenomenon is called the Coanda effect when it occurs near the ceiling. However, it also occurs when a natural convection beam is placed close to a wall.

The compression of the air jet that occurs below the beam, as a result of the pressure exercised by the room air, decreases lower down when the room air mixes with the cooled air. The air becomes lighter and expands. Where this occurs, depends to a certain extent on the height of the room. In a high room, the air falls further below the natural convection beam before it expands. In a lower room, the air has a shorter distance to go since the floor completely stops the air stream. The air velocity is relatively independent of the ceiling height in normal rooms with a ceiling height of 2.5 to 3.0 m.

Draughts are more than air velocity

A Draught is normally defined as undesired local cooling of part of the body and is caused by air movements. The experience of draughts is affected by the air velocity, the air temperature and the turbulence intensity.

As mentioned before, turbulence in the air stream also has a significant influence on the risk of draughts. A measure of turbulence is the turbulence intensity. Turbulence intensity is an expression of how much the air velocity in an air stream varies in relation to the mean velocity of the air stream; i.e. it is the combination of air velocity, air temperature and turbulence intensity that determines the risk of experiencing a draught. Different relations between air velocity, air temperature and turbulence intensity can generate the same level of draught risk.
The formula for turbulence intensity is, as follows:

$$T_u = \frac{SD_v}{\bar{v}} \times 100$$

T_u = turbulence intensity
SD_v = standard deviation
$\bar{v}$= mean velocity

Example
What is the turbulence intensity when the standard deviation is SDv = 0.05 m/s and the mean velocity is $\bar{v}$ = 0.16 m/s?

$$T_u = \frac{0.05}{0.16} \times 100$$

T = 31%

Comparison between battery and strip products

Depending on how the natural convection products are manufactured, they can be divided into two groups, battery and strip products. Battery products utilise convection, whereas strip products utilise convection and radiation for their heat transfer.

The battery products (see picture 1) include a cooling battery, which consists of copper pipes with transversely positioned aluminium fins, 5 mm apart from each other. This battery is designed to transfer heat through convection. The design allows the creation of a very large heat transfer surface in a small volume. Thus, the products can be made relatively small and still be highly efficient. Moreover, the battery can be built in so that only the supply and return are visible. As a result, the products are flexible, from the point of view of design. Since the battery is located inside the product, very little of the cold is conducted out to the product casing, which means that the cooling effect is achieved solely through convection.

The strip products (see picture 2) are built up in a way completely different from the battery products. Here the energy is transferred completely to the outer surfaces of the product.

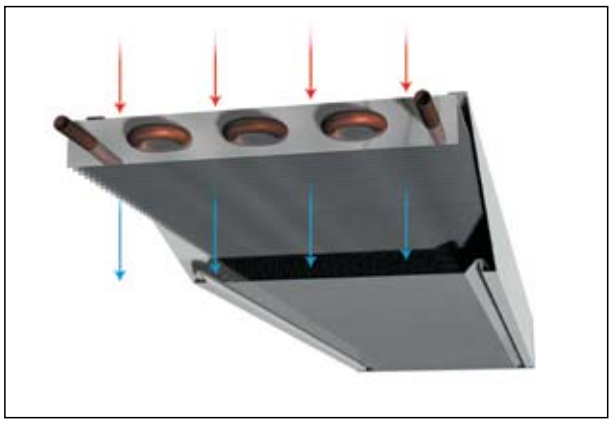

Picture 2. In a battery beam, heat transfer is achieved via convection.

Picture 3. In a battery beam, heat transfer is achieved through both convection and radiation.

We reserve the right to make changes

Chilled ceiling guide, natural convection

The surfaces, however, can be opened by way slots or perforations to allow an air stream to pass through, thereby increasing the effect per material/surface unit. These openings are usually shaped like narrow fins so as to achieve high heat transfer coefficients. In this way, we can get a product that transfers heat or cold with relatively small surfaces. As the surfaces are located entirely inside the casing – so as to allow radiation exchange between the casing and the room surfaces, the surrounding area of the product becomes somewhat larger than that of a corresponding battery product The technology also has certain aesthetic limitations, if its operation is to be adequate. A strip product can naturally be placed above a perforated suspended ceiling; however, the radiation quotient will be lower than with suspended installation.

The advantage of strip products compared to battery beams is that they can provide approx. 50% higher effect with the same air velocity, due totally to the radiation quotient. A smaller total surface also results in a light product, which is easier to clean. The strip beams transfer their energy by means of natural convection in the thin slots and by radiation. This means that unlike a battery beam, the effect curve is almost linear in relation to the temperature increase. If the temperature difference between the mean water temperature and the room temperature is 4° C, the effect yield is approx. half of the yield provided with a temperature difference of 8° C. This means that in a dynamic temperature process, where the room temperature varies during the day, the accumulation of cooling in the building structure can be utilised more efficiently.

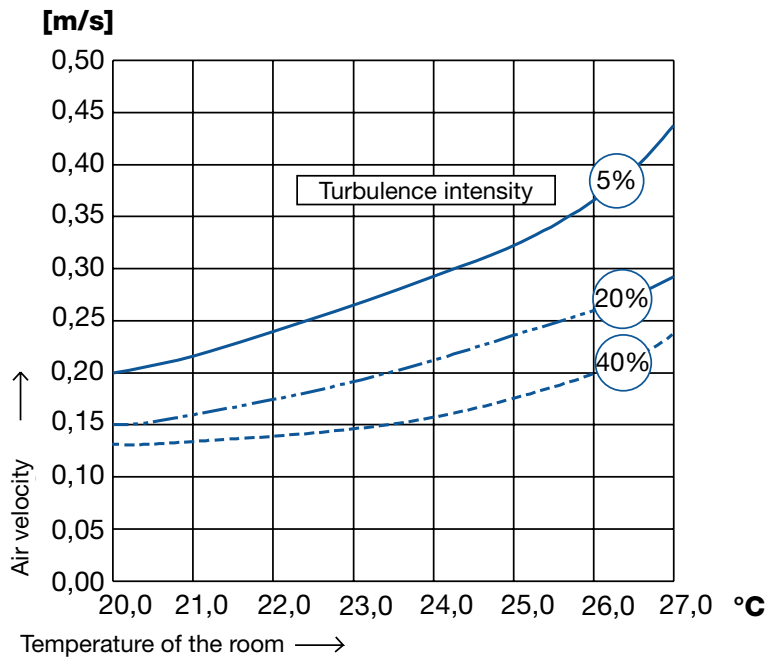

Diagram 1. Based on the calculated turbulence intensity and the temperature of the room air, the maximum air velocity that does not create draughts can be read off from the diagram DIN 1946.

Chilled ceiling guide, natural convection

The result is a lower room air temperature at the same installed effect. This also means that strip beams are relatively independent with regard to placement, unlike battery beams that require a certain velocity through the fins to work and are more sensitive to misplacement and obstacles in the air stream.

The radiation emitted by the strip products also means that the experience of the climate is better at the same room temperature. Since approx. 30 to 35% of the cooling effect is transferred by radiation, there is a direct heat exchange between an individual and the chilled beam, which means that it feels somewhat cooler with the same ambient air temperature.

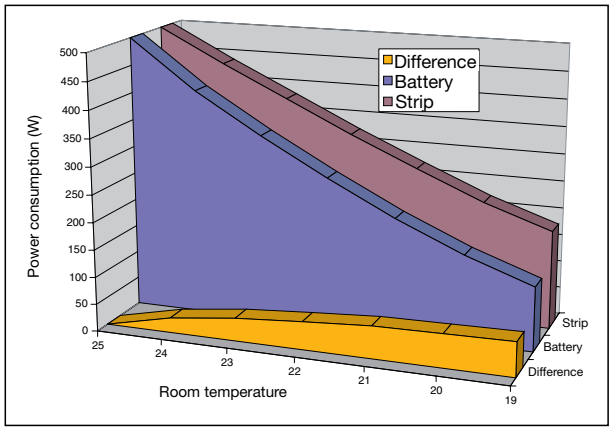

Diagram 2. This diagram illustrates the battery and strip products in a dynamic process. It shows that strip products have higher power consumption than the battery products, up to the room's maximum temperature of 25° C.

We reserve the right to make changes

Chilled ceiling guide, natural convection

Measurements & calculations

Presentation of measurements and calculations of air velocities

All measurements and tests presented in this Guide were conducted in Lindab Comfort's climate laboratory, a modern equipped laboratory, with high flexibility for different types of measurements.

The measurements were conducted in accordance with the Guidelines for the Measurement of Air Velocities of the Swedish Association of Heating and Ventilation Engineers. The measured values are presented as the mean values of a measurement series at certain selected measuring points during a period of 3 minutes. The heating was supplied to the measurement room through the walls and floor in order to minimise its effect on air velocities. Air velocities in the occupied zone were calculated as the mean value between 1200 and 1800 mm above the floor, with the bottom side of the beam at 2600 mm above floor level.

The measuring instruments used were of the type ALNOR, model AVT-75. The measuring points were placed with c-c 100 mm at heights of 100, 1200 and 1800 mm above floor level.

Battery beam refers to a chilled beam that consists of a finned battery with transversely positioned fins attached to a copper pipe. An ordinary battery beam conducts approx. 95% of the heat transfer via convection and approx. 5% via radiation.

Strip beam refers to a chilled beam that consists of pipes with fins forming the surfaces of the beam. The top and bottom sides are slotted to allow air to pass through. An ordinary strip beam conducts approx. 65 % of the heat transfer via convection and approx. 35 % via radiation.

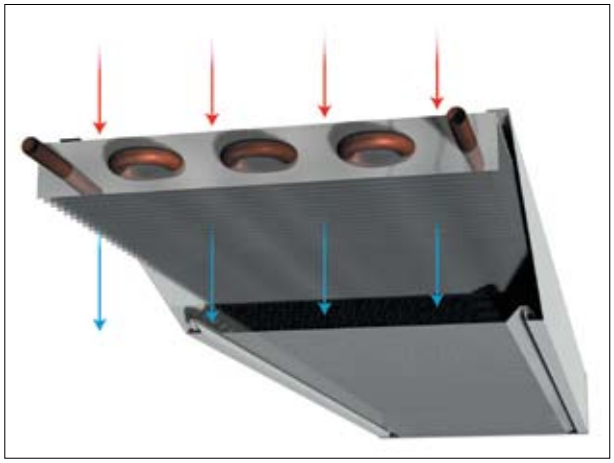

Picture 4. Operation, battery beam

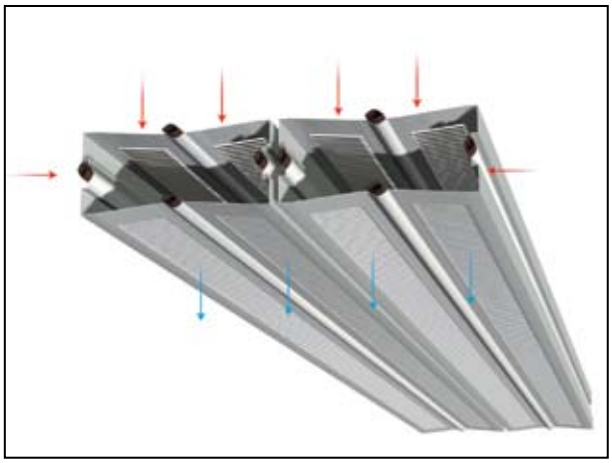

Picture 5. Operation, strip beam

Chilled ceiling guide, natural convection

1
2
3
4
5
6
7
8
9
10
11
12
13
14
15
16
17
18
19

Measurements & calculations

Effect per active metre at different air velocities for strip and battery beams

Diagram 3 shows air velocity in the occupied zone under a battery or strip beam in a room with a ceiling height of 2.6 m. The diagram illustrates, for example, that with a maximum air velocity of 0.25 m/s, the value of 110 W/m and 175 W/m per beam should not be exceeded for a battery beam and a strip beam, respectively.

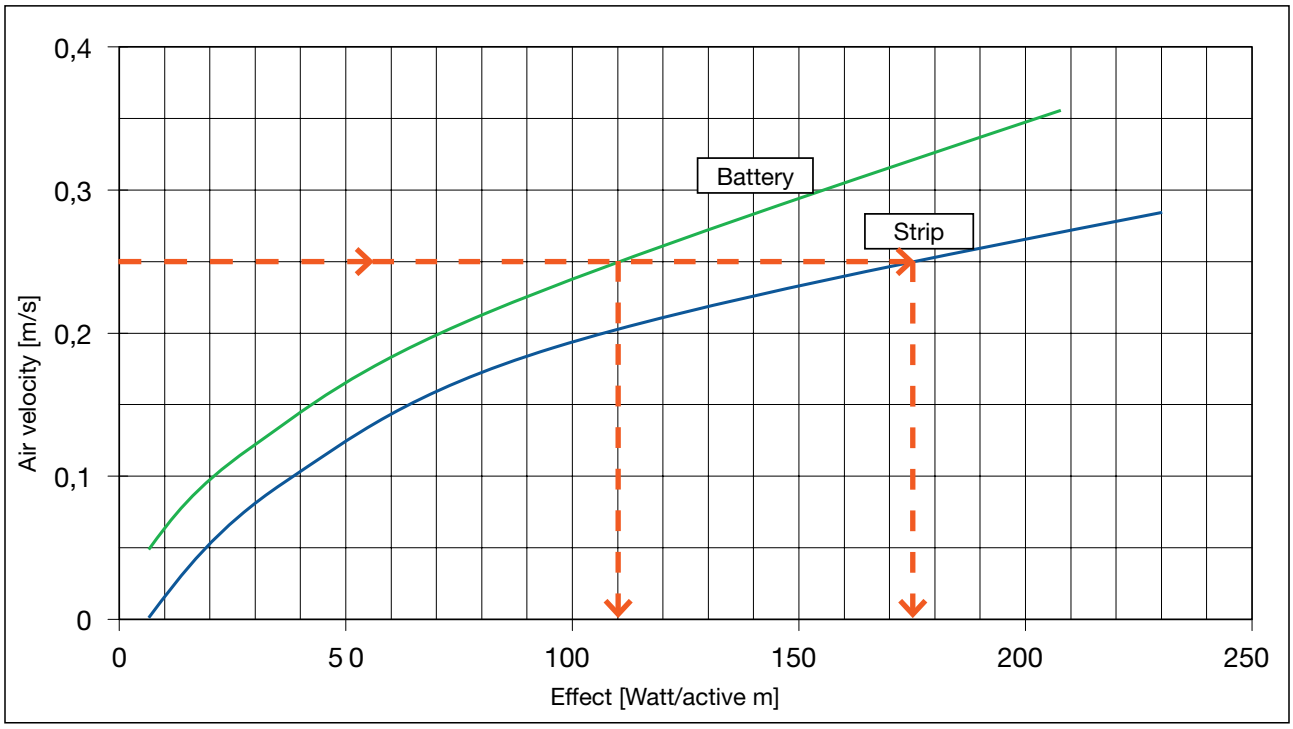

Diagram 3. Air velocity / Watt per active metre.

We reserve the right to make changes

Chilled ceiling guide, natural convection

Measurements & calculations

Effect per active metre at different air velocities for strip and battery beam

A large number of measurements were conducted to create diagram 3. Figure 1 shows two examples from this measurement series, with an effect of 150 W/m, where it is apparent that the air velocities are acceptable for a strip beam but are too high for a battery beam. The examples show how the low static pressure of the air jet causes the air jet underneath the beam to compress to a narrower shape.

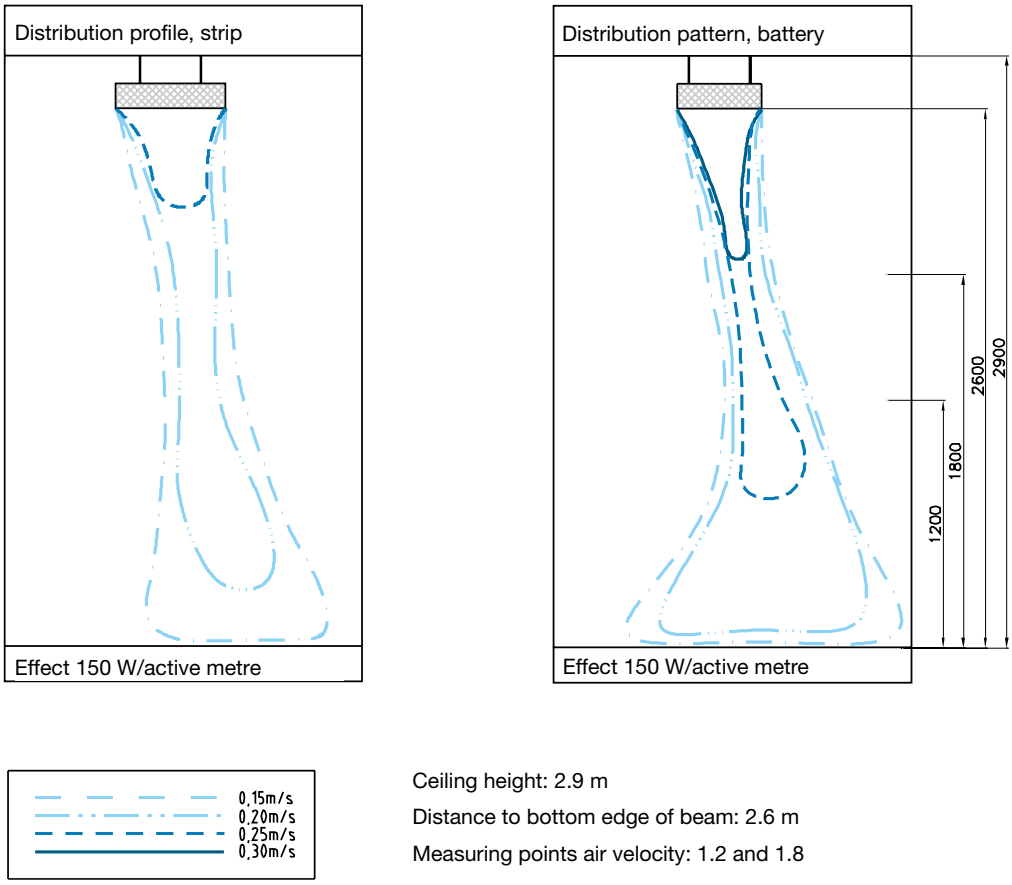

Ceiling height: 2.9 m

Distance to bottom edge of beam: 2.6 m

Measuring points air velocity: 1.2 and 1.8

Figure 1. Air velocity for strip and battery beams.

Chilled ceiling guide, natural convection

1
2
3
4
5
6
7
8
9
10
11
12
13
14
15
16
17
18
19

Measurements & calculations

Effect per active metre at different air velocities for strip and battery beams

Figure 2 shows air velocities with an effect of 110 W/m in a battery beam, in part, across the beam and, in part alongside the beam. The corresponding effect for a strip beam is 175 W/m with the same air velocity profile.

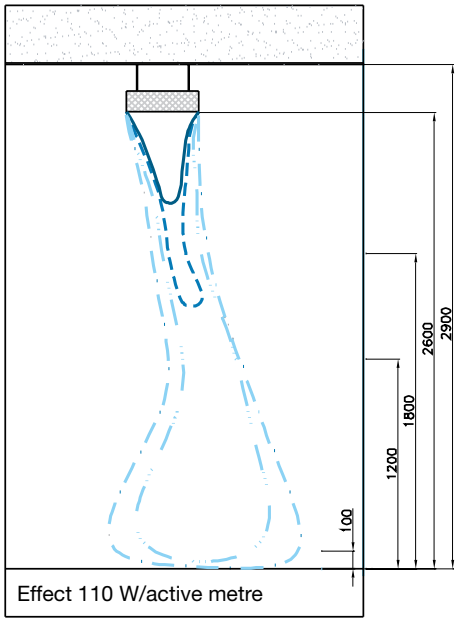

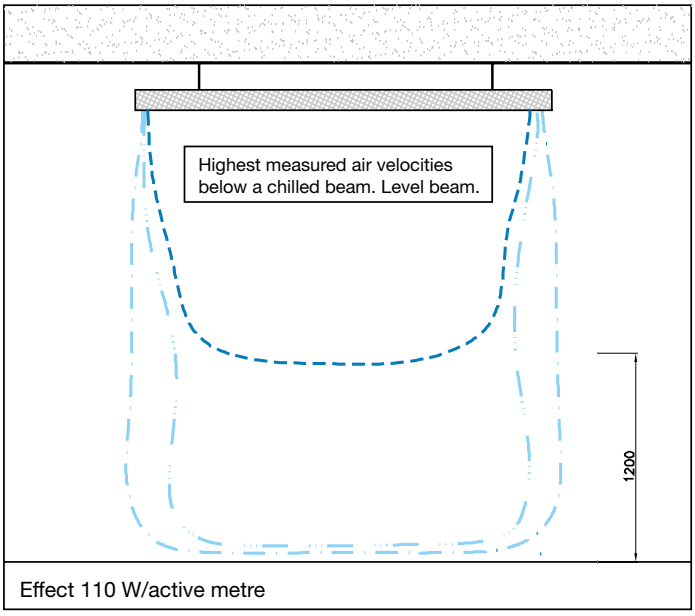

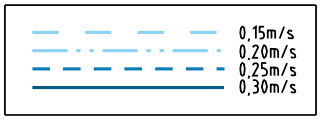

Ceiling height: 2.9 m

Distance to bottom edge of beam: 2.6 m

Measuring points, air velocity: 0.1, 1.2 and 1.8

Figure 2. Air velocity for battery beams.

We reserve the right to make changes

Chilled ceiling guide, natural convection

Influence of beam width on air velocity

To assess if a wide beam generates lower air velocities than a narrower one, measurements were taken for beams with different widths. Diagram 4 shows that the width is only of marginal importance for the air velocities. If the width of a battery beam is doubled from 42 cm to 84 cm, the air velocity is reduced by only 10%. The reason for this is that the air jet is compressed below the beam and is given a similar shape and velocity, regardless of whether the beam is wide or narrow. The same applies to strip beams.

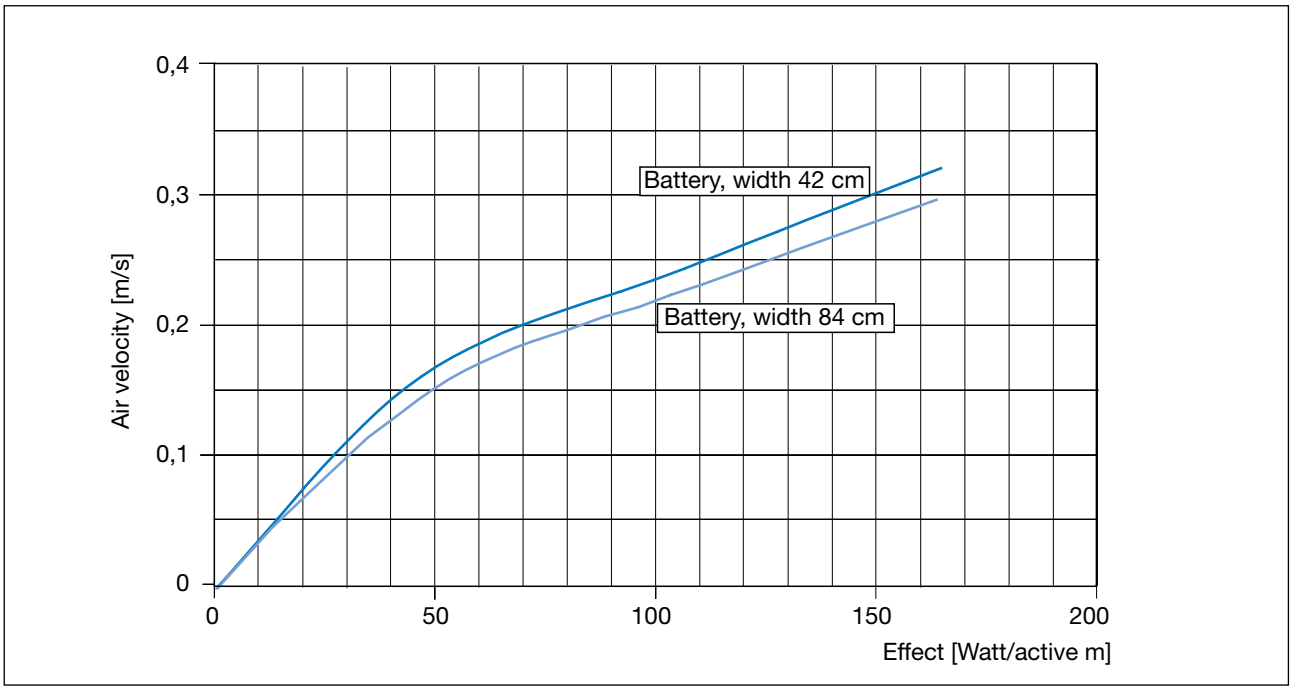

Diagram 4. Air velocity with different beam widths.

Chilled ceiling guide, natural convection

1
2
3
4
5
6
7
8
9
10
11
12
13
14
15
16
17
18
19

Measurements & calculations

Air velocity in the occupied zone depending on ceiling height

Figure 3 shows the air velocity in a room with a battery beam placed at different heights. The figures show clearly that air velocities are not affected appreciably, whether the room is high or low, at least within the range of 2.6 to 3.0 m above floor level. A marginal reduction in air velocity can be observed if the ceiling becomes higher. Lower velocities can be assumed in the occupied zone first when the ceiling height is well over 3.0 m.

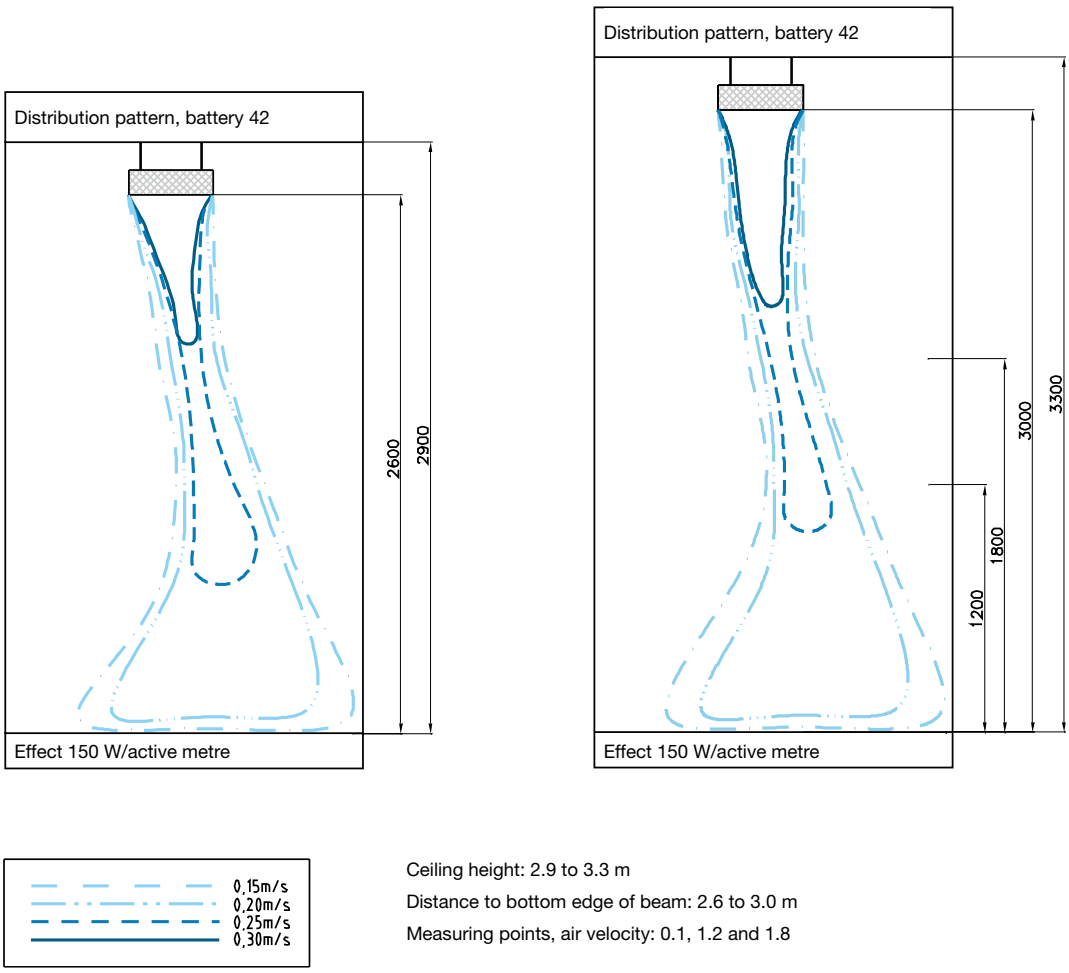

Ceiling height: 2.9 to 3.3 m
Distance to bottom edge of beam: 2.6 to 3.0 m
Measuring points, air velocity: 0.1, 1.2 and 1.8

Figure 3. Air velocity at different ceiling heights.

We reserve the right to make changes

Chilled ceiling guide, natural convection

Measurements & calculations

Air velocity when beams are installed next to one another

Figure 4 shows what happens when chilled beams are installed next to one another. The selected effect was 110 W/m per metre of battery beam, i.e. the power considered to be the maximum acceptable for a single battery beam. If a strip beam is used instead, the corresponding power can be set to 175 W/active metre. The beam in the examples is 42 cm wide. With two beams next to each other, 800 mm centre to centre, an air velocity in the room equal to a single beam is achieved. However, the air streams underneath the beams are still affected by each other. The figures show how the air streams are drawn towards each other due to the low static pressure in the air column, which tends to draw the room air towards itself. As air cannot rise between the beams in sufficient volumes, the air streams underneath the beams are drawn together. It is first, at a distance of 1.2 m between the centres of the beams, they function properly as two separate beams from the point of view of the aerodynamics.

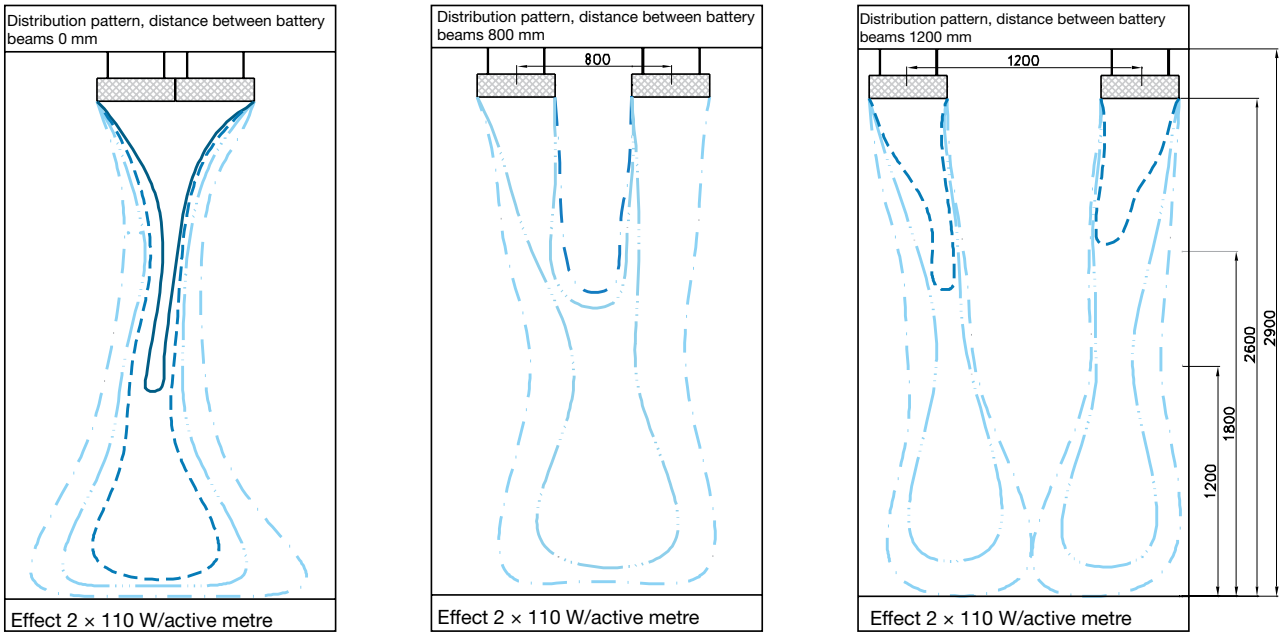

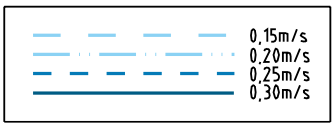

Ceiling height: 2.9 m

Distance to bottom edge of beam: 2.6 m

Measuring points, air velocity: 0.1, 1.2 and 1.8

Figure 4. Air velocity with different distances between two beams

Chilled ceiling guide, natural convection

1
2
3
4
5
6
7
8
9
10
11
12
13
14
15
16
17
18
19

Measurements & calculations

Air velocity when beams are installed next to one another

Diagram 5 shows the mean air velocity of 1.6 m above floor level as a function of different c-c (centre to centre) beam dimensions. It shows that a c-c distance of 800 mm, and greater, generates more or less the same air velocity as with a single beam. There is a certain minimum level at a c-c distance of 800 mm, since at this distance, the lateral movement of air is at its maximum, and it decreases somewhat the air velocity.

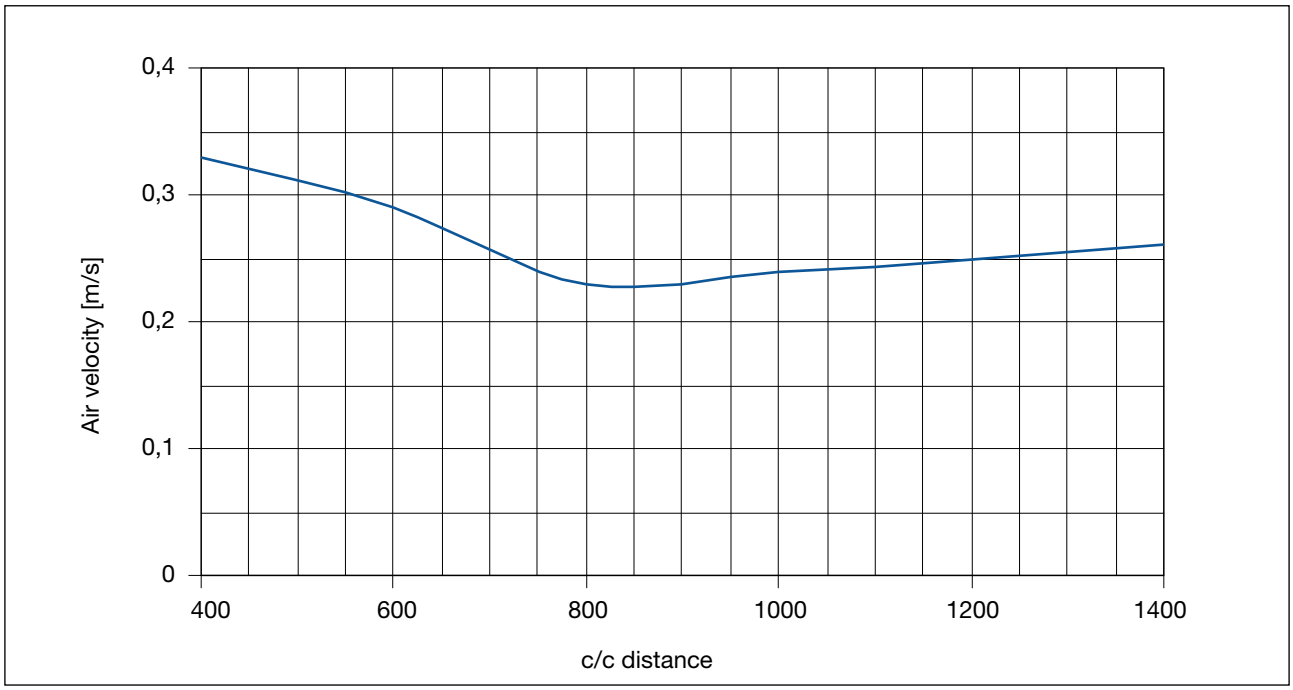

Diagram 5. Air velocity at different c-c distances between two beams. Battery beam: 110 W/m. Strip beam: 175 W/m.

We reserve the right to make changes

Chilled ceiling guide, natural convection

Figure 5 shows what happens when a third chilled beam is installed next to the two previous ones at the minimum acceptable centre-to-centre distance of 800 mm. All air streams affect each other, but air velocities are only negligibly higher than for a single beam.

Hence, the recommendation for installing many beams next to each other is that the effect should not exceed 110 W/m and the centre-to centre distance between the beams should be greater than 800 mm. The same applies to strip beams, but the effect can be increased to 175 W/m there.

Air velocity when beam is installed near wall

Figure 6 shows what happens when a chilled beam is installed closed to a wall. The different pressures that arise because of the air velocities cause the air stream to be sucked in towards the wall, the so-called Coanda effect. This is because the distance becomes so small that air cannot pass between the chilled beam and the wall in sufficient quantities. The phenomenon occurs at a distance of approx. 400 mm between the side edge of the beam and the wall. The width of the beam, in this case, is 420 mm. It is also clear that air velocities tend to increase when the beam is placed immediately next to the wall.

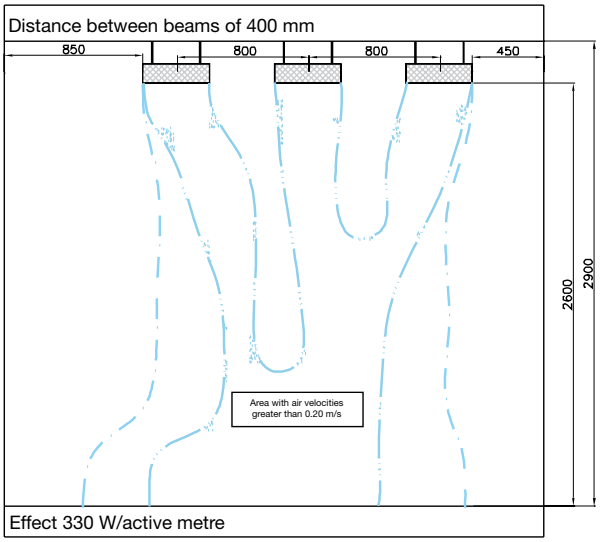

Figure 5. Air velocity with three beams.

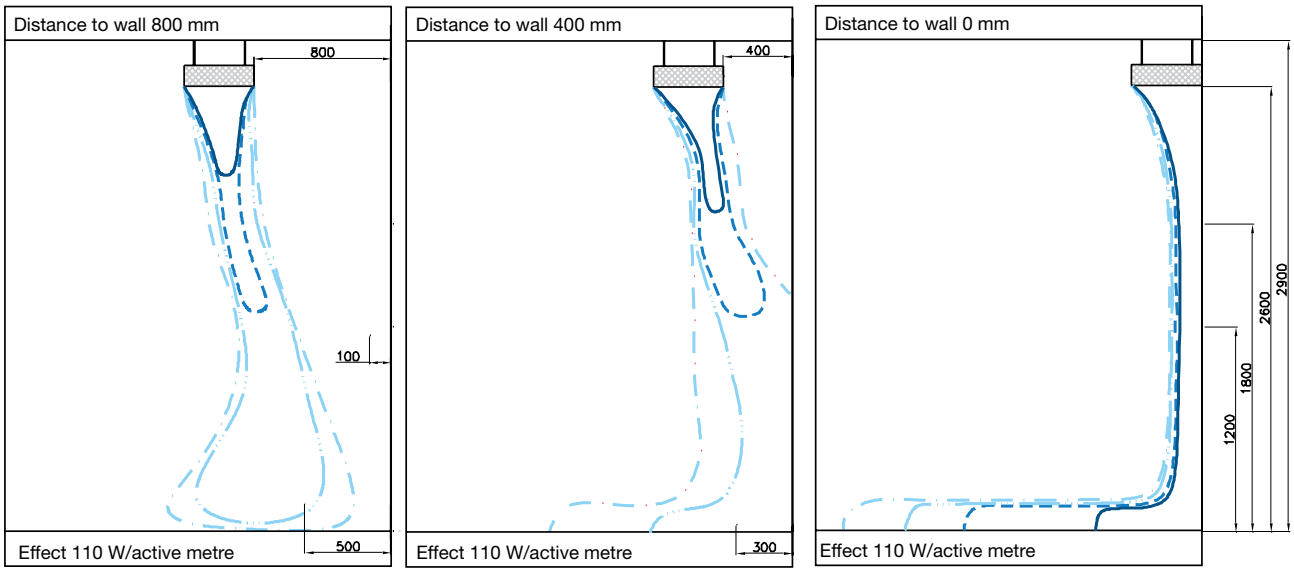

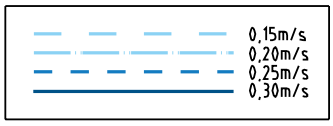

Ceiling height: 2.9 m

Distance to bottom edge of beam: 2.6 m

Measuring points, air velocity: 0.1, 1.2 and 1.8

Figure 6. Air velocity when placing a beam next to wall.

Chilled ceiling guide, natural convection

1
2
3
4
5
6
7
8
9
10
11
12
13
14
15
16
17
18
19

Measurements & calculations

Influence of beam inclination on the air velocity

Figure 7 shows that the air velocities increase somewhat if a chilled beam is tilted lengthwise. The increase is noticeable first at an inclination of 20°C. At an inclination of 30°C, the air velocities are significantly higher and are displaced towards the lower part of the chilled beam.

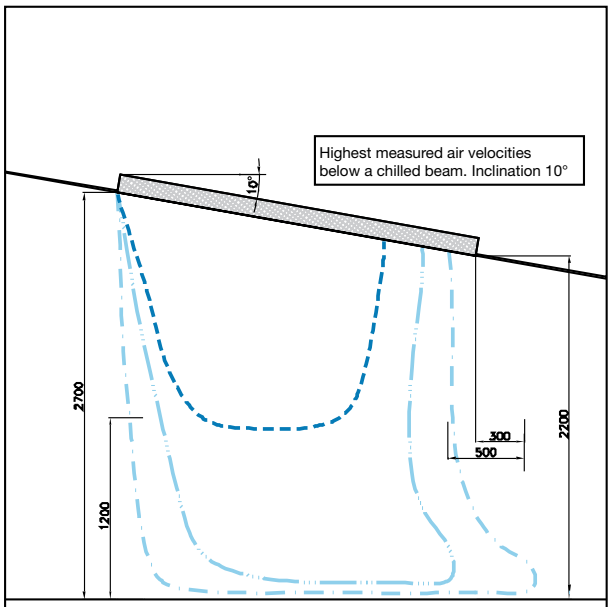

Effect 110 W/active metre

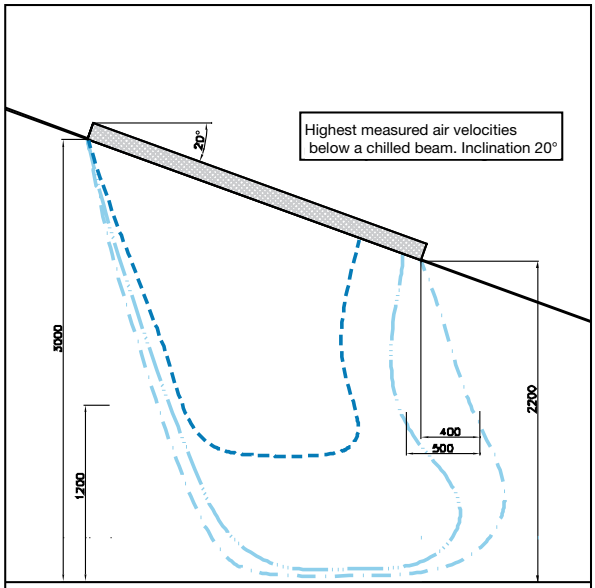

Effect 110 W/active metre

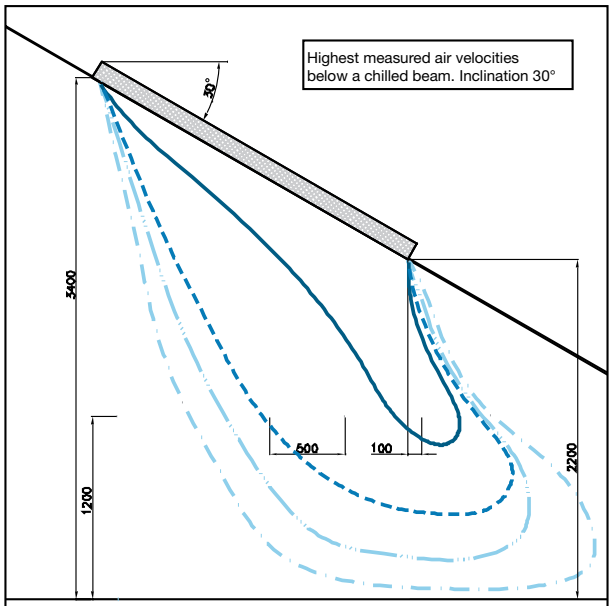

Effect 110 W/active metre

Figure 7. Air velocity at different inclinations.

We reserve the right to make changes

Chilled ceiling guide, natural convection

Turbulence intensity in the air jet below a natural convection beam

The turbulence intensity in the air jet underneath a natural convection beam does not differ, whether it is a strip beam or a battery beam. However, the turbulence intensity depends on the velocity of the air jet. The turbulence intensity can be read off from the diagram below, as a function of different velocities. Should conditions at critical velocities be studied (approx. 0.25 m/s), the turbulence intensity is approx. 15%.

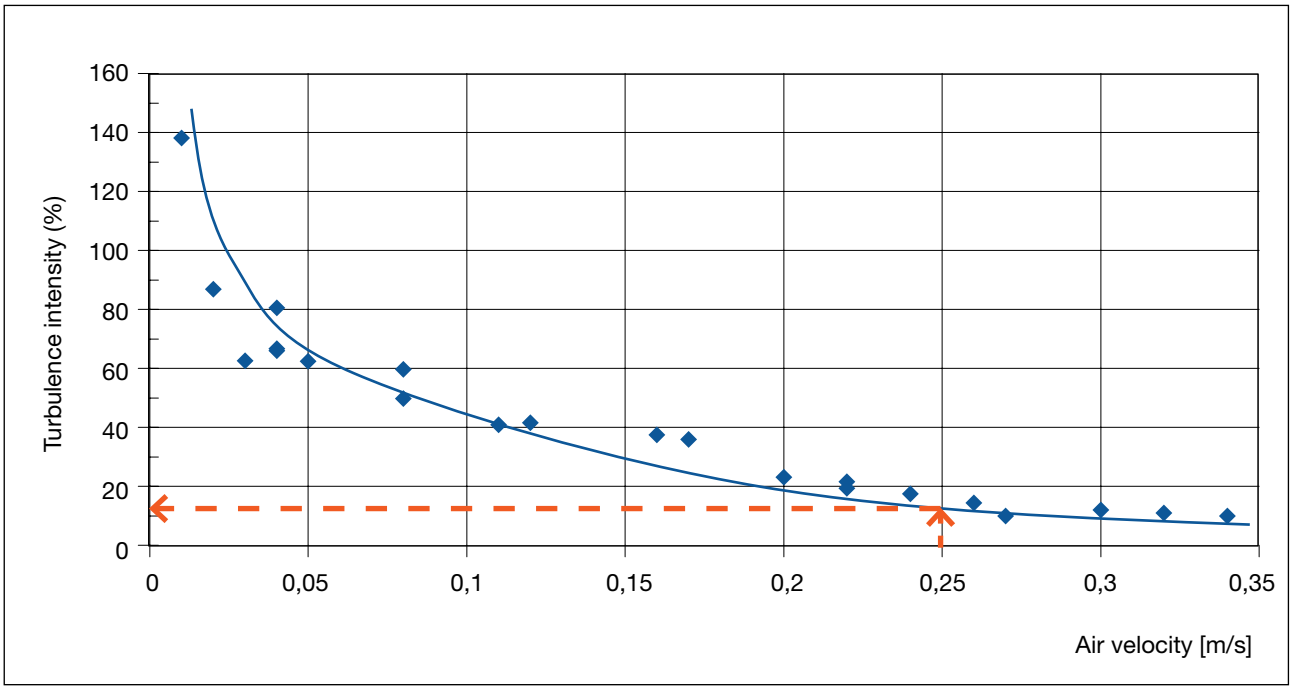

Diagram 6. Turbulence intensity, battery 42. Effect of 100 to 150 W/active metre

Chilled ceiling guide, natural convection

1
2
3
4
5
6
7
8
9
10
11
12
13
14
15
16
17
18
19

Measurements & calculations

Actual case

Natural convection products are to be installed in an office with a ceiling height of 2.9 m and distance to the bottom edge of the beam of 2.6 m. The temperature requirement is a maximum of 25° C in the room, and the experience of the climate must be kept within the DIN standard for temperature, air velocity and turbulence intensity. The cooling effect provided by the product must be 500 W in total.

Check that the air velocity does not create a draught, when you select the natural convection products that meet the specified requirements.

Solution
Step 1: Use the DIN diagram, diagram 1, with 25° C and assume 15% turbulence intensity. This gives an air velocity of 0.25 m/s.

Step 2: Check the assumption in diagram 6. Enter 0.25 m/s and read off 15%. The assumption in this case is OK!

Step 3: Find out the maximum cooling effect for the strip and battery products, respectively. Go to diagram 3. The diagram gives the following values:

Strip product: 175 W/m
Battery product: 110 W/m

Check: Check whether the width of the beam has any effect on the effect in W/active metre of beam on diagram 4. The check gives the result that the width only makes a marginal difference.

Check whether the ceiling height is of any importance for the air velocity and distribution pattern for the actual ceiling height on figure 3. Since the ceiling height is within the range of 2.6 to 3.0 m above floor level, the air velocities become acceptable.

Determine the distance that is required between the two beams, in the case where two products are required, see figure 4. The figure shows that the centre-to-centre distance between the products should be at least 800 mm, for the air velocities and distribution patterns to be OK.

Check in figure 6 what the air velocities will be if the beam is placed next to or adjacent to a wall. With a distance of 400 mm or more between wall and beam, the air will not move along the wall.

Then, following steps 1 through 3, make the following choices: When selecting a strip beam: the product must be at least 500 W/175 W ≈ 2.9 m long.

When selecting a battery product: the product must be at least 500 W/110 W ≈ 4.5 m long.

We reserve the right to make changes

Chilled ceiling guide, natural convection

Summary of the diagrams

Diagrams 1 + 6 indicate the permitted air velocity as a function of room temperature, see diagram 7.

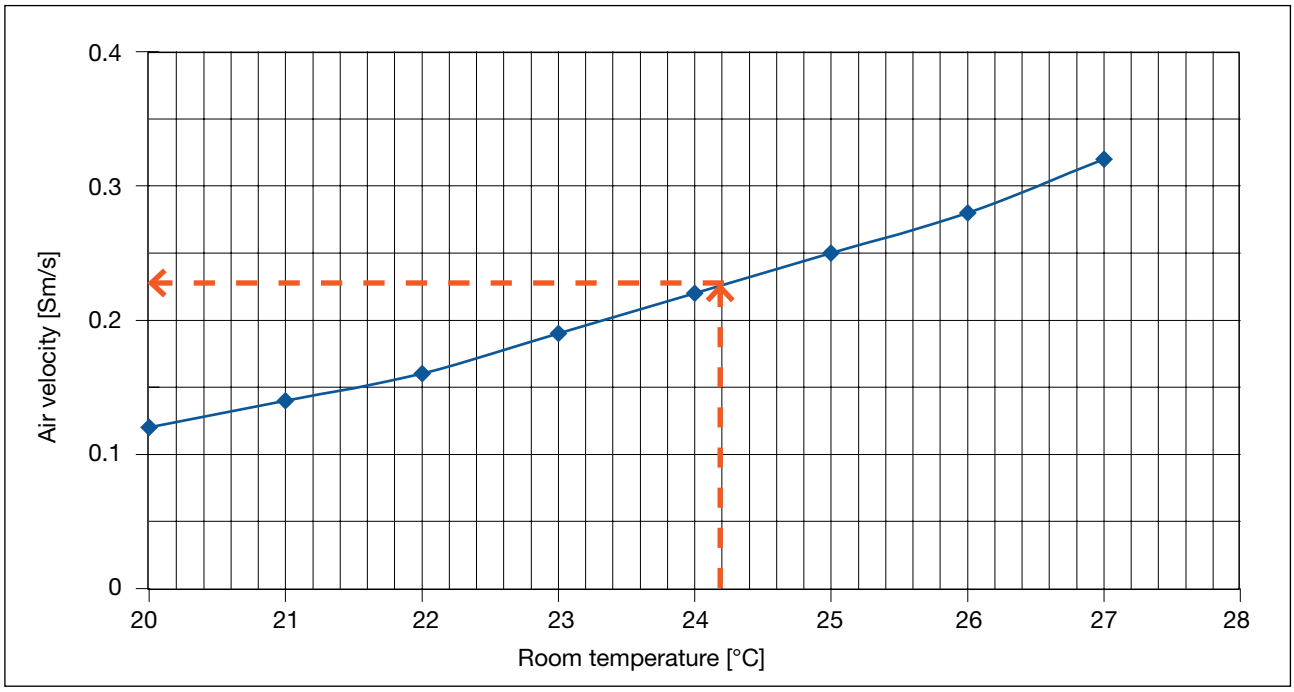

Diagram 7.

Diagrams 1 + 3 + 6 indicate the permitted effect per beam metre as a function of room temperature, see diagram 8.

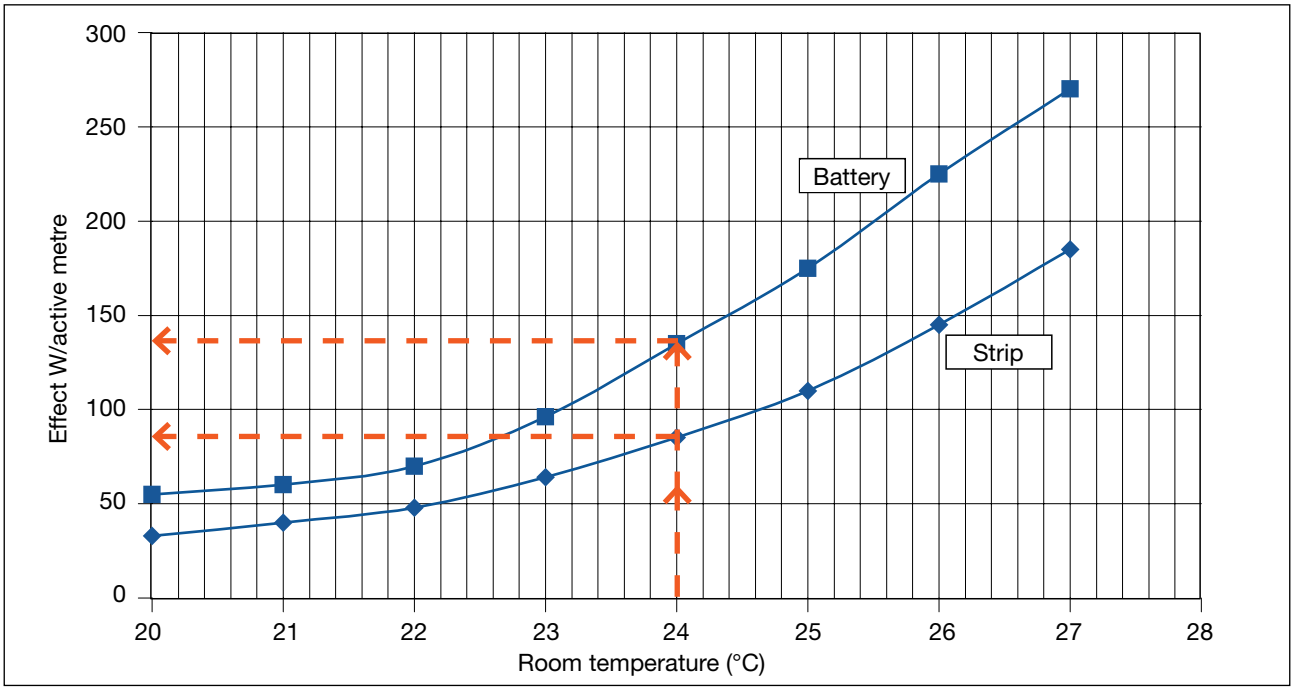

Diagram 8.

Supply air beam

Plexus

Contact, Overview, Index	1
Guideline heating and cooling	2
Plexus	**3**
Professor	4
Pilot	5
Architect	6
Polaris I & S	7
Plafond	8
Podium	9
Celo	10
Cabinett	11
Capella	12
Carat	13
Fasadium	14
Atrium H & C /Loggia	15
Regula	16
Drypac™	17
Lighting	18
TEKNOsim	19

© 02.2010 Lindab Ventilation A/S. All forms of reproduction without written permission are forbidden. Lindab® is the registered trademark of Lindab AB.
Lindab's products, systems, product and product group designations are protected by intellectual property rights (IPR).

Supply air beam Plexus

Use

Lindab's comfort unit Plexus gives many placement possibilities since it fits into the false ceiling 600 x 600 alternative 1200 x 600.

Plexus is provided with fixed lamellas which controls the primary air into non-parallel jets in a 360 degree air pattern. The 360 degree air pattern results in shorter air throws (30%) and a draft free indoor climate. Plexus can be used for both cooling, heating and ventilation. Plexus can be equipped with the functions Drypac™ condensation protection, Regula Secura condensation guard, down fold battery for better accessibility, and pre-mounted valves and actuators. The possibilities are many and the flexibility large.

Installation

Plexus is provided in both an integrated and a free hanging model. Plexus I are mounted integrated into false ceiling there the comfort unit is placed above the standard T-bars. Plexus X is mounted integrated into false ceilings there the comfort unit is placed into hidden bars, for example edge DS. Plexus Y and Z are for mounting into false ceiling system edge E. Plexus F is mounted free hanging or close to the ceiling. Plexus can be delivered with horizontal or vertical air connection and with horizontal water connection.

Worth noting

By the adaption to ceiling tile dimensions the Plexus beam easily can be mounted into modern buildings.

Because of Plexus 360 degree air pattern and the resulting shorter air throws many Plexus beams can be mounted into same room without creating any draft problems.

The air volume can easily be adjusted with Lindab's JetCone system, which creates a great flexibility.

Lindabs active beams and comfort unit Plexus are Eurovent certified and tested according to EN-15116, EN-14518.

Key figures

Length:	600 mm alternative 1200 mm
Width:	600 mm
Height:	220 mm
Capacity:	Cooling effect of up to 1000 W (Plexus 60) Air quantity of up to 52 l/s, 80 pa (Plexus 60) Cooling effect of up to 1500 W (Plexus 120) Air quantity of up to 45 l/s, 80 pa (Plexus 120)

Plexus. 360º - Naturally.

Plexus integrates both cooling and heating functions from the climate beams together with the supply air terminals technique. Unique for the Plexus is that the air is supplied in a 360° air pattern instead of a traditional 4 way pattern. This feature allows approximately 30% shorter air throws.

Supply air beam

Plexus

1
2
3
4
5
6
7
8
9
10
11
12
13
14
15
16
17
18
19

Function

Plexus works by the induction principle. The supply air is let in by induction jet nozzles and then controlled by fixed deflectors into a 360° sunflower shaped pattern.

The heated room air which is inducted through the cooling battery/coil is 4-5 times larger than the supplied primary air. The battery/coil consists of aluminium grills fitted onto cu-tubes where the cooled water runs through and thereby absorbs the rooms heated air, it is then let to a central cooling machine.

Hygiene

Plexus can as an option even be delivered with a partially down fold battery to ease access for cleaning all parts of the unit.

The battery is recessed and access to the whole comfort unit is given. When you open the inspection panel, free access is given to the bigger parts of the product as well as the air duct system.

Cleaning hatch

Plexus comes as standard with an inspection and cleaning hatch, through this you can easily access the unit and ducts.

When the hatch is opened an easy access to the ducts is created.

Construction

Plexus is developed and constructed to reach shortest possible air velocities in the comfort zone.

This is achieved by the fixed deflectors which let the air spread into a 360° around the beam. Plexus is a comfort unit and is very compact in its design but still delivers optimal effects and easy access for cleaning and inspection.

The water pipes are made of copper. The water flowing through the beam should always be free from oxygen to guarantee that corrosion does not occur.

Heating

Plexus can, as an extra option, be equipped with Lindab's patent pending heating solution. By placing the heating coil in the end of the battery, instead of in the middle as normally on chilled beams, even better mixing ventilation is received and the vertical gradient will be distinguishly reduced. By placing the heating coil closest to for example a window, the down draughts will be reduced and the primary cooling source becomes eliminated fast and effective.

Right to alterations reserved

Supply air beam Plexus

Adjustment JetCone

Plexus is delivered as standard with Lindab's JetCone air volume adjustment system. JetCone makes Plexus to a very flexible product with possibility of adjusting air diffusion, air volume and air pressure (without any need of any tools). Adjustment is made by setting the four adjustment regulators into different positions. The adjustment is done without any tools, which makes it very fast and easy to adjust the air diffusion, air volume and air pressure. The fast adjustment system gives an opportunity within planning, since the product choice can be made in an early stage and the products can be drawn into the planning of the project even though the planner do not have all the required data.

To offer the best flexibility concerning the ventilation air volume, Plexus 60 can be ordered in four different types S (standard) and L (low), M (medium) and H (high).

The different types results in that Plexus receives different operating ranges for minimum and maximum air volume. By limiting the operating ranges in different configurations, you can with our JetCone adjustment system easily obtain a very accurate adjustment to requested air volume.

Type S is Lindab's standard type which have a variable air volume capacity which covers the most common demands. In configuration L, M and H we have combined the JetCone system with traditional nozzles to be able to offer three predefined operating ranges. These operating ranges is overlapping each other to be able to give a very accurate regulation. Type L is predefined to the same operating range such as S, while M and H have a operating range which gives higher air volumes. The big advantage is that L, M and H easily can be re-configured and replace each other.

The difference between type L, M, H and type S is that type S can handle a higher nozzle pressure with low sound levels and gives a little bit higher capacities at those operating circumstances. Diagram 2 and 3 shows the capacity for the different types. Diagram 10 and 12 shows the minimum and maximum air volume, and the sound level at the specific operating point.

Plexus 120 is only available in standard type (S).

Example
Today one person is sitting in a cell office. The company is making an expansion and employes one more person, who should be placed in the same room. The air volume then needs to be adjusted to cover the fresh air requirement for two persons instead of one person. The air volume is adjusted by modifying the position of the adjustment point and the requested result is given. If it is requested to direct the air diffusion in a certain way this is also possible to do. With the JetCone adjustment system it is possible to get an asymmetric air pattern. To receive further information about the JetCone adjustment system for Plexus.

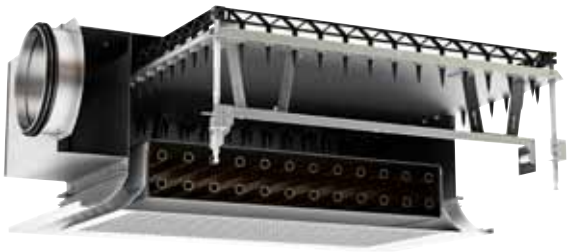

Lindab's JetCone system.

Optimal Diffusion Pattern

As the air is not supplied in parallel rays (stream), but in a sun shaped 360° pattern. The air rays (stream) never collide with the result of longer throws. Plexus has 30% shorter throws than similar products.

The significant shorter throw makes it possible to place the comfort units closer together and thereby it is possible to supply much more cooling effect to the room.

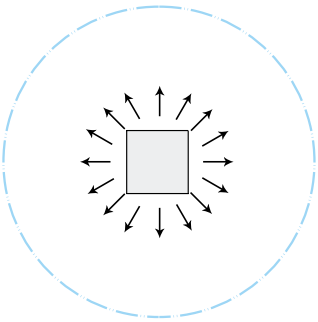

With Plexus you create all conditions for lower air velocities in the occupied zone which result in a climate without draughts in the most natural way.

1 2 3 4 5 6 7 8 9 10 11 12 13 14 15 16 17 18 19

Supply air beam

Plexus

1
2
3
4
5
6
7
8
9
10
11
12
13
14
15
16
17
18
19

Data

Versions

Plexus 60

Plexus 60 is a squared comfort unit, with perforated face plate, and is as standard prepared for ventilation and cooling.

The perforated face plate is fitted in the height of the recessed ceiling, to give an aesthetic and complete integration in the ceiling.

Plexus 60 is delivered preset for a certain flow at a certain pressure, which contributes to a fast and easy start of the ventilation system.

If needed the optimal 360° diffusion pattern can be adjusted.

Plexus 60 is available in four different air volume configurations, S (standard), L (low), M (medium) and H (high). The configuration refers to the opportunity of changing the air volume in the beam, for further information see diagram 9 and 11.

Plexus I have a 594 x 594 mm face plate and fits into the T24/Lay in ceiling systems 600 x 600 mm.

Plexus X have a 599 x 599 mm face plate and fits into i.e. hidden T-bar, clip-in and similar ceiling systems.

Plexus Y have a 575 x 575 mm face plate and fits into the T24 ceiling system edge E.

Plexus Z have a 584 x 584 mm face plate and fits into the T15 ceiling system edge E.

Plexus 120

Plexus 120 is a rectangular comfort unit, with perforated face plate, and is as standard prepared for ventilation and cooling.

The perforated face plate is fitted in the height of the recessed ceiling, to give an aesthetic and complete integration in the ceiling.

Plexus 120 is delivered preset for a certain flow at a certain pressure, which contributes to a fast and easy start of the ventilation system.

If needed the optimal 360° diffusion pattern can be adjusted.

Plexus I have a 1195 x 595 mm face plate and fits into the T24/Lay in ceiling systems 1200 x 600 mm.

Plexus X have a 1199 x 599 mm face plate and fits into f.x. hidden T-bar, clip-in and similar ceiling systems.

Plexus Y have a 1174 X 575 mm face plate and fits into the T24 ceiling system edge E.

Plexus Z have a 1183 x 584 mm face plate and fits into the T15 ceiling system edge E.

Plexus 600 x 600, integration in recessed ceilings.

Plexus 1200 x 600, integration in recessed ceilings.

Right to alterations reserved

Supply air beam

Plexus

Plexus F

Plexus F could either be a squared (F 60) or rectangular (F 120) comfort unit, with perforated face plate, and is as standard prepared for ventilation and cooling.

Plexus F are free hanging units with a face plate like the other models.

Plexus F are delivered preset for a certain flow at a certain pressure, which contributes to a fast and easy start of the ventilation system.

If needed the optimal 360° diffusion pattern can be adjusted.

Plexus F 60 is available in four different air volume configurations, S (standard), L (low), M (medium) and H (high). The configuration refers to the opportunity of changing the air volume in the beam, for further information see diagram 10 and 12.

Plexus F 60

Supply air beam

Plexus

Plus features

Factory pre-installed.

Heating: The product can be equipped with a water circuit in the battery to provide a heating function.

Drypac™: The batteries can be equipped with an anti-condensation surface layer, which ensures increased protection against condensation or increased power output (refer to chapter Drypac™).

Integrated valve and actuator: A control valve, with variable Kv value, and an actuator can be pre-installed in the product.

Integrated control centre: It is possible to have Lindab's room control centre Regula pre-installed in the product. The control panel is fully accessible from below. Refer to the chapter Regula.

Regula Secura: Lindab's Regula Secura condensation guard can be installed in the product as an option.

Regula Connect: The product can be equipped with the Regula Connect connection card (refer to chapter Regula). When using Regula Connect, the Connection Card ensures fast and easy wiring between the units actuators.

Adaptation for suspended ceilings: The product can be adapted to most types of suspended ceilings offered on the market.

Special size: Plexus is also available for ceiling type 625 x 625 (62), 675 x 675 (67) and 2' x 2' (U) with model name i. e. Plexus IS 62 and Plexus IS 67.

Down fold battery: Requires connection with flex hose. Battery runs down about 20 cm at the other end.

Special model: Plexus can also be delivered for ventilation only (without cooling battery).

Accessories

Delivered separately.

Control: Refer to the chapter Regula.

Right to alterations reserved

Supply air beam Plexus

Dimensioning, effect

Dimensioning the capacity

1. Start by calculating the effect required for the room, to keep a certain temperature. Lindab's TEKNOsim is an excellent tool for this
2. Calculate which cooling effect, or read in diagram 1, that is supplied by the ventilation air
3. Remaining cooling effect needs to be cooled by the water circuit in Plexus

The effect supplied by the water circuit can be seen in diagrams 2, 3 and 4 by doing the following steps

1. Find the calculated air volume on the x-axis follow its line to actual static pressure
2. At the y-axis you can read the effect per degree under temperature (Avg. water temp minus roomtemp).

Example:

How much effect can a Plexus IS 60 supply with an air volume of 20 l/s and a static pressure of 60 Pa?

The temperature difference between room and average water temperature is 10 °C, and the temperature difference between room and supply air is 6 °C.

In diagram 2 you can read 48 W/C. 10 °C Δt gives a cooling effect of 10 x 47 = 480 W from the water circuit. The total effect from the unit is found by adding the cooling effect for the ventilation air from diagram 1, 20 l/s x 1,2 x 6°C =144 W

Total of 144 W + 480 W= 624 W

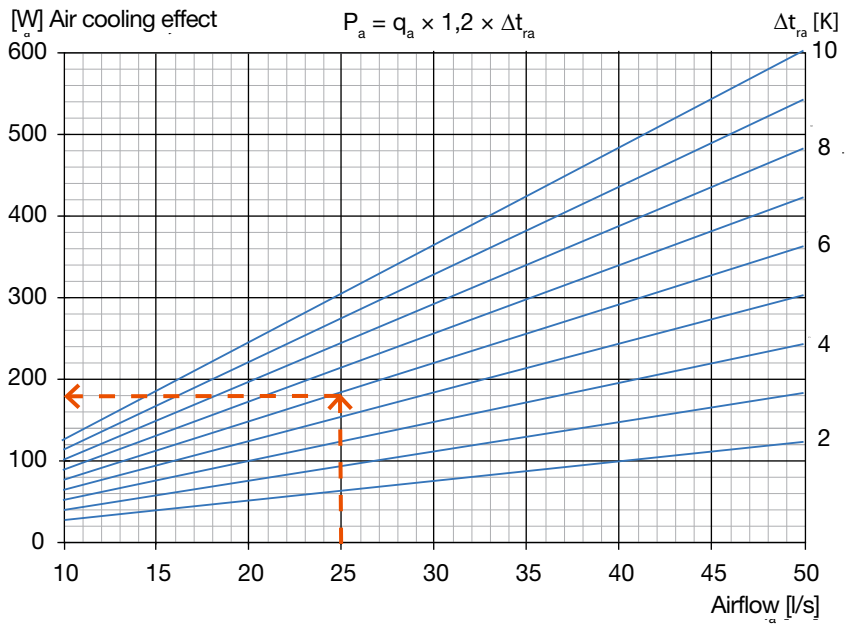

Diagram 1. Effect / airflow cooling effect in supply air (W)

Supply air beam Plexus

Diagram effect

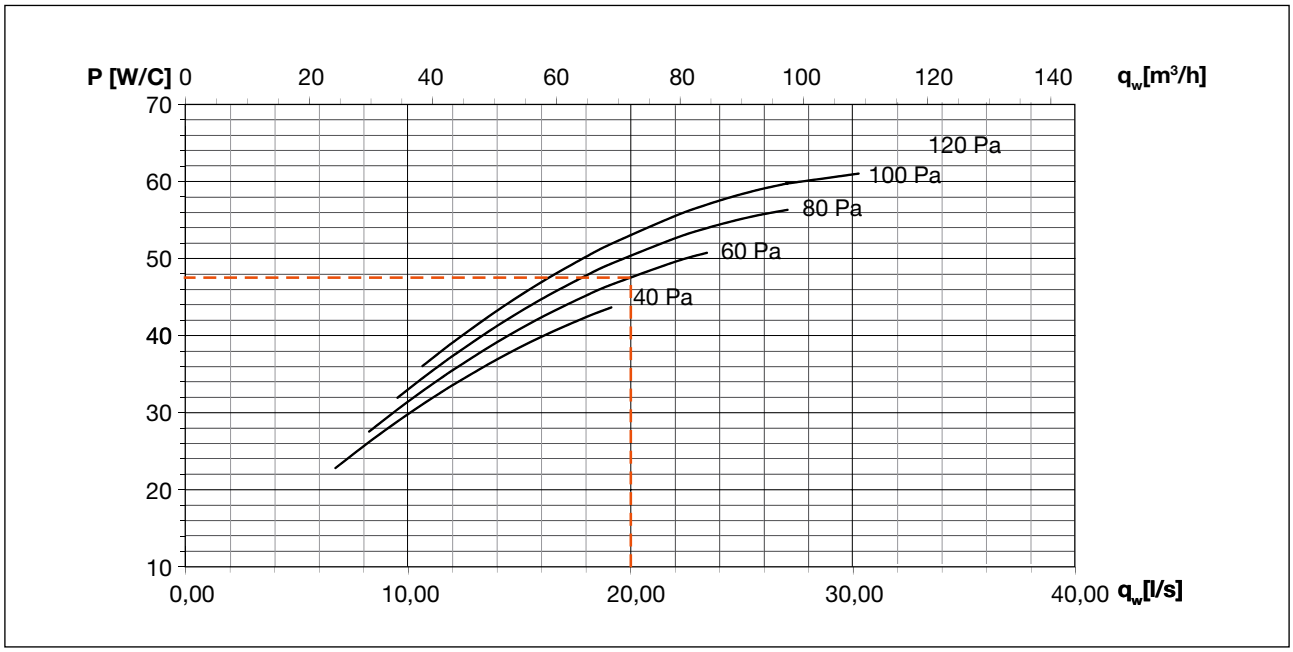

Diagram 2. Plexus 60 all models configuration S. Cooling capacity is reduced with 6% when using battery with both cooling and heating.

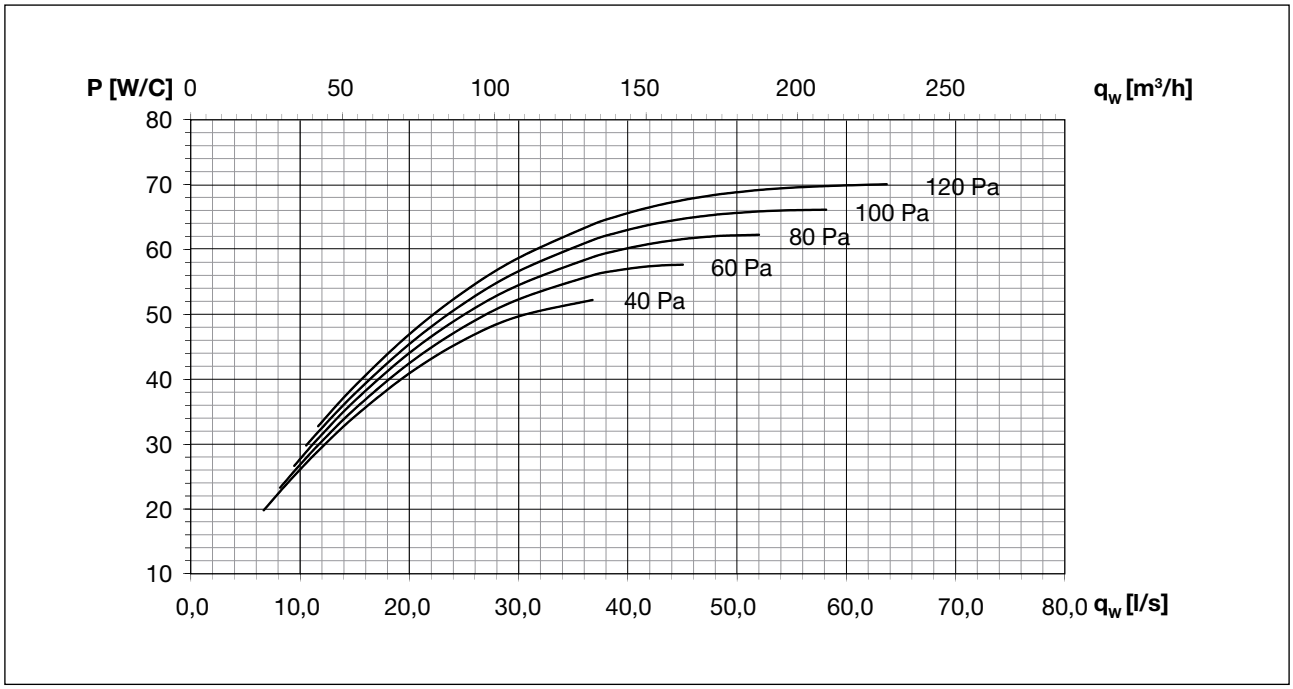

Diagram 3. Plexus 60 all models configuration L/M/H. Cooling capacity is reduced with 6% when using battery with both cooling and heating.

Right to alterations reserved

Supply air beam Plexus

Diagram effect

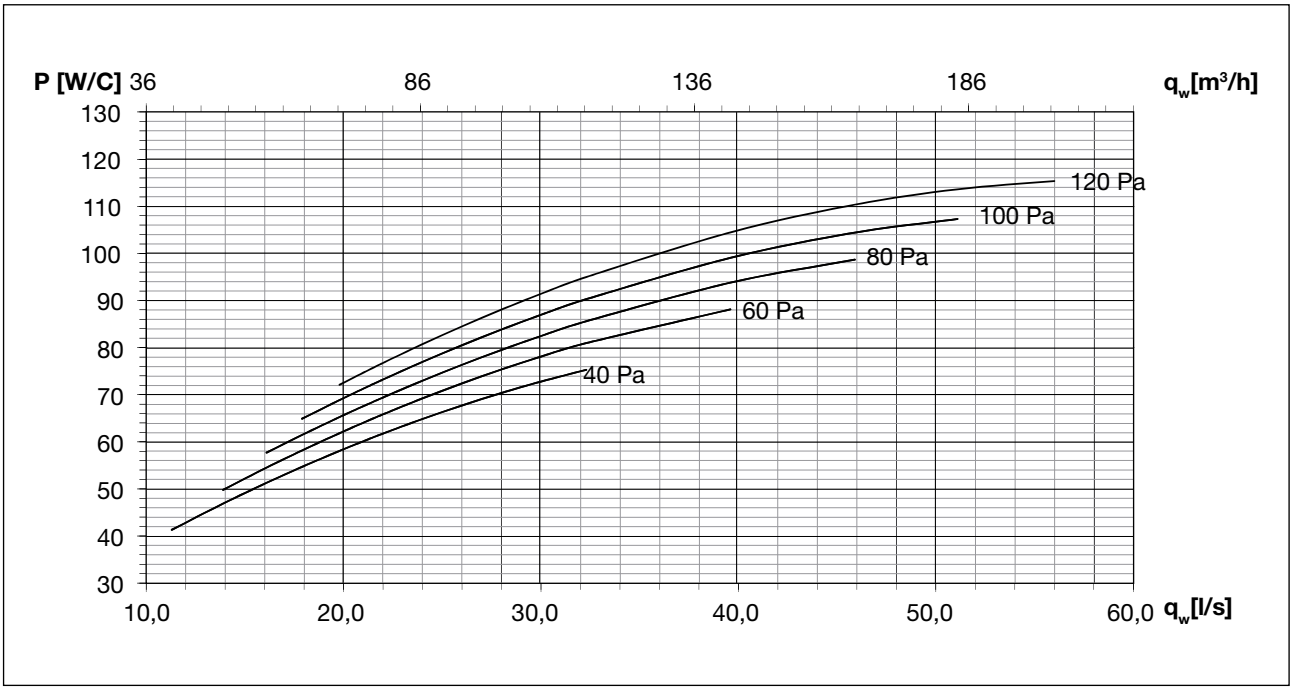

Diagram 4. Plexus 120 all models configuration S. Cooling capacity is reduced with 6% when using battery with both cooling and heating.

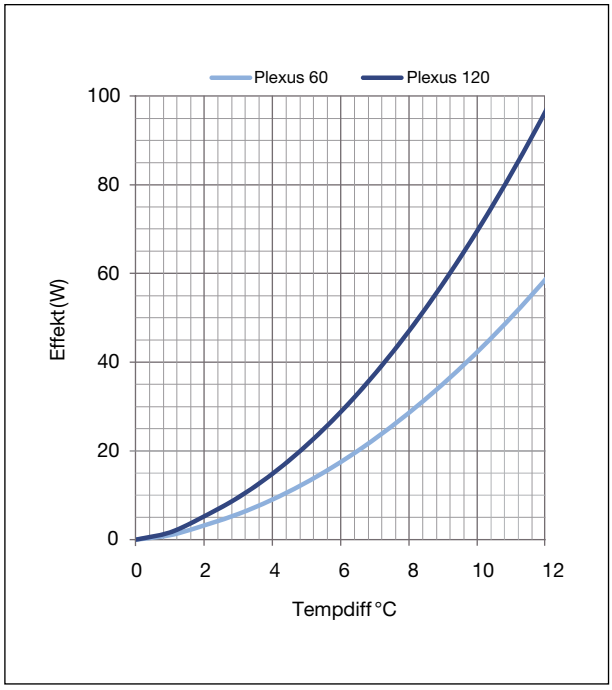

Diagram 5. Plexus natural convection capacity cooling at nominal water flow 0,038l/s

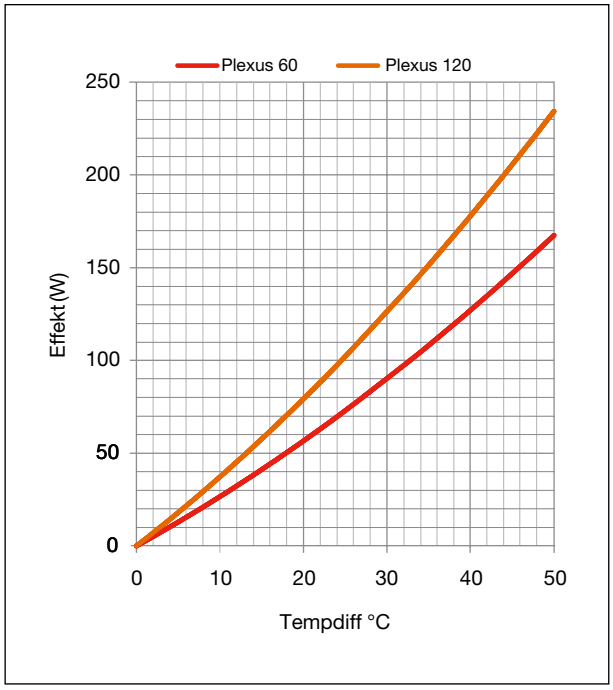

Diagram 6. Plexus natural convection capacity heating at nominal water flow 0,019l/s

Supply air beam Plexus

Adjustment factor, effect from water flow

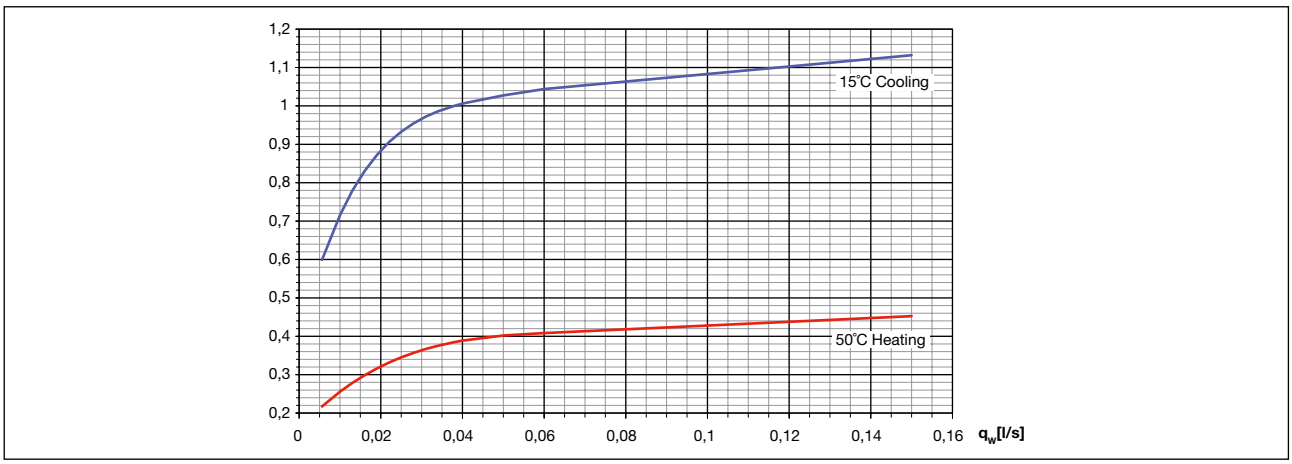

Diagram 7.

From calculated water flow, the adjustment factor is set for the capacity output. This calculation is repeated onto previously calculated effect virtually matches the new value. Adjusted effect is easily calculated with Lindab´s Calculation tool.

In example at cooling and a water flow at 0,038 l/s you can read out of the diagram that the adjustment factor is 1, and no further calculation is needed. If the adjustment factor is below 1, adjustment is needed. F.x. If the water flow had been 0,06 l/s the adjustment factor is 1,05 and therefore the effect 480 (W) x 1,05 = 504 W. New flow is calculated and new adjustment factor is read. The calculation is repeated until calculated effect virtually matches. See example below.

Example Heating:

1. Effect 1150 / (4200 x 5) = 0,55 l/s. The adjustment factor read to 0,41. Reached effect: 1150 W x 0,41 = 472 W
2. New flow is calculated: 472/ (4200 x 5) = 0,022 l/s. New adjustment factor read to 0,35.
   Reached effect: 0,35 x 1150 = 403 W
3. New flow is calculated: 403 W/ (4200 x 5) = 0,019 l/s. New adjustment factor read to 0,33
   Reached effect: 0,33 x 1150 = 380 W ≈ 403 W

Pressure drop in water circuit, cooling & heating

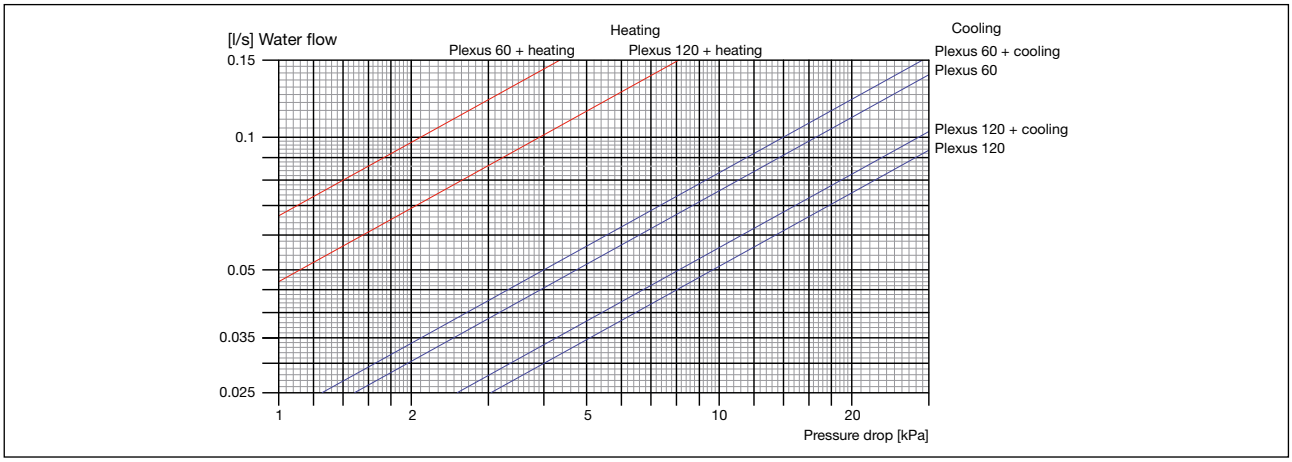

Diagram 8.

Water flow, cooling/heating

Capacity (W) / (4200 x Δ) = water flow Δ = Temp. diff. water flow – water return Minimum flow = 0,025 l/s

Example cooling:

Plexus IS 60 with cooling capacity 500 W and Δt 3° C (f. ex. +14/+17° C) results in flow 0,04 l/s * and from the diagram 7 you can read the pressure drop, 3,2 kPa.

* 500 / (4200 x 3) = 0,04 In this situation the effect factor is approx. 1 and no correction has to be made.

Example heating:

Plexus IS 60 with heating capacity 250 W and Δt 5° C (f. ex. +45/+50° C) results in flow 0,012l/s *, this flow is outside the diagram but the pressure drop can be approximated to < 0,1 kPa.

* 250/(4200 x 5) = 0,012

Right to alterations reserved

Supply air beam Plexus

Cooling effect, Plexus

Nozzle pressure 60 Pa			Water															Air		
q_A (m³/h)	q_A (l/s)	Plexus	Δt_{rw} = 7 K			Δt_{rw} = 8 K			Δt_{rw} = 9 K			Δt_{rw} = 10 K			Δt_{rw} = 11 K			Total pressure duct	Noise press level	Noise effect level
			P(W)	q(l/s)	p(kPa)	P(W)	q(l/s)	p(kPa)	P(W)	q(l/s)	p(kPa)	P(W)	q(l/s)	p(kPa)	P(W)	q(l/s)	p(kPa)	Pa	dB(A)	dB(A)
36	10	Plexus-IL 60	114	0,009	0,23	137	0,011	0,32	162	0,013	0,43	190	0,015	0,57	221	0,018	0,74	61	<20	<24
		Plexus-IS 60	143	0,011	0,34	174	0,014	0,49	208	0,017	0,67	247	0,020	0,91	290	0,023	1,20	61	<20	<24
54	15	Plexus-IL 60	169	0,013	0,46	207	0,016	0,66	251	0,020	0,93	299	0,024	1,27	349	0,028	1,68	61	18	22
		Plexus-IS 60	211	0,017	0,69	263	0,021	1,01	320	0,025	1,43	379	0,030	1,93	437	0,035	2,49	62	<20	<24
		Plexus-IS 120	318	0,025	2,92	394	0,031	4,25	467	0,037	5,73	535	0,043	7,26	597	0,048	8,80	62	<20	<24
72	20	Plexus-IL 60	224	0,018	0,76	279	0,022	1,13	339	0,027	1,59	400	0,032	2,13	460	0,037	2,72	62	21	25
		Plexus-IM 60	224	0,018	0,76	279	0,022	1,13	339	0,027	1,59	400	0,032	2,13	460	0,037	2,72	62	27	31
		Plexus-IS 60	271	0,022	1,07	339	0,027	1,58	407	0,032	2,20	474	0,038	2,87	535	0,043	3,56	64	21	25
		Plexus-IS 120	418	0,033	4,71	503	0,040	6,51	579	0,046	8,34	650	0,052	10,21	717	0,057	12,10	64	17	21
90	25	Plexus-IM 60	275	0,022	1,09	342	0,027	1,62	412	0,033	2,24	478	0,038	2,92	540	0,043	3,61	63	27	31
		Plexus-IS 120	499	0,040	6,43	586	0,047	8,51	666	0,053	10,64	741	0,059	12,83	817	0,065	15,19	66	20	24
108	30	Plexus-IM 60	315	0,025	1,40	391	0,031	2,04	464	0,037	2,77	532	0,042	3,52	594	0,047	4,28	65	28	32
		Plexus-IH 60	315	0,025	1,40	391	0,031	2,04	464	0,037	2,77	532	0,042	3,52	594	0,047	4,28	65	31	35
		Plexus-IS 120	562	0,045	7,90	651	0,052	10,24	734	0,058	12,62	817	0,065	15,22	900	0,072	18,03	68	23	27
126	35	Plexus-IH 60	344	0,027	1,63	423	0,034	2,35	498	0,040	3,13	566	0,045	3,93	631	0,050	4,76	67	31	35
		Plexus-IS 120	609	0,048	9,10	701	0,056	11,63	790	0,063	14,34	879	0,070	17,28	968	0,077	20,47	71	26	30
144	40	Plexus-IH 60	359	0,029	1,76	440	0,035	2,52	515	0,041	3,33	584	0,047	4,16	649	0,052	5,00	69	32	36

Table 1. Flow-adjusted effect table. Cooling circuit Δt_w = 3° C (Water in-out). Cooling capacity is reduced with 6% when using battery with both cooling and heating.
For the red values, the flow is below the recommended minimum flow of 0.025 l/s at Δt_w = 3° C. Increase the flow to the recommended minimum flow.

Nozzle pressure 80 Pa			Water															Air		
q_A (m³/h)	q_A (l/s)	Plexus	Δt_{rw} = 7 K			Δt_{rw} = 8 K			Δt_{rw} = 9 K			Δt_{rw} = 10 K			Δt_{rw} = 11 K			Total pressure duct	Noise press level	Noise effect level
			P(W)	q(l/s)	p(kPa)	P(W)	q(l/s)	p(kPa)	P(W)	q(l/s)	p(kPa)	P(W)	q(l/s)	p(kPa)	P(W)	q(l/s)	p(kPa)	Pa	dB(A)	dB(A)
36	10	Plexus-IL 60	119	0,009	0,25	143	0,011	0,35	170	0,014	0,47	200	0,016	0,62	233	0,019	0,82	81	17	21
		Plexus-IS 60	153	0,012	0,39	187	0,015	0,55	225	0,018	0,77	268	0,021	1,05	314	0,025	1,39	81	18	22
54	15	Plexus-IL 60	177	0,014	0,50	218	0,017	0,73	265	0,021	1,03	315	0,024	1,40	368	0,029	1,84	81	22	26
		Plexus-IS 60	230	0,018	0,80	287	0,023	1,18	348	0,028	1,66	410	0,033	2,22	470	0,037	2,83	82	18	22
72	20	Plexus-IL 60	237	0,019	0,84	296	0,024	1,25	359	0,029	1,75	422	0,034	2,34	482	0,038	2,96	82	24	28
		Plexus-IS 60	298	0,024	1,27	371	0,030	1,86	442	0,035	2,54	510	0,041	3,27	572	0,046	4,00	84	23	27
		Plexus-IS 120	452	0,036	5,42	538	0,043	7,34	616	0,049	9,28	688	0,055	11,27	758	0,060	13,35	84	21	25
90	25	Plexus-IL 60	292	0,023	1,22	364	0,029	1,80	435	0,035	2,47	502	0,040	3,18	564	0,045	3,91	83	27	31
		Plexus-IM 60	292	0,023	1,22	364	0,029	1,80	435	0,035	2,47	502	0,040	3,18	564	0,045	3,91	83	32	36
		Plexus-IS 60	345	0,027	1,64	424	0,034	2,36	499	0,040	3,15	568	0,045	3,95	633	0,050	4,79	86	26	30
		Plexus-IS 120	535	0,043	7,27	623	0,050	9,47	705	0,056	11,75	784	0,062	14,17	864	0,069	16,78	86	23	27
108	30	Plexus-IM 60	338	0,027	1,58	416	0,033	2,28	491	0,039	3,06	559	0,045	3,85	622	0,050	4,64	85	32	36
		Plexus-IS 120	599	0,048	8,86	691	0,055	11,34	779	0,062	13,98	867	0,069	16,86	955	0,076	19,97	88	24	28
126	35	Plexus-IH 60	392	0,031	2,05	475	0,038	2,89	552	0,044	3,76	621	0,049	4,63	687	0,055	5,53	89	35	39
		Plexus-IS 120	688	0,055	11,26	788	0,063	14,27	888	0,071	17,59	988	0,079	21,20	1089	0,087	25,11	95	30	34
144	40	Plexus-IH 60	402	0,032	2,15	486	0,039	3,00	562	0,045	3,89	634	0,050	4,80	698	0,056	5,70	94	37	41

Table 2. Flow-adjusted effect table. Cooling circuit Δt = 3° C (Water in-out). Cooling capacity is reduced with 6% when using battery with both cooling and heating.
For the red values, the flow is below the recommended minimum flow of 0.025 l/s at Δt = 3° C. Increase the flow to the recommended minimum flow.

Supply air beam Plexus

1 2 3 4 5 6 7 8 9 10 11 12 13 14 15 16 17 18 19

Cooling effect, Plexus

Nozzle pressure 80 Pa			Water															Air		
q_A (m³/h)	q_A (l/s)	Plexus	Δt_{rw} = 7 K			Δt_{rw} = 8 K			Δt_{rw} = 9 K			Δt_{rw} = 10 K			Δt_{rw} = 11 K			Total pressure duct	Noise press level	Noise effect level
			P(W)	q(l/s)	p(kPa)	P(W)	q(l/s)	p(kPa)	P(W)	q(l/s)	p(kPa)	P(W)	q(l/s)	p(kPa)	P(W)	q(l/s)	p(kPa)	Pa	dB(A)	dB(A)
54	15	Plexus-IL 60	186	0,015	0,55	230	0,018	0,80	279	0,022	1,13	332	0,026	1,53	387	0,031	2,01	101	23	27
		Plexus-IS 60	249	0,020	0,92	311	0,025	1,36	376	0,030	1,91	441	0,035	2,53	502	0,040	3,18	102	23	27
72	20	Plexus-IL 60	251	0,020	0,93	313	0,025	1,38	378	0,030	1,93	443	0,035	2,55	504	0,040	3,20	102	26	30
		Plexus-IS 60	326	0,026	1,48	402	0,032	2,15	476	0,038	2,90	545	0,043	3,67	607	0,048	4,45	104	24	28
		Plexus-IS 120	486	0,039	6,14	573	0,046	8,17	652	0,052	10,26	726	0,058	12,37	800	0,064	14,65	104	24	28
90	25	Plexus-IL 60	311	0,025	1,36	385	0,031	1,99	458	0,036	2,71	526	0,042	3,45	588	0,047	4,21	103	29	33
		Plexus-IM 60	311	0,025	1,36	385	0,031	1,99	458	0,036	2,71	526	0,042	3,45	588	0,047	4,21	103	35	39
		Plexus-IS 60	379	0,030	1,93	461	0,037	2,74	537	0,043	3,58	606	0,048	4,44	671	0,053	5,31	106	28	32
		Plexus-IS 120	570	0,045	8,11	660	0,053	10,47	744	0,059	12,91	828	0,066	15,56	912	0,073	18,43	106	25	29
108	30	Plexus-IL 60	361	0,029	1,77	441	0,035	2,53	517	0,041	3,35	586	0,047	4,18	650	0,052	5,03	105	32	36
		Plexus-IM 60	361	0,029	1,77	441	0,035	2,53	517	0,041	3,35	586	0,047	4,18	650	0,052	5,03	105	35	39
		Plexus-IS 60	404	0,032	2,17	488	0,039	3,03	565	0,045	3,92	636	0,051	4,83	701	0,056	5,74	109	31	35
		Plexus-IS 120	637	0,051	9,86	730	0,058	12,49	823	0,066	15,40	916	0,073	18,57	1009	0,080	21,99	108	27	31
126	35	Plexus-IM 60	398	0,032	2,11	482	0,038	2,96	558	0,044	3,84	628	0,050	4,72	694	0,055	5,63	107	36	40
		Plexus-IS 120	689	0,055	11,29	789	0,063	14,31	889	0,071	17,64	990	0,079	21,27	1091	0,087	25,20	111	29	33
144	40	Plexus-IM 60	424	0,034	2,36	509	0,041	3,26	586	0,047	4,18	658	0,052	5,12	724	0,058	6,08	109	36	40
		Plexus-IH 60	424	0,034	2,36	509	0,041	3,26	586	0,047	4,18	658	0,052	5,12	724	0,058	6,08	109	39	43
		Plexus-IS 120	731	0,058	12,52	837	0,067	15,87	943	0,075	19,56	1050	0,084	23,58	1157	0,092	27,93	115	31	35
180	50	Plexus-IH 60	449	0,036	2,61	535	0,043	3,56	612	0,049	4,52	685	0,055	5,50	754	0,060	6,53	114	39	43
		Plexus-IS 120	785	0,063	14,19	899	0,072	17,98	1013	0,081	22,16	1128	0,090	26,72	1243	0,099	31,65	123	37	41

Table 3. Flow-adjusted effect table. Cooling circuit Δt_w = 3° C (Water in-out). Cooling capacity is reduced with 6% when using battery with both cooling and heating.
For the red values, the flow is below the recommended minimum flow of 0.025 l/s at Δt_w = 3° C. Increase the flow to the recommended minimum flow.

Nozzle pressure 100 Pa			Water															Air		
q_A (m³/h)	q_A (l/s)	Plexus	Δt_{rw} = 7 K			Δt_{rw} = 8 K			Δt_{rw} = 9 K			Δt_{rw} = 10 K			Δt_{rw} = 11 K			Total pressure duct	Noise press level	Noise effect level
			P(W)	q(l/s)	p(kPa)	P(W)	q(l/s)	p(kPa)	P(W)	q(l/s)	p(kPa)	P(W)	q(l/s)	p(kPa)	P(W)	q(l/s)	p(kPa)	Pa	dB(A)	dB(A)
54	15	Plexus-IL 60	195	0,016	0,60	242	0,019	0,87	294	0,023	1,23	349	0,028	1,68	405	0,032	2,18	121	25	29
		Plexus-IS 60	269	0,021	1,06	336	0,027	1,56	405	0,032	2,17	471	0,037	2,84	532	0,042	3,53	122	25	29
72	20	Plexus-IL 60	264	0,021	1,02	330	0,026	1,51	398	0,032	2,11	463	0,037	2,76	525	0,042	3,44	122	29	33
		Plexus-IS 60	354	0,028	1,71	434	0,035	2,46	509	0,041	3,26	578	0,046	4,08	642	0,051	4,92	124	25	29
		Plexus-IS 120	518	0,041	6,86	605	0,048	9,01	686	0,055	11,20	763	0,061	13,51	841	0,067	16,00	124	26	30
90	25	Plexus-IL 60	329	0,026	1,51	406	0,032	2,19	481	0,038	2,95	549	0,044	3,72	611	0,049	4,51	123	30	34
		Plexus-IS 60	412	0,033	2,24	496	0,040	3,12	573	0,046	4,02	644	0,051	4,94	710	0,057	5,87	126	29	33
		Plexus-IS 120	603	0,048	8,94	694	0,055	11,45	783	0,062	14,11	871	0,069	17,01	960	0,076	20,15	126	28	32
108	30	Plexus-IL 60	383	0,031	1,97	466	0,037	2,79	542	0,043	3,64	611	0,049	4,50	676	0,054	5,39	125	33	37
		Plexus-IM 60	383	0,031	1,97	466	0,037	2,79	542	0,043	3,64	611	0,049	4,50	676	0,054	5,39	125	38	42
		Plexus-IS 60	442	0,035	2,54	528	0,042	3,47	605	0,048	4,42	676	0,054	5,39	745	0,059	6,40	129	32	36
		Plexus-IS 120	672	0,053	10,80	769	0,061	13,69	867	0,069	16,88	965	0,077	20,35	1063	0,085	24,10	128	29	33
126	35	Plexus-IM 60	425	0,034	2,37	510	0,041	3,27	587	0,047	4,19	658	0,052	5,13	725	0,058	6,09	127	38	42
		Plexus-IS 120	728	0,058	12,42	833	0,066	15,75	939	0,075	19,41	1046	0,083	23,40	1152	0,092	27,72	131	30	34
144	40	Plexus-IM 60	456	0,036	2,68	542	0,043	3,64	619	0,049	4,61	692	0,055	5,61	762	0,061	6,66	129	39	43
		Plexus-IS 120	774	0,062	13,84	886	0,071	17,54	999	0,080	21,62	1112	0,089	26,07	1225	0,098	30,88	135	32	36
180	50	Plexus-IH 60	494	0,039	3,09	581	0,046	4,12	661	0,053	5,17	735	0,059	6,25	810	0,065	7,41	134	41	45
		Plexus-IS 120	838	0,067	15,89	960	0,076	20,14	1082	0,086	24,83	1204	0,096	29,94	1326	0,106	35,46	143	37	41

Table 4. Flow-adjusted effect table. Cooling circuit Δt_w = 3° C (Water in-out). Cooling capacity is reduced with 6% when using battery with both cooling and heating.
For the red values, the flow is below the recommended minimum flow of 0.025 l/s at Δt_w = 3° C. Increase the flow to the recommended minimum flow.

Right to alterations reserved

Supply air beam Plexus

Heating effect, Plexus

Nozzle pressure 60 Pa			Water															Air		
q_A (m³/h)	q_A (l/s)	Plexus	Δt_{rw} = 20 K			Δt_{rw} = 25 K			Δt_{rw} = 30 K			Δt_{rw} = 35 K			Δt_{rw} = 40 K			Total pressure duct	Noise press level	Noise effect level
			P(W)	q(l/s)	p(kPa)	P(W)	q(l/s)	p(kPa)	P(W)	q(l/s)	p(kPa)	P(W)	q(l/s)	p(kPa)	P(W)	q(l/s)	p(kPa)	Pa	dB(A)	dB(A)
36	10	Plexus-IL 60	144	0,007	0,02	206	0,010	0,03	278	0,013	0,05	354	0,017	0,08	426	0,020	0,12	61	<20	<24
		Plexus-IS 60	187	0,009	0,03	270	0,013	0,05	359	0,017	0,08	443	0,021	0,12	516	0,025	0,16	61	<20	<24
54	15	Plexus-IL 60	225	0,011	0,04	324	0,015	0,07	421	0,020	0,11	505	0,024	0,16	582	0,028	0,20	61	18	22
		Plexus-IS 60	287	0,014	0,06	401	0,019	0,10	501	0,024	0,16	590	0,028	0,21	676	0,032	0,27	62	<20	<24
		Plexus-IS 120	415	0,020	0,21	539	0,026	0,33	649	0,031	0,47	759	0,036	0,62	870	0,042	0,79	62	<20	<24
72	20	Plexus-IL 60	304	0,015	0,06	421	0,020	0,11	521	0,025	0,17	612	0,029	0,22	701	0,033	0,29	62	21	25
		Plexus-IM 60	304	0,015	0,06	421	0,020	0,11	521	0,025	0,17	612	0,029	0,22	701	0,033	0,29	62	27	31
		Plexus-IS 60	363	0,017	0,09	485	0,023	0,15	589	0,028	0,21	689	0,033	0,28	789	0,038	0,35	64	21	25
		Plexus-IS 120	510	0,024	0,30	643	0,031	0,46	774	0,037	0,64	905	0,043	0,85	1037	0,050	1,09	64	17	21
90	25	Plexus-IM 60	367	0,018	0,09	489	0,023	0,15	593	0,028	0,21	694	0,033	0,28	795	0,038	0,36	63	27	31
		Plexus-IS 120	584	0,028	0,39	733	0,035	0,58	882	0,042	0,81	1031	0,049	1,08	1181	0,056	1,38	66	20	24
108	30	Plexus-IM 60	412	0,020	0,11	537	0,026	0,18	646	0,031	0,25	755	0,036	0,33	865	0,041	0,42	65	28	32
		Plexus-IH 60	412	0,020	0,11	537	0,026	0,18	646	0,031	0,25	755	0,036	0,33	865	0,041	0,42	65	31	35
		Plexus-IS 120	644	0,031	0,46	808	0,039	0,69	972	0,046	0,97	1137	0,054	1,29	1303	0,062	1,64	68	23	27
126	35	Plexus-IH 60	441	0,021	0,12	566	0,027	0,19	681	0,033	0,27	797	0,038	0,36	913	0,044	0,46	67	31	35
		Plexus-IS 120	693	0,033	0,52	869	0,042	0,79	1046	0,050	1,10	1223	0,058	1,47	1401	0,067	1,87	71	26	30
144	40	Plexus-IH 60	456	0,022	0,13	582	0,028	0,20	701	0,033	0,29	819	0,039	0,38	938	0,045	0,49	69	32	36

Table 5. Flow-adjusted effect table. Heating circuit Δt_w = 5° C (Water in-out)

Nozzle pressure 80 Pa			Water															Air		
q_A (m³/h)	q_A (l/s)	Plexus	Δt_{rw} = 20 K			Δt_{rw} = 25 K			Δt_{rw} = 30 K			Δt_{rw} = 35 K			Δt_{rw} = 40 K			Total pressure duct	Noise press level	Noise effect level
			P(W)	q(l/s)	p(kPa)	P(W)	q(l/s)	p(kPa)	P(W)	q(l/s)	p(kPa)	P(W)	q(l/s)	p(kPa)	P(W)	q(l/s)	p(kPa)	Pa	dB(A)	dB(A)
36	10	Plexus-IL 60	152	0,007	0,02	217	0,010	0,03	293	0,014	0,06	371	0,018	0,09	443	0,021	0,12	81	17	21
		Plexus-IS 60	202	0,010	0,03	292	0,014	0,06	385	0,018	0,10	469	0,022	0,14	545	0,026	0,18	81	18	22
54	15	Plexus-IL 60	238	0,011	0,04	341	0,016	0,08	439	0,021	0,12	524	0,024	0,17	602	0,029	0,22	81	22	26
		Plexus-IS 60	312	0,015	0,07	429	0,021	0,12	532	0,025	0,17	622	0,030	0,23	712	0,034	0,29	82	18	22
72	20	Plexus-IL 60	321	0,015	0,07	440	0,021	0,12	542	0,026	0,18	634	0,030	0,24	726	0,035	0,30	82	24	28
		Plexus-IS 60	394	0,019	0,10	516	0,025	0,16	624	0,030	0,23	730	0,035	0,31	836	0,040	0,39	84	23	27
		Plexus-IS 120	542	0,026	0,34	680	0,032	0,51	819	0,039	0,71	957	0,046	0,94	1097	0,052	1,20	84	21	25
90	25	Plexus-IL 60	387	0,019	0,10	510	0,024	0,16	617	0,029	0,23	721	0,034	0,30	826	0,039	0,39	83	27	31
		Plexus-IM 60	387	0,019	0,10	510	0,024	0,16	617	0,029	0,23	721	0,034	0,30	826	0,039	0,39	83	32	36
		Plexus-IS 60	442	0,021	0,12	568	0,027	0,19	683	0,033	0,27	799	0,038	0,36	915	0,044	0,46	86	26	30
		Plexus-IS 120	618	0,030	0,43	775	0,037	0,64	933	0,045	0,90	1091	0,052	1,19	1250	0,060	1,52	86	23	27
108	30	Plexus-IM 60	435	0,021	0,12	560	0,027	0,19	674	0,032	0,27	788	0,038	0,35	903	0,043	0,45	85	32	36
		Plexus-IS 120	683	0,033	0,51	857	0,041	0,77	1031	0,049	1,08	1206	0,058	1,43	1381	0,066	1,82	88	24	28
126	35	Plexus-IH 60	486	0,023	0,15	616	0,029	0,23	741	0,035	0,32	867	0,041	0,42	993	0,047	0,54	89	35	39
		Plexus-IS 120	778	0,037	0,65	977	0,047	0,98	1175	0,056	1,36	1375	0,066	1,81	1575	0,075	2,31	95	30	34
144	40	Plexus-IH 60	496	0,024	0,15	627	0,030	0,23	754	0,036	0,33	882	0,042	0,43	1010	0,048	0,56	94	37	41

Table 6. Flow-adjusted effect table. Heating circuit Δt_w = 5° C (Water in-out)

Supply air beam Plexus

Heating effect, Plexus

Nozzle pressure 100 Pa			Water															Air		
q_A (m³/h)	q_A (l/s)	Plexus	Δt_{rw} = 20 K			Δt_{rw} = 25 K			Δt_{rw} = 30 K			Δt_{rw} = 35 K			Δt_{rw} = 40 K			Total pressure duct	Noise press level	Noise effect level
			P(W)	q(l/s)	p(kPa)	P(W)	q(l/s)	p(kPa)	P(W)	q(l/s)	p(kPa)	P(W)	q(l/s)	p(kPa)	P(W)	q(l/s)	p(kPa)	Pa	dB(A)	dB(A)
36	10	Plexus-IL 60	251	0,012	0,04	357	0,017	0,08	456	0,022	0,13	543	0,026	0,18	622	0,030	0,23	101	23	27
		Plexus-IS 60	337	0,016	0,08	456	0,022	0,13	559	0,027	0,19	654	0,031	0,25	749	0,036	0,32	102	23	27
54	15	Plexus-IL 60	338	0,016	0,08	458	0,022	0,13	561	0,027	0,19	656	0,024	0,25	751	0,036	0,32	102	26	30
		Plexus-IS 60	423	0,020	0,11	547	0,026	0,18	659	0,031	0,26	771	0,037	0,34	883	0,042	0,43	104	24	28
		Plexus-IS 120	572	0,027	0,37	717	0,034	0,56	863	0,041	0,78	1010	0,048	1,04	1157	0,055	1,32	104	24	28
72	20	Plexus-IL 60	407	0,019	0,11	532	0,025	0,17	640	0,031	0,24	748	0,036	0,32	857	0,041	0,41	103	29	33
		Plexus-IM 60	407	0,019	0,11	532	0,025	0,17	640	0,031	0,24	748	0,036	0,32	857	0,041	0,41	103	35	39
		Plexus-IS 60	474	0,023	0,14	602	0,029	0,22	725	0,035	0,30	848	0,041	0,40	971	0,046	0,52	106	28	32
		Plexus-IS 120	652	0,031	0,47	818	0,039	0,71	985	0,047	0,99	1152	0,055	1,31	1319	0,063	1,68	106	25	29
90	25	Plexus-IL 60	457	0,022	0,13	583	0,028	0,20	702	0,034	0,29	821	0,039	0,38	941	0,045	0,49	105	32	36
		Plexus-IM 60	457	0,022	0,13	583	0,028	0,20	702	0,034	0,29	821	0,039	0,38	941	0,045	0,49	105	35	39
		Plexus-IS 60	498	0,024	0,15	629	0,030	0,23	757	0,036	0,33	885	0,042	0,44	1014	0,048	0,56	109	31	35
		Plexus-IS 120	722	0,034	0,57	905	0,043	0,85	1090	0,052	1,19	1274	0,061	1,58	1460	0,070	2,02	108	27	31
108	30	Plexus-IM 60	492	0,024	0,15	622	0,030	0,23	749	0,036	0,32	876	0,042	0,43	1004	0,048	0,55	107	36	40
		Plexus-IS 120	780	0,037	0,65	979	0,047	0,98	1178	0,056	1,37	1377	0,066	1,82	1578	0,075	2,32	111	29	33
126	35	Plexus-IM 60	516	0,025	0,16	650	0,031	0,25	782	0,037	0,35	915	0,044	0,46	1048	0,050	0,59	109	36	40
		Plexus-IH 60	516	0,025	0,16	650	0,031	0,25	782	0,037	0,35	915	0,044	0,46	1048	0,050	0,59	109	39	43
		Plexus-IS 120	827	0,040	0,72	1038	0,050	1,09	1249	0,060	1,52	1461	0,070	2,02	1673	0,080	2,58	115	31	35
144	40	Plexus-IH 60	539	0,026	0,18	677	0,032	0,27	814	0,039	0,38	953	0,046	0,50	1091	0,052	0,64	114	39	43
		Plexus-IS 120	889	0,042	0,82	1115	0,053	1,24	1342	0,064	1,73	1570	0,075	2,30	1798	0,086	2,94	123	37	41

Table 7. Flow-adjusted effect table. Heating circuit Δt_w = 5° C (Water in-out)

Nozzle pressure 120 Pa			Water															Air		
q_A (m³/h)	q_A (l/s)	Plexus	Δt_{rw} = 20 K			Δt_{rw} = 25 K			Δt_{rw} = 30 K			Δt_{rw} = 35 K			Δt_{rw} = 40 K			Total pressure duct	Noise press level	Noise effect level
			P(W)	q(l/s)	p(kPa)	P(W)	q(l/s)	p(kPa)	P(W)	q(l/s)	p(kPa)	P(W)	q(l/s)	p(kPa)	P(W)	q(l/s)	p(kPa)	Pa	dB(A)	dB(A)
36	10	Plexus-IL 60	264	0,013	0,05	374	0,018	0,09	473	0,023	0,14	560	0,027	0,19	642	0,031	0,24	121	25	29
		Plexus-IS 60	361	0,017	0,09	482	0,023	0,14	587	0,028	0,21	686	0,033	0,27	786	0,038	0,35	122	25	29
54	15	Plexus-IL 60	355	0,017	0,08	476	0,023	0,14	580	0,028	0,20	678	0,024	0,27	777	0,037	0,34	122	29	33
		Plexus-IS 60	450	0,022	0,13	576	0,028	0,20	694	0,033	0,28	811	0,039	0,37	929	0,044	0,48	124	25	29
		Plexus-IS 120	601	0,029	0,41	755	0,036	0,61	908	0,043	0,86	1062	0,051	1,14	1217	0,058	1,45	124	26	30
72	20	Plexus-IL 60	426	0,020	0,12	551	0,026	0,18	663	0,032	0,26	776	0,037	0,34	889	0,042	0,44	123	30	34
		Plexus-IS 60	504	0,024	0,16	637	0,030	0,24	766	0,037	0,34	896	0,043	0,45	1027	0,049	0,57	126	29	33
		Plexus-IS 120	686	0,033	0,52	861	0,041	0,78	1036	0,050	1,09	1212	0,058	1,44	1388	0,066	1,84	126	28	32
90	25	Plexus-IL 60	478	0,023	0,14	607	0,029	0,22	730	0,035	0,31	854	0,041	0,41	979	0,047	0,52	125	33	37
		Plexus-IM 60	478	0,023	0,14	607	0,029	0,22	730	0,035	0,31	854	0,041	0,41	979	0,047	0,52	125	38	42
		Plexus-IS 60	533	0,025	0,17	669	0,032	0,26	805	0,038	0,37	941	0,045	0,49	1078	0,052	0,63	129	32	36
		Plexus-IS 120	760	0,036	0,62	954	0,046	0,94	1148	0,055	1,31	1343	0,064	1,73	1538	0,073	2,22	128	29	33
108	30	Plexus-IM 60	516	0,025	0,16	651	0,031	0,25	783	0,037	0,35	916	0,044	0,46	1049	0,050	0,59	127	38	42
		Plexus-IS 120	824	0,039	0,72	1033	0,049	1,08	1244	0,059	1,51	1455	0,070	2,00	1666	0,080	2,56	131	30	34
126	35	Plexus-IM 60	545	0,026	0,18	684	0,033	0,27	823	0,039	0,38	963	0,046	0,51	1103	0,053	0,65	129	39	43
		Plexus-IS 120	876	0,042	0,80	1099	0,053	1,21	1323	0,063	1,69	1547	0,074	2,24	1772	0,085	2,86	135	32	36
144	40	Plexus-IH 60	579	0,028	0,20	727	0,035	0,31	875	0,042	0,43	1023	0,049	0,57	1172	0,056	0,73	134	41	45
		Plexus-IS 120	948	0,045	0,93	1190	0,057	1,39	1432	0,068	1,95	1675	0,080	2,59	1918	0,092	3,30	143	37	41

Table 8. Flow-adjusted effect table. Heating circuit Δt_w = 5° C (Water in-out)

Right to alterations reserved

Supply air beam Plexus

Dimensioning Sound

To find the sound effect level (L_{wA}) for Plexus you need to use total air pressure in the inlet of The unit (Δp) and actual air volume.

Total air pressure can be found if you use the projected static air pressure before the nozzles of the unit and then add Δp which is found in diagram 8.

Now you can find the actual sound effect level (L_{WA}) in diagrams 10 to 12.

The values in brackets are sound pressure level (L_{PA}) at 4 dB(A) room attenuation (10 m² sabine).

Example:
Plexus I 60 with a primary airflow of 20 l/s and a static pressure before nozzles at 60 Pa.

1. In diagram 9 you find 3,7 Pa at 20 l/s, Total pressure $\Delta p_t = 60 + 4{,}0 \approx 64$ Pa.

2. In diagram 10 you find 20 l/s and 64 Pa which shows, a sound effect level (L_{WA}) of 25 dB(A).

You can also read the value of sound pressure level (L_{PA}) to 21 dB(A), in the brackets at a 4 dB(A) room attenuation (10 m² Sabine)

3. At the same time it can be seen in the diagram that the adjustment points on the beam should be set at 6,5. Since the setting only allows integers and we have 4 adjustment points this results in that two adjustment points should be set at 6 and two adjustment points at 7 at the actual air volume and air pressure.

Sound attenuation ΔL

Plexus attenuation ΔL, between air duct and room including end-reflection.

Plexus Kok	63Hz	125Hz	250Hz	500Hz	1kHz	2kHz	4kHz	8kHz
S 60	12	-3	-4	-4	-4	-8	-11	-16
S 120	11	-1	-1	-2	-5	-9	7	13
L 60	10	-2	-1	-1	-4	-12	-21	18
M 60	11	-5	-3	-3	-4	-8	-17	-18
H 60	12	-4	-4	-5	-4	-7	-14	-20

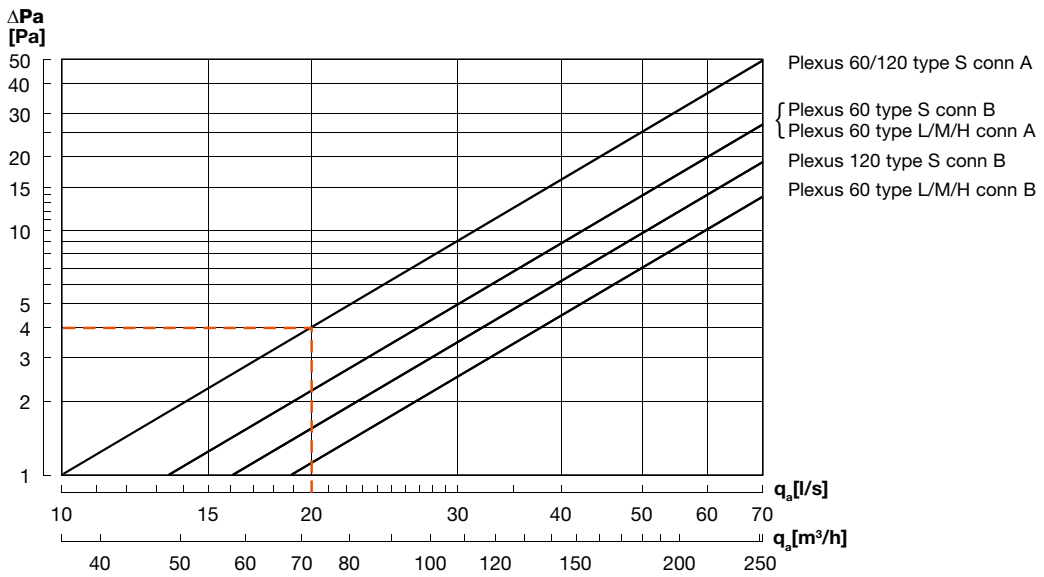

Diagram 9 . Difference between total pressure in duct and static pressure in nozzles

Supply air beam Plexus

1 2 3 4 5 6 7 8 9 10 11 12 13 14 15 16 17 18 19

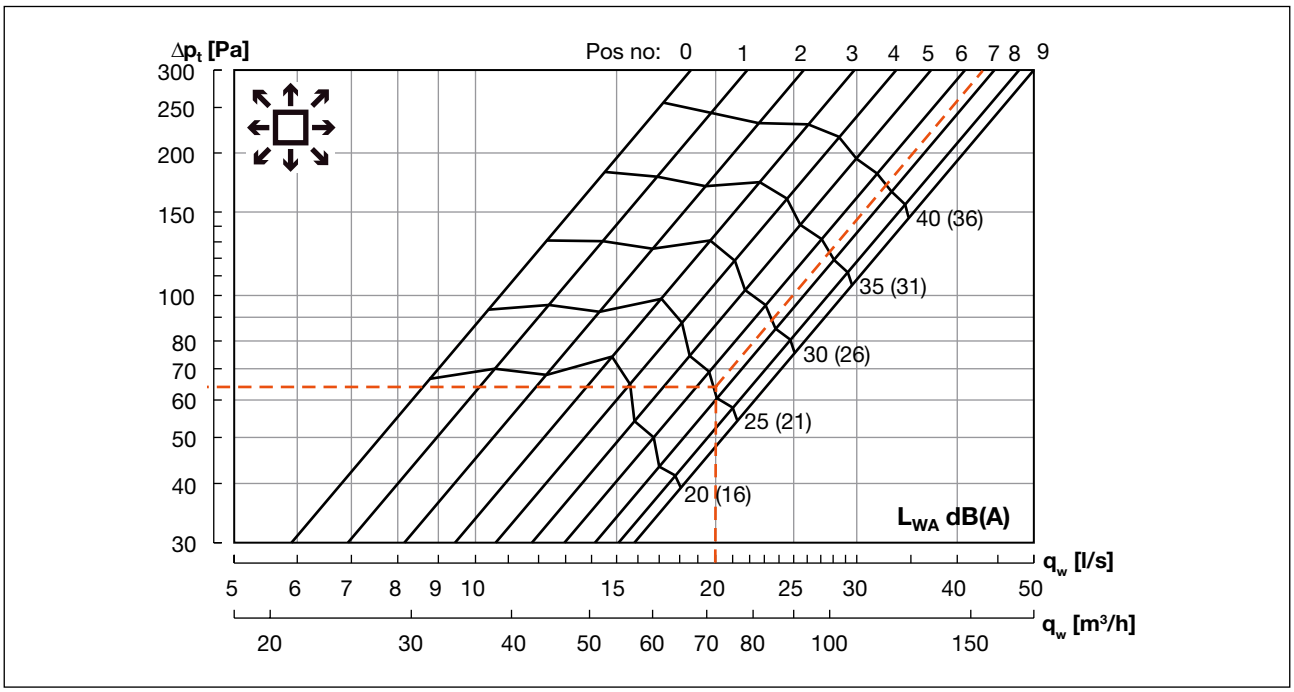

Diagram 9. Sound effect level L_{WA} Plexus 60 all models configuration S.

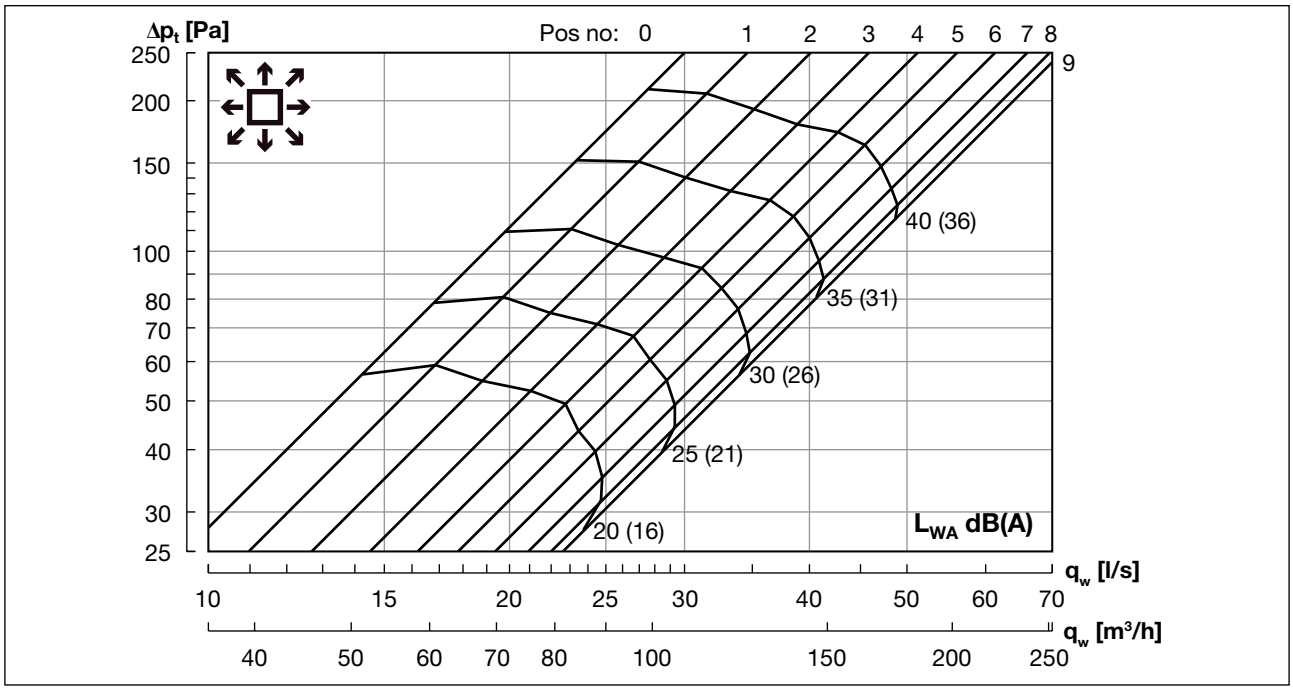

Diagram 10. Sound effect level L_{WA} Plexus 120 all models configuration S.

Right to alterations reserved

Supply air beam Plexus

Diagram, sound

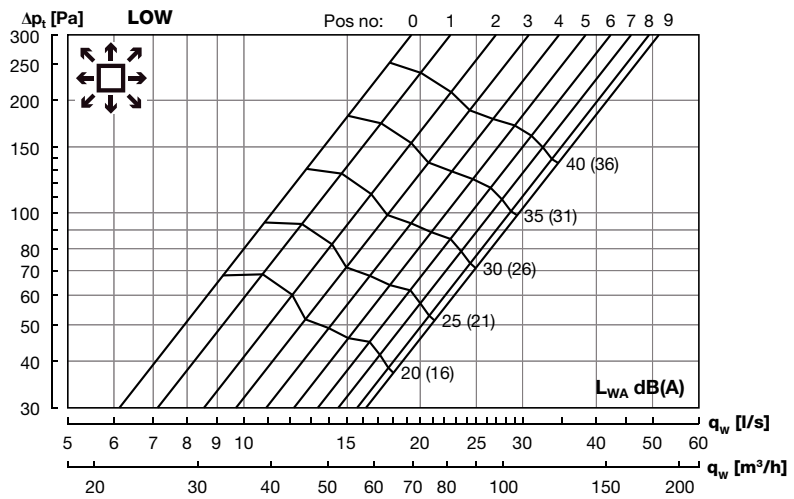

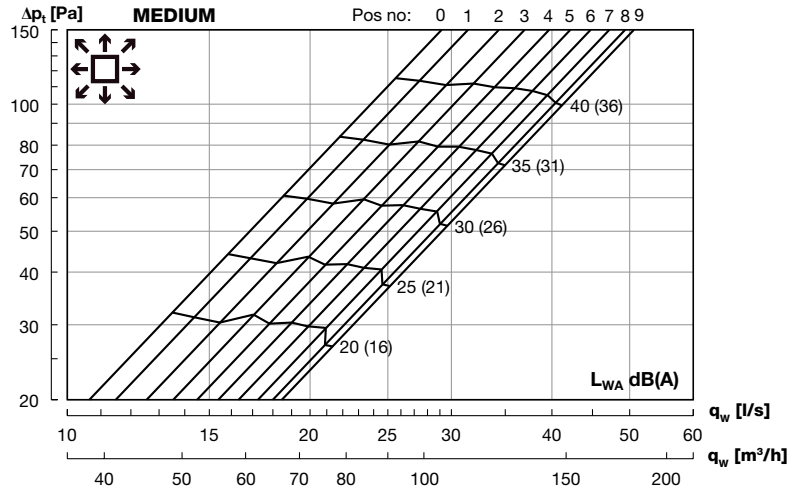

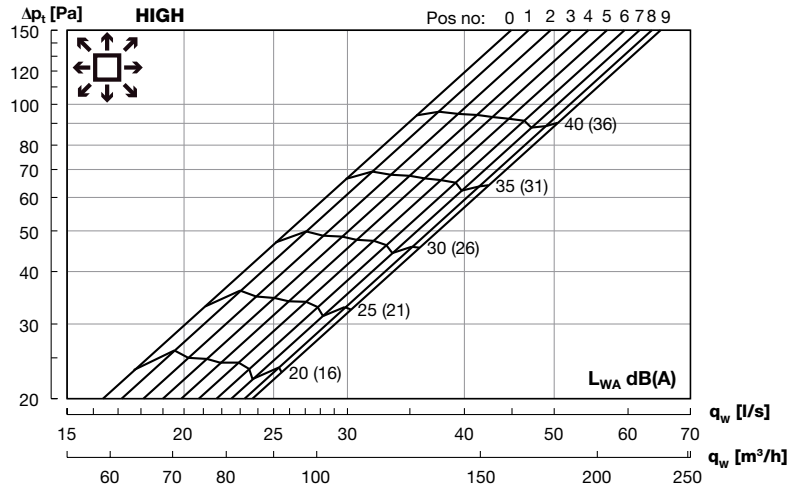

Diagram 11. Sound effect level L_{WA} for Plexus 60 all models configuration L/M/H.

Supply air beam Plexus

Throw lengths

Plexus 60 ΔT_a = 6K, ΔT_w = 8K

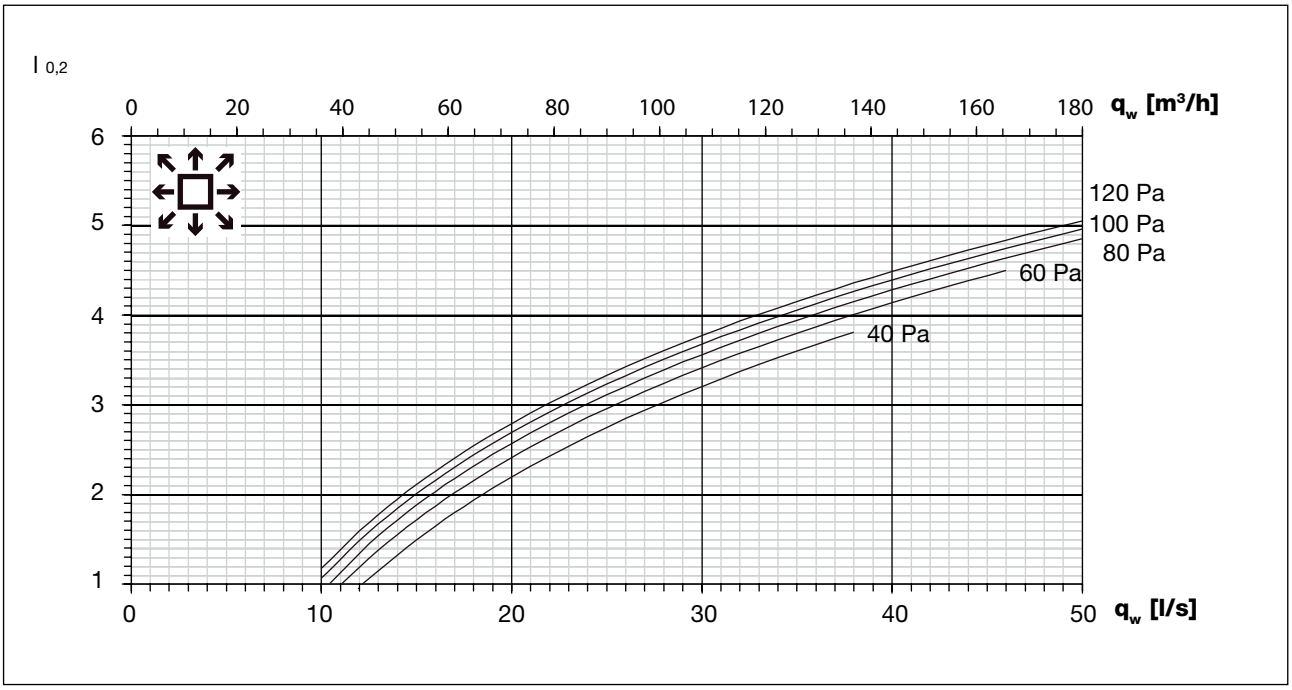

Diagram 12. Plexus 60, defined by given under temperature.

ΔT_a = Room temperature - Supply air temperature

ΔT_w = Room temperature - Average water temperature

Plexus 120 ΔT_a = 6K, ΔT_w = 8K

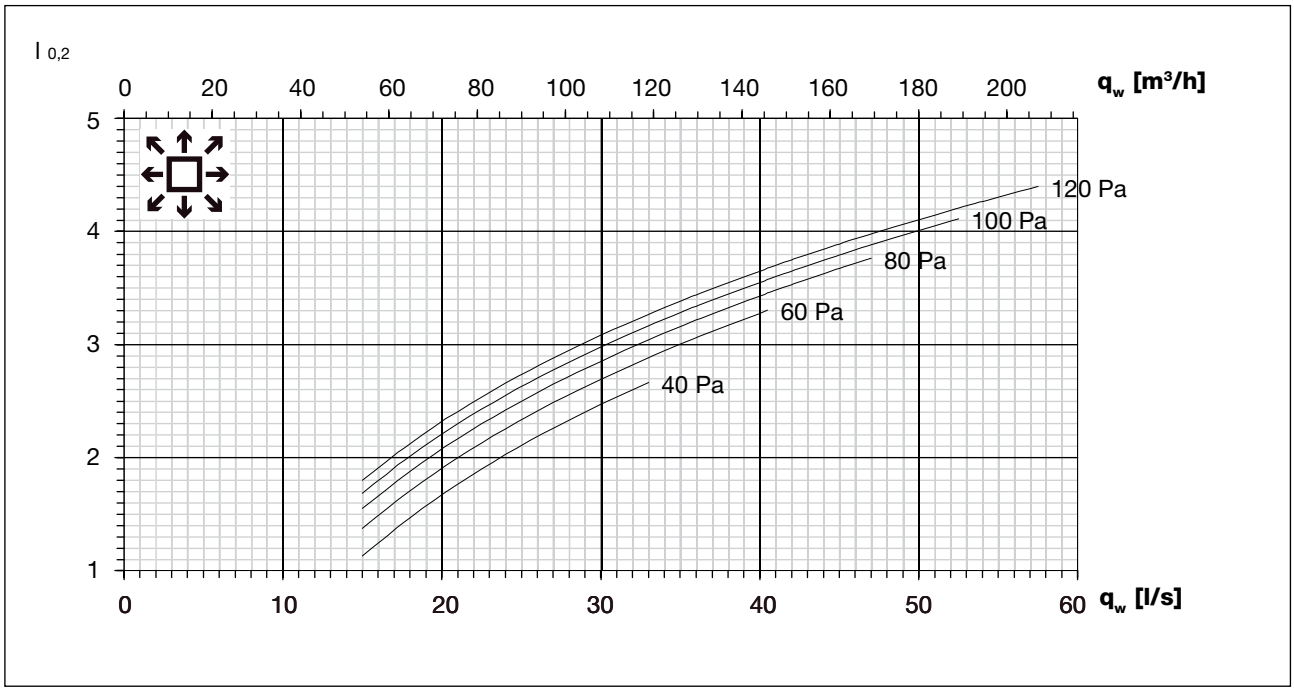

Diagram 13. Plexus 120, defined by given under temperature.

ΔT_a = Room temperature - Supply air temperature

ΔT_w = Room temperature - Average water temperature

Right to alterations reserved

Supply air beam Plexus

Throw lengths

Plexus F 60 ΔT_a = 6K, ΔT_w = 8K

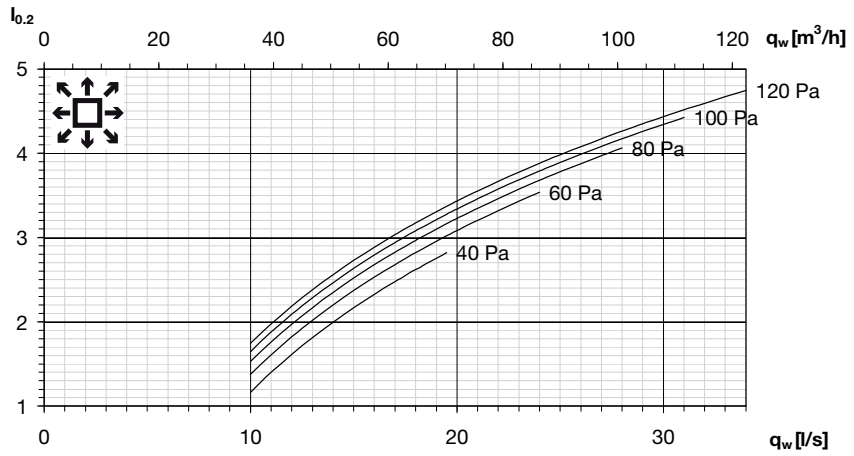

Diagram 14. Plexus F 60, defined by given under temperature.

ΔT_a = Room temperature - Supply air temperature

ΔT_w = Room temperature - Average water temperature

Supply air beam Plexus

Connections

Plexus 60

Water connection Ø12 mm. Supply air connection Ø125 mm (A) alternatively S Ø125 mm (B), L/M/H Ø160 mm (B).

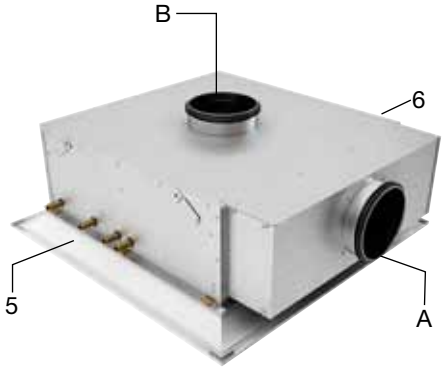

Example of water connections

To the left some connection alternatives are shown. Alternative A5, has horizontally connection for ventilation and water connection from left, seen in the direction of airflow. When plus feature heating is chosen the heating connections are placed in opposite side, to the left for connection 5 and to the right for connection 6, looking into the ventilation connection. For air connection type B is the heating connections placed such as for A, and the picture illustrate, to the left for B5 and right for B6.

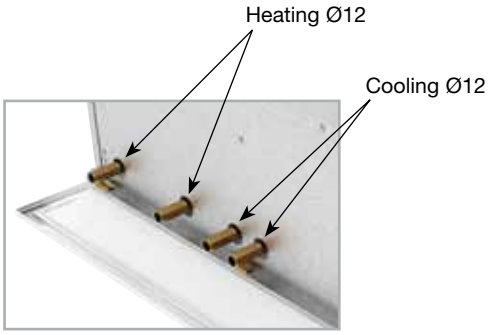

Plexus 120

Water connection Ø12 mm. Supply air connection Ø125 mm (A) alternatively Ø160 mm (B).

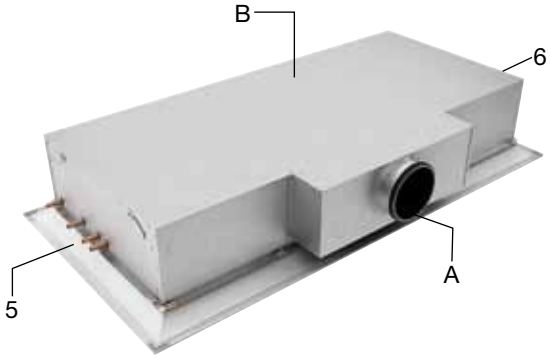

Example of water connections

To the left some connection alternatives are shown. Alternative A5, has horizontally connection for ventilation and water connection from left, seen in the direction of airflow. When plus feature heating is chosen the heating connections are placed in opposite side, to the left for connection 5 and to the right for connection 6, looking into the ventilation connection. For air connection type B is the heating connections placed such as for A, and the picture illustrate, to the left for B5 and right for B6.

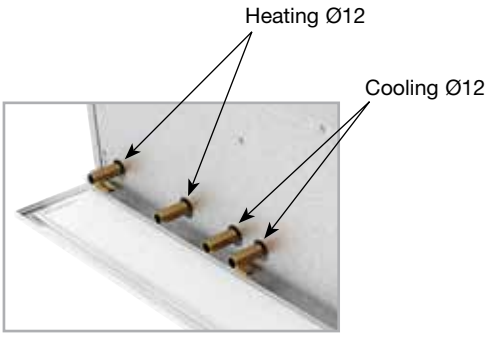

Right to alterations reserved

Supply air beam

Plexus

Connections

Plexus F

Water connection Ø12 mm. Supply air connection Ø125 mm (A) and (B).

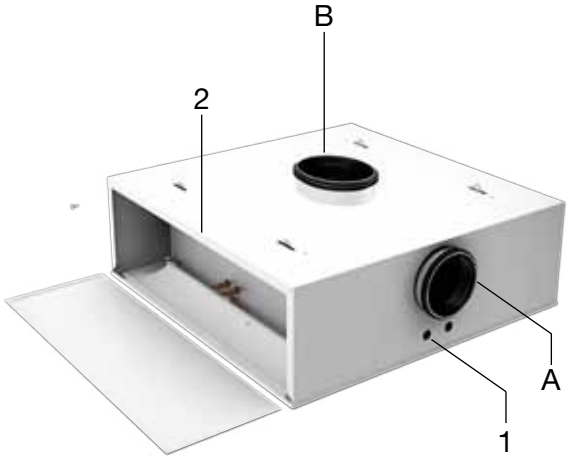

Example of Water Connections

The drawing to the left shows connection possibilities A1, A2, B1 and B2 for Plexus F. A is for horizontal and B is for vertical air connection.

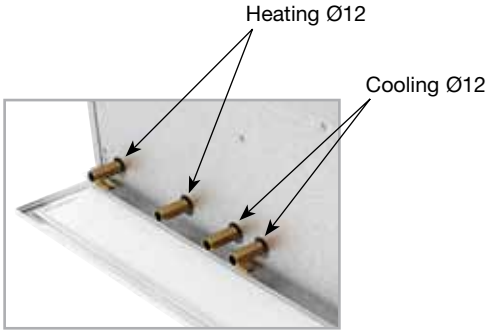

Supply air beam

Plexus

1 2 3 4 5 6 7 8 9 10 11 12 13 14 15 16 17 18 19

Dimensions, mm

Plexus 60

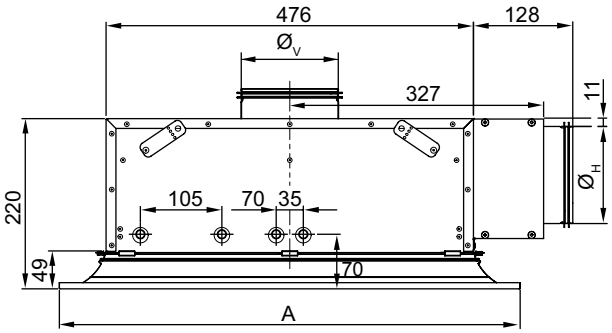

Weight 11.6 kg (excl. water)
Water volume 1L

Plexus 120

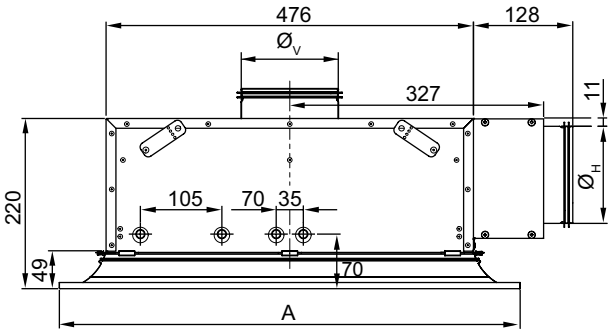

Weight 21.4 kg (excl. water)
Water volume 2.5 L

Plexus F

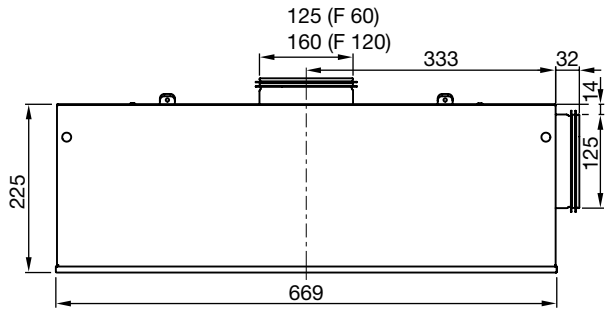

F 60 Weight 17.2 kg (excl. water) - Water volume 2.5 L
F 120 Weight 31.7 kg (excl. water) - Water volume 1 L

Dimensions Plexus

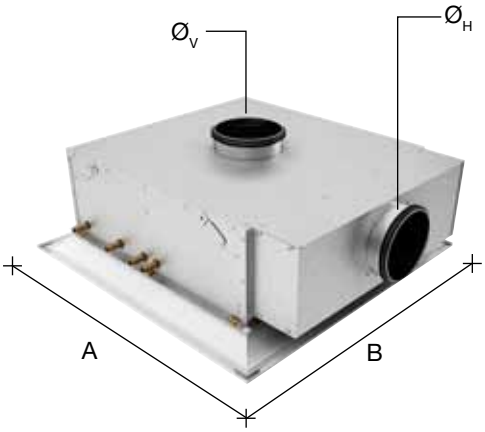

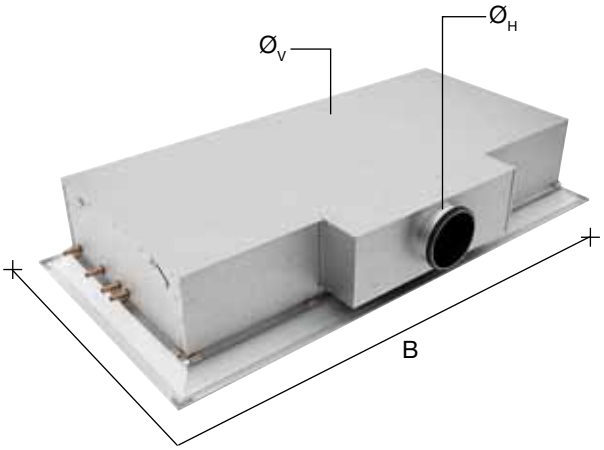

Type	A	B	Ø$_H$	Ø$_V$
I (S, L, M, H) 60	594	594	125	125/160
X (S, L, M, H) 60	599	599	125	125/160
U (S, L, M, H) 60	599	599	125	125/160
Y (S, L, M, H) 60	575	575	125	125/160
Z (S, L, M, H) 60	584	584	125	125/160
I (S, L, M, H) 62	619	619	125	125/160
I (S, L, M, H) 67	669	669	125	125/160
I S 120	594	1194	125	160
X S 120	599	1199	125	160
Y S 120	575	1174	125	160
Z S 120	584	1183	125	160
U S 120*	599	1209	125	160
I S 122	619	1244	125	160

Plexus 60 in config. S has Ø$_v$ 125 and L/M/H Ø$_v$ 160
* Plexus U 120 is for American 2' x 2' ceiling system

Right to alterations reserved

Supply air beam Plexus

Plexus & accessories

Lindab can offer a wide series of regulation possibilities with Lindab Regula. Regula Combi can be fitted into Plexus, or it can be used as an external regulator.

With Regula Combi you are able to control and regulate both the heating and cooling valves within Plexus, this means that only one regulator can easily control the Indoor Climate in the room. With Regula Connect you can even control more than one Comfort unit in one regulator.

Regula Combi

Regula secura

This regulator offers you the possibility to ensure that condensation in Plexus does not occur.

Drypac™

Plexus can be delivered with Drypac™ which makes it possible to use even lower water temperatures without condensation, and thereby increase the cooling capacity. With Drypac™ it is possible to use a water temperature 2 °C below dew point without getting any condensation problems. For further information see chapter Drypac™.

Battery with Drypac™

Plexus & Lindab Safe Click

Plexus is equipped with Lindab Safe Click as a standard, which makes the usage of a screw or pop rivet unnecessary, and facilitates a fast installation of the comfort units.

Variants

Water Connection: Standard Ø12 mm water connection.

Air Connection: Standard Ø125 mm horizontal connection or Ø125/160 mm vertical connection (see Connections chapter).

Plus features

Build in valves and actuators: All models of Plexus can be delivered with valves and actuators.

Connection Card: When using Regula Connect, the Connection Card ensures fast and easy wiring between the units actuators.

Down fold battery: Requires connection with flex hose. Battery runs down about 20 cm at one end.

For further plus features see earlier chapter Plus features

Order code

Product Plexus	I	S	60	12	125	A5	60	20

Ceiling adaption:
I = Integrated, lay-in
X = i.e. hidden T-bar, edge DS
Y = i.e. edge E T24
Z = i.e. edge E T15
F = Free hanging

Configuration:
S = Standard
L = Low
M = Medium
H = High

Size:
60, 62, 67
120, 122

Water connection:
12 mm

Air connection:
Ø125 mm, Ø160 mm

Connection alternative:
A5, A6, B5, B6 (Plexus F A1, A2, B1, B2)

Static nozzle pressure (Pa)

Air volume (l/s)

Supply air beam

Professor

Contact, Overview, Index	1
Guideline heating and cooling	2
Plexus	3
Professor	**4**
Pilot	5
Architect	6
Polaris I & S	7
Plafond	8
Podium	9
Celo	10
Cabinett	11
Capella	12
Carat	13
Fasadium	14
Atrium H & C /Loggia	15
Regula	16
Drypac™	17
Lighting	18
TEKNOsim	19

© 02.2010 Lindab Ventilation A/S. All forms of reproduction without written permission are forbidden. Lindab® is the registered trademark of Lindab AB.
Lindab's products, systems, product and product group designations are protected by intellectual property rights (IPR).

Supply air beam Professor

Use

Lindab's supply air beam Professor provides great freedom for the installation, as its inset height is low, only 120 mm.

Professor is equipped with divergent nozzles, which provides a draft-free indoor climate.

Professor can be used for cooling, heating and ventilation. Professor can be furnished with the following features cooling, heating, ventilation, Drypac™ condensation protection, Regula Secura condensation guard, built-in valves and actuators, built-in lighting, built-in exhaust air valve, etc. It offers many possibilities and great flexibility.

Installation

Professor is available for both recessed and suspended installation.

Professor-I is installed as an integral part of a suspended ceiling, where the beam is mounted on top of a standard T-shaped support.

Professor -F is installed suspended.

Professor can be supplied with horizontal and vertical connections.

Worth noting

Due to its very low height of 120 mm, the beam can be mounted in cramped spaces, which leads to great flexibility. Lindab's supply air beams are Eurovent-certified and tested according to EN-15116, EN-14518.

Key figures

Length:	1.2 – 3.6 m
Width:	442 mm (45) in total. 592 mm (60)
Height:	120 mm
Capacity:	Cooling effect of up to 1390 W. Air quantity of up to 40 l/s

1 2 3 4 5 6 7 8 9 10 11 12 13 14 15 16 17 18 19

Supply air beam Professor

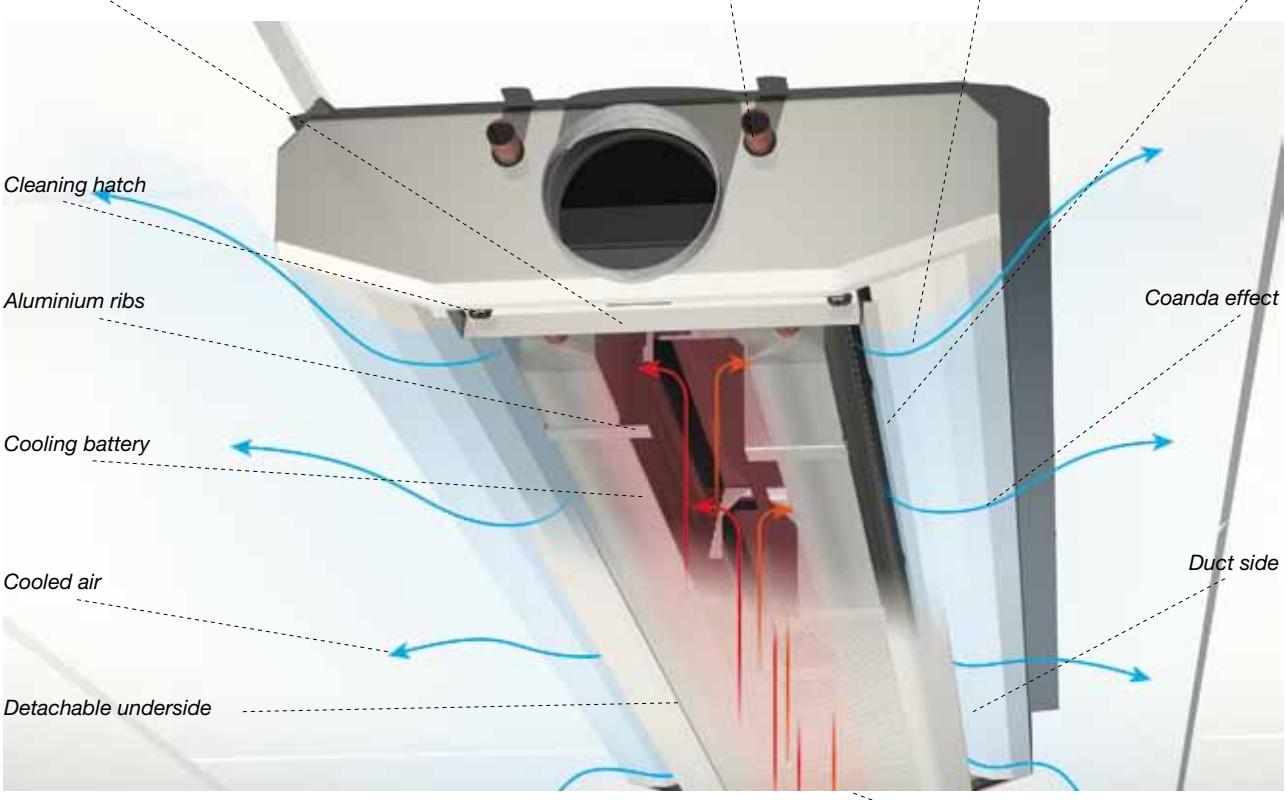

Picture 1. Professor is based on the induction principle.

Function

Powerful function in small format

Lindab's supply air beam, Professor, is based on the induction principle. Ventilation air at a given dynamic pressure is released through specially formed nozzles into a dispersal zone, thereby creating a low static pressure. This low pressure causes the warm air from the room to be sucked into the ventilation air through the battery. The volume of the warm indoor air is 4 to 5 times that of the ventilation air. The air is cooled as it passes through the battery, which consists of aluminium ribs with copper ducts filled with cold running water. The heat of the room is absorbed through the aluminium ribs and transferred through the copper pipe to the water circuit, and then goes further to a central cooling unit, (see Picture 1). Despite the small external dimensions of the product, the construction makes it possible to achieve a high cooling effect. The nozzles discharging the ventilation air are designed to maintain the Coanda effect, i.e. the adhesive capacity of the air in the duct, with a start in the nozzles. The air then follows the side of the duct towards the ceiling. The side of the beam is shaped so as to maintain the Coanda effect across the ceiling of the room.

Since the air leaves the beam only 9 cm below the ceiling, it has also been possible to achieve this function in the suspended models. Where both heating and cooling are required, there is an extra tube in the battery, which heats the room.

Hygiene

Everything is accessible from below

The requirement for all parts of the beam to be easy to clean has been met by the removable underside and the detachable cleaning and adjustment hatch. By loosening the hatch, you can clean both the incoming duct system, and the beam's side ducts, from the inside. The vertical batteries are accessible from three sides and thus can be cleaned thoroughly. The same applies to the Coanda nozzles, which can be easily cleaned from below. Thus, you can clean the product thoroughly access to the short sides of the product, which can thus be positioned directly against a wall.

We reserve the right to make changes

Supply air beam Professor

Construction

Maximum accessibility

For best possible accessibility for cleaning, suspension, adjustment or maintenance, the whole underside of the Lindab Professor can be dismantled. Where the beam is equipped with built-in valves and control devices, these are also accessible for adjustment and maintenance from below. The beam is suspended and adjusted before the underside is put in place. The product can be ordered so the volume of air can be varied on both sides. This is achieved by using different plugs on the Coanda nozzles.

We have succeeded in making the product so compact, by using double vertical batteries and double ducts. If other pressures and flow patterns are required, Lindab's Coanda nozzles are easily accessible, and can be plugged from below.

The water pipes are made of copper. Nevertheless, the water should be oxygen-free to prevent corrosion.

NB! When the airflow is adjusted, the maximum airflow at a given pressure is limited by the number of nozzles. You should consider your future needs and possibly choose a Professor with more plugged nozzles as early as when you place your order.

The construction is patented; all tests are conducted according to European standard EN 15116. Professor is certified by Eurovent.

Picture 2. Professor F, for suspended installation or installation directly on to the ceiling.

Picture 3. Professor I, for recessed installation in suspended ceiling.

Supply air beam Professor

Picture 4. Professor I-60 with underside, Slot (default).

Design

With many possibilities

High priority has been given to the desire for a compact product with an inset low height. The height of the beam is only 12 cm. The underside can have different appearances, either with transverse slots (slot, see picture 4) or round perforations (dot). The default is Slot. Lighting can be integrated into the 60-cm-wide version, without changing anything in the beam's construction, apart from the underside.

We reserve the right to make changes

Supply air beam Professor

Room environment

The ventilation principle for the Lindab Professor is that the cooled or heated air is spread across the ceiling until it reaches the walls where it is driven, to a certain extent, down into the room. The heated air is then absorbed from the space below the beam for further cooling or heating. In this way, the room is well ventilated. Conventional supply air beams, which spread the air linearly, can create high air velocities, as the air stream becomes compressed and concentrated towards the centre. To reduce air velocities, the air distribution in the Lindab Professor is angled outwards. The nozzles are successively directed outwards to ensure the optimum distribution and a short throw. The air velocities created, using this technology, are significantly lower than those for conventional supply air beams with linear outlet.

Through extensive studies, we have achieved the optimum distribution so as to minimise air velocities. More than 100,000 examples of the Professor have been sold so far and the users are very satisfied with the draft-free climate.

By using double air ducts, we have made use of all the volume of the beam. Therefore, the product can handle large volumes of air while keeping its own noise low, despite its small external dimensions.

As regards noise, the nozzles are shaped like an inverted trumpet, i.e. somewhat negatively directed at the outlet, which also leads to very low noise from the nozzle. The structure of the product, with a distribution channel to the double side ducts and a sound absorber on each end of the ducts, means that the internal sound dampening of the product is very good and that cross-noise in the ventilation system and between rooms is low.

Picture 5. Professor F-45 placed in an office environment.

Supply air beam Professor

Data

Variants

The Professor's width is either 442 mm (width 45) or 592 mm (width 60). Its height is 120 mm, with a low air duct, and 146 mm with a high air duct (for recessed installation in a suspended ceiling and with the air connection above the supporting structure).

Lengths: Professor is available in lengths from 1.2 m to 3.6 m in steps of 0.1 m.

Water connection: Available in o.d. 15 mm. Both horizontal and vertical connections available in the standard package.

Air connection: Available in Ø100 mm. Both horizontal and vertical connections available in the standard package.

Design: Professor is available with different types of underside. As standard, it is fitted with longitudinal slots (Slot), but round perforations (Dot) are also available.

Nozzle angle: The nozzles can be ordered with different angles, 0°, 16° or 30°. The standard angle is 30°.

Anti-cross-noise hood: This is included in the standard package to prevent the spread of noise to adjoining rooms, and also where there is a requirement for the room air not to come into contact with the space above the suspended ceiling.

Surface treatment: Professor is manufactured as standard from enamelled sheet metal, colour white, RAL 9010.

Airflow control: The product has a preset pressure drop value, so on-site adjustment is not necessary. A prerequisite is that the building's duct system has a relatively low-pressure drop compared to that of the product. If a damper is desired, you can order a balancing damper.

Plus features

Factory preinstalled.

Heating: The product can be equipped with an additional water circuit in the batteries to provide a heating function.

Drypac™: The batteries can be equipped with an anti-condensation surface layer, which ensures increased protection against condensation or increased power output (refer to chapter Drypac™).

Integrated valve and actuator: A control valve, with variable Kv value, and an actuator can be pre-installed in the product.

Lighting: The product can be equipped with type-approved light fittings (only applies to width 60). Refer to the chapter, Lighting.

Integrated control centre: It is possible to have Lindab's room control centre Regula pre-installed in the product. The control panel is fully accessible from below. Refer to the chapter Regula.

Regula Secura: Lindab's Regula Secura condensation guard can be installed in the product as an option.

Regula Connect: The product can be equipped with the Regula Connect connection card (refer to chapter Regula).

Adaptation for suspended ceilings: The product can be adapted to most types of suspended ceilings offered on the market.

Air vent: Air vents are not supplied as part of the standard package, but they can be ordered for pre-installation.

Exhaust valve: The product can be provided with an exhaust valve.

Special dimensions: Professor I-60 is available with a width of 625 mm.

Accessories

Delivered separately.

Control: Refer to the chapter Regula.

We reserve the right to make changes

Supply air beam Professor

Dimensioning

Cooling effect supplied in the ventilation air [W]

1. Start by calculating the required cooling effect that has to be supplied to the room in order to provide a certain temperature.
   Lindab's climate simulation program TEKNOsim is a great help here.
2. Calculate any cooling effect that is provided by the ventilation air.
3. The remaining cooling effect has to be supplied by the Professor.

Formula for air cooling effect: $P = \dot{m} \times C_p \times \Delta t$

Where:
$\dot{m}$ = mass flow [kg/s]
C_p = specific heat capacity [J/(kg·K]
q_p = air flow [l/s]
Δt = the difference between the temperature of the room and the temperature of the supply air [K].
It is usually $\dot{m} \times C_p \approx q_p \times 1.2$

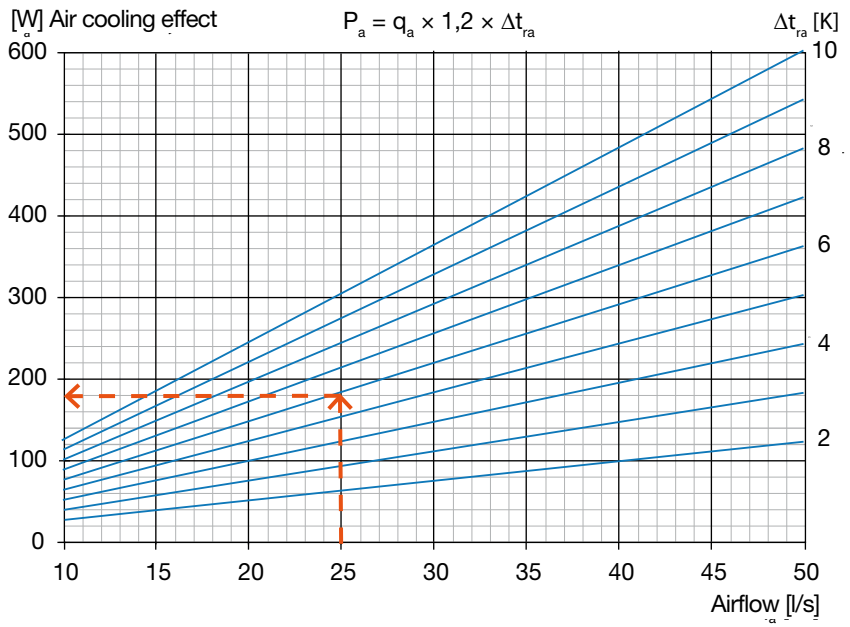

Diagram 1. Air cooling effect as a function of airflow. For example, if the air flow is 25 l/s and the under-temperature of the supply air is Δt = 6 K, the cooling effect from the graph is 180 W.

Supply air beam Professor

1 2 3 4 5 6 7 8 9 10 11 12 13 14 15 16 17 18 19

Dimensioning

Effect diagram

Follow the instructions below to read off the effect from the diagram.

1. Calculate Δt (room – average water)
2. Product length minus 0.3 m, to obtain the active length.
3. Divide the airflow by the active length. Enter the result on the lower axis of diagram 2.
4. Follow the flow line to the right pressure, and then read off the effect per active metre and Kelvin.
5. Multiply the effect that was read off by Δt.
6. Then, multiply by the active length.

Cooling
What is the cooling effect of a 2.4 m Professor with 20 l/s and pressure of 60 Pa?
The room's summer temperature is assumed to be 24.5° C
The cooling water temperature in/out of the Professor is 14/17° C
Answer
Temperature difference Δt = room – average water
Δt = 24.5 - (14+17) / 2 = 9 K
Active length = 2.4 m - 0.3 m = 2.1 m
20 l/s / 2.1 m = 9.5 l/(s·m)
Read off, from diagram 2. 30.7 W/(m·K).
Cooling effect (P) = 30.7 × 9 K × 2.1 m = 580 W

NB! The effect diagram applies for the nominal flow of 0.038 l/s. To obtain the right effect for other flows, read off the effect factor from diagram 3, and then multiply the effect, which is read off, by this factor (see example 1).

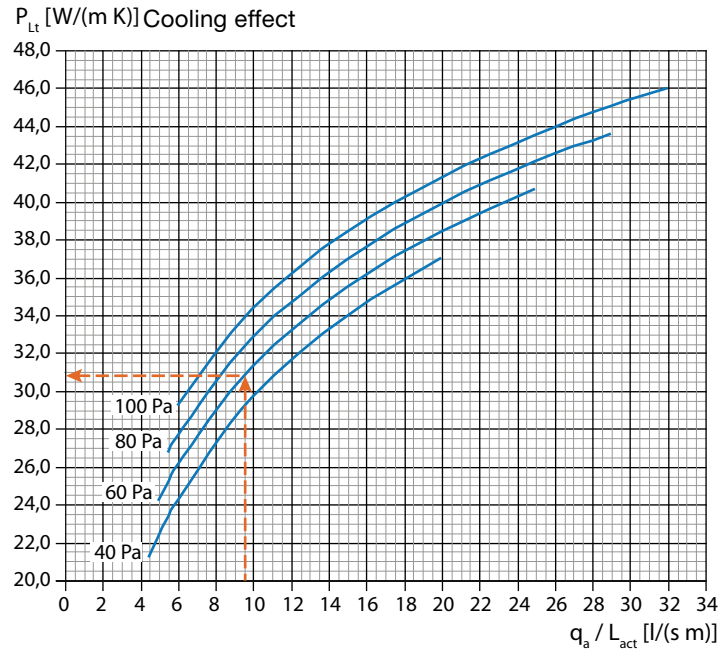

Diagram 2. Effect per active metre and Kelvin as a function of the airflow per active metre at nozzle pressures of 40, 60, 80 and 100 Pa.

Dimensioning

Pressure drop in air connection (Pa)

Table 1 below shows the pressure drop in the connection. After calculating the required pressure to the supply air beam, add it to the selected static pressure in the nozzles.

Example

Professor I 60-15-100-A1 at 20 l/s, and static nozzle pressure of 60 Pa. This gives a required total pressure in the duct of 60 Pa + 7 Pa = 67 Pa.

Professor							
Air flow (l/s)	10	15	20	25	30	35	40
Connection A	2	4	7	11	16	21	28
Connection B	2	3	6	9	12	16	21

Table 1. Air pressure drop in connection A, B in Professor F-45 and I-60.

We reserve the right to make changes

Supply air beam Professor

Dimensioning

Flow-adjusted effect factor

Example 1

Cooling
Read off the effect on the effect diagram and calculate your flow using the following formula: $q_w = P / (C_p \times \Delta t)$

Where:
q_w = water flow [l/s]
P = effect [W]
C_p= specific heat capacity [J/(kg·K)]
Δt = temperature difference in the water circuit in/out [K]

for example q_w = 580 / (4200 x 3) = 0.046 l/s
The effect factor will then be 1.039 (see diagram 3) and the new effect P = 580 x 1.039 = 603 W.

NB! To obtain an exact value, repeat the calculation and calculate a new flow for the obtained effect. Read off a new adjustment factor, multiply it by the original effect from the effect diagram and obtain a new effect (see example 2).

Example 2

Heating
What is the heating effect of a 2.4 m Professor at 20 l/s and a pressure of 60 Pa?
The room's winter temperature is assumed to be 21° C
The hot water temperature in/out of Professor is 56/46° C

Answer
Temperature difference Δt = room – average water
Δt = 21 - (56+46) / 2 = 30 K
Active length = 2.4 m - 0.3 m = 2.1 m
20 l/s / 2.1 m = 9.5 l/(s·m)

Read off from diagram 2. 30.7 W/(m·K).
Heating effect (P) = 30.7 × 30 K × 2.1 m = 1934 W

Use the calculated heating effect and calculate the water flow $q_w = P / (C_p \times \Delta t)$

Δt = temperature difference in the water circuit in/out [K]
q_w = 1934 / (4200 x 10) = 0.046 l/s

The effect factor will then be 0.83 (see diagram 3) and the new effect. P = 1934 x 0.83 = 1605 W

Using the new heating effect, a new water flow is calculated. q_w = 1605 / (4200 x10) = 0.038 l/s

Read off the effect factor at 0.8 and calculate the effect.
P = 1934 x 0.8 = 1547 W

Using the new heating effect, a new water flow is calculated. q_w = 1547 / (4200 x10) = 0.037 l/s

Read off the effect factor at 0.789 and calculate the effect.
P = 1934 x 0.789 = 1526 W

The heating effect is calculated to be 1526 W.

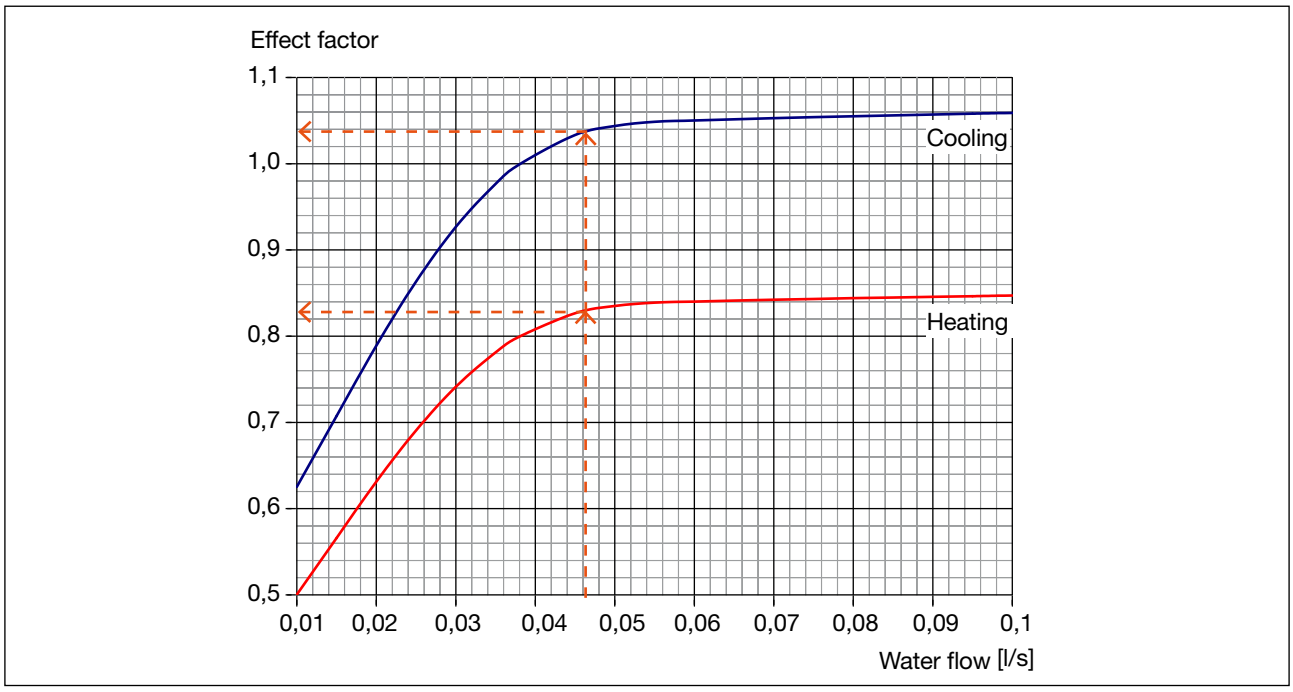

Diagram 3. Effect factor as a function of water flow.

Supply air beam Professor

Cooling effect, Professor

Drypac™, condensation protection

All Professor models can be ordered with the Drypac™ plus feature, condensation protection consisting of perlite (volcanic stone) that is applied to the fin surfaces. Drypac™ has properties that enable it to operate at a supply temperature 4°C below the dew point, for continuous operation, and 5 to 8° C below the dew point for limited periods. Drypac™ provides both an increased effect as well as increased security against condensation drips. At working temperatures above the dew point, the output is reduced by 17%. When the working temperature is below the dew point, there is no reduction in output. This means that the highest effect is obtained when the need is greatest.

For more information about Drypac™, refer to the chapter Drypac™.

Effect data

All table values are presented with flow-adjusted effects based on the Δt for Water out-in given in the table.

Lindab's supply air beams are Eurovent-certified and tested according to EN-15116, EN-14518.

Noise

The table below presents both the sound pressure level with 10 m² Sabine equivalent sound absorption area dB(A) and the noise level.

Nozzle pressure 60 Pa			Water															Air		
q_A (m³/h)	q_A (l/s)	Professor Con. A	Δt_{rw} = 7 K			Δt_{rw} = 8 K			Δt_{rw} = 9 K			Δt_{rw} = 10 K			Δt_{rw} = 11 K			Total pressure duct	Noise press level	Noise effect level
		L(m)	P(W)	q(l/s)	p(kPa)	P(W)	q(l/s)	p(kPa)	P(W)	q(l/s)	p(kPa)	P(W)	q(l/s)	p(kPa)	P(W)	q(l/s)	p(kPa)	Pa	dB(A)	dB(A)
36	10	1,2	129	0,010	0,1	156	0,012	0,1	186	0,015	0,2	219	0,017	0,2	256	0,020	0,2	62	<20	<24
		1,8	205	0,016	0,3	254	0,020	0,4	309	0,025	0,6	367	0,029	0,7	425	0,034	0,9			
54	15	1,2	154	0,012	0,1	188	0,015	0,2	226	0,018	0,2	269	0,021	0,3	0	0,025	0,3	64	21	25
		1,8	265	0,021	0,4	331	0,026	0,6	399	0,032	0,8	464	0,037	1,1	526	0,042	1,3			
		2,4	372	0,030	1,0	453	0,036	1,5	529	0,042	1,9	598	0,048	2,3	663	0,053	2,8			
		3,0	464	0,037	1,9	551	0,044	2,6	630	0,050	3,3	701	0,056	4,0	773	0,062	4,7			
72	20	1,2	170	0,014	0,1	209	0,017	0,2	253	0,020	0,2	301	0,024	0,3	352	0,028	0,4	67	24	28
		1,8	312	0,025	0,6	387	0,031	0,8	460	0,037	1,1	528	0,042	1,3	590	0,047	1,6			
		2,4	440	0,035	1,4	526	0,042	1,9	603	0,048	2,4	675	0,054	2,9	743	0,059	3,4			
		3,0	539	0,043	2,5	626	0,050	3,3	708	0,056	4,0	788	0,063	4,9	869	0,069	5,8			
		3,6	618	0,049	3,9	710	0,057	5,0	801	0,064	6,1	891	0,071	7,4	982	0,078	8,9			
90	25	1,8	347	0,028	0,7	426	0,034	0,9	501	0,040	1,2	570	0,045	1,5	635	0,051	1,8	71	26	30
		2,4	491	0,039	1,7	578	0,046	2,2	658	0,052	2,8	732	0,058	3,3	806	0,064	4,0			
		3,0	596	0,047	3,0	687	0,055	3,8	774	0,062	4,7	862	0,069	5,7	949	0,076	6,8			
		3,6	679	0,054	4,6	778	0,062	5,8	877	0,070	7,2	976	0,078	8,8	1075	0,086	10,5			
108	30	1,8	372	0,030	0,7	454	0,036	1,0	530	0,042	1,4	599	0,048	1,7	664	0,053	2,0	76	27	31
		2,4	529	0,042	1,9	616	0,049	2,5	698	0,056	3,1	776	0,062	3,7	855	0,068	4,4			
		3,0	642	0,051	3,4	735	0,059	4,3	829	0,066	5,3	922	0,073	6,5	1016	0,081	7,7			
		3,6	730	0,058	5,2	836	0,067	6,6	942	0,075	8,2	1049	0,084	10,0	1156	0,092	12,0			
126	35	1,8	393	0,031	0,8	477	0,038	1,1	553	0,044	1,5	623	0,050	1,8	688	0,055	2,1	81	28	32
		2,4	557	0,044	2,1	646	0,051	2,7	729	0,058	3,3	811	0,065	4,0	893	0,071	4,8			
		3,0	677	0,054	3,7	775	0,062	4,7	873	0,070	5,9	972	0,077	7,1	1071	0,085	8,5			
		3,6	774	0,062	5,8	886	0,071	7,4	999	0,080	9,2	1112	0,089	11,2	1225	0,098	13,3			
144	40	2,4	578	0,046	2,2	668	0,053	2,8	753	0,060	3,5	839	0,067	4,2	924	0,074	5,1	88	30	34
		3,0	705	0,056	4,0	808	0,064	5,1	910	0,072	6,3	1013	0,081	7,7	1116	0,089	9,2			
		3,6	811	0,065	6,3	929	0,074	8,0	1047	0,083	10,0	1166	0,093	12,2	1284	0,102	14,6			

Table 2. Flow-adjusted effect table. Cooling circuit Δt_w = 3° C (Water in-out).
For the red values, the flow is below the recommended minimum flow of 0.035 l/s at Δt_w = 3° C. Increase the flow to the recommended minimum flow.

We reserve the right to make changes

Supply air beam Professor

Cooling effect, Professor

Nozzle pressure 80 Pa			Water															Air		
q_A (m³/h)	q_A (l/s)	Professor Con. A	Δt_{rw} = 7 K			Δt_{rw} = 8 K			Δt_{rw} = 9 K			Δt_{rw} = 10 K			Δt_{rw} = 11 K			Total pres-sure duct	Noise press level	Noise effect level
		L(m)	P(W)	q(l/s)	p(kPa)	P(W)	q(l/s)	p(kPa)	P(W)	q(l/s)	p(kPa)	P(W)	q(l/s)	p(kPa)	P(W)	q(l/s)	p(kPa)	Pa	dB(A)	dB(A)
36	10	1,2	137	0,011	0,1	166	0,013	0,1	199	0,016	0,2	235	0,019	0,2	275	0,022	0,3	82	<20	<24
		1,8	224	0,018	0,3	279	0,022	0,5	339	0,027	0,6	400	0,032	0,8	460	0,037	1,1			
54	15	1,2	162	0,013	0,1	199	0,016	0,2	241	0,019	0,2	286	0,023	0,3	335	0,027	0,4	84	22	26
		1,8	286	0,023	0,5	356	0,028	0,7	427	0,034	0,9	494	0,039	1,2	556	0,044	1,5			
		2,4	404	0,032	1,2	488	0,039	1,6	564	0,045	2,1	636	0,051	2,6	700	0,056	3,1			
72	20	1,2	180	0,014	0,1	222	0,018	0,2	269	0,021	0,3	320	0,026	0,4	373	0,030	0,5	87	25	29
		1,8	334	0,027	0,6	412	0,033	0,9	486	0,039	1,2	555	0,044	1,5	617	0,049	1,8			
		2,4	470	0,037	1,5	556	0,044	2,1	636	0,051	2,6	707	0,056	3,1	779	0,062	3,7			
		3,0	573	0,046	2,8	663	0,053	3,6	748	0,060	4,4	832	0,066	5,4	917	0,073	6,4			
		3,6	658	0,052	4,3	754	0,060	5,5	850	0,068	6,8	946	0,075	8,3	1042	0,083	9,9			
90	25	1,2	198	0,016	0,2	246	0,020	0,2	299	0,024	0,3	355	0,028	0,4	411	0,033	0,5	91	27	31
		1,8	369	0,029	0,7	450	0,036	1,0	526	0,042	1,3	595	0,047	1,7	660	0,053	2,0			
		2,4	519	0,041	1,8	606	0,048	2,4	686	0,055	3,0	764	0,061	3,6	842	0,067	4,3			
		3,0	627	0,050	3,3	721	0,057	4,2	812	0,065	5,2	904	0,072	6,3	996	0,079	7,5			
		3,6	716	0,057	5,0	820	0,065	6,4	925	0,074	8,0	1029	0,082	9,7	1134	0,090	11,6			
108	30	1,8	394	0,031	0,8	478	0,038	1,1	554	0,044	1,5	623	0,050	1,8	689	0,055	2,1	96	28	32
		2,4	554	0,044	2,0	644	0,051	2,7	726	0,058	3,3	808	0,064	4,0	890	0,071	4,7			
		3,0	671	0,053	3,7	768	0,061	4,7	866	0,069	5,8	964	0,077	7,0	1062	0,085	8,4			
		3,6	766	0,061	5,7	878	0,070	7,2	989	0,079	9,0	1101	0,088	11,0	1213	0,097	13,1			
126	35	1,8	416	0,033	0,9	501	0,040	1,2	577	0,046	1,6	649	0,052	1,9	715	0,057	2,3	101	29	33
		2,4	581	0,046	2,2	672	0,053	2,9	757	0,060	3,5	843	0,067	4,3	928	0,074	5,1			
		3,0	705	0,056	4,0	808	0,064	5,1	911	0,073	6,3	1013	0,081	7,7	1117	0,089	9,2			
		3,6	810	0,064	6,3	927	0,074	8,0	1045	0,083	10,0	1163	0,093	12,1	1282	0,102	14,5			
144	40	1,8	439	0,035	1,0	525	0,042	1,3	602	0,048	1,7	674	0,054	2,1	742	0,059	2,4	108	31	35
		2,4	603	0,048	2,4	694	0,055	3,0	782	0,062	3,7	871	0,069	4,5	959	0,076	5,4			
		3,0	734	0,058	4,3	840	0,067	5,5	947	0,075	6,8	1054	0,084	8,3	1161	0,092	9,9			
		3,6	847	0,067	6,8	970	0,077	8,7	1093	0,087	10,8	1217	0,097	13,2	1340	0,107	15,8			

Table 3. Flow-adjusted effect table. Cooling circuit Δt_w = 3° C (Water in-out).
For the red values, the flow is below the recommended minimum flow of 0.035 l/s at Δt_w = 3° C. Increase the flow to the recommended minimum flow.

Supply air beam Professor

Cooling effect, Professor

Nozzle pressure 100 Pa			Water															Air		
q_A (m³/h)	q_A (l/s)	Professor Con. A	Δt_{rw} = 7 K			Δt_{rw} = 8 K			Δt_{rw} = 9 K			Δt_{rw} = 10 K			Δt_{rw} = 11 K			Total pres-sure duct	Noise press level	Noise effect level
		L(m)	P(W)	q(l/s)	p(kPa)	P(W)	q(l/s)	p(kPa)	P(W)	q(l/s)	p(kPa)	P(W)	q(l/s)	p(kPa)	P(W)	q(l/s)	p(kPa)	Pa	dB(A)	dB(A)
36	10	1,2	145	0,012	0,1	177	0,014	0,1	212	0,017	0,2	252	0,020	0,2	295	0,023	0,3	102	<20	<24
		1,8	245	0,020	0,4	306	0,024	0,5	371	0,030	0,7	435	0,035	1,0	496	0,039	1,2			
54	15	1,2	171	0,014	0,1	210	0,017	0,2	254	0,020	0,2	303	0,024	0,3	354	0,028	0,4	104	22	26
		1,8	308	0,025	0,6	382	0,030	0,8	455	0,036	1,0	522	0,042	1,3	585	0,047	1,6			
		2,4	437	0,035	1,4	523	0,042	1,9	600	0,048	2,3	671	0,053	2,9	740	0,059	3,4			
72	20	1,2	188	0,015	0,2	232	0,019	0,2	282	0,022	0,3	336	0,027	0,4	391	0,031	0,5	107	26	30
		1,8	355	0,028	0,7	435	0,035	1,0	510	0,041	1,3	579	0,046	1,6	644	0,051	1,9			
		2,4	499	0,040	1,7	586	0,047	2,3	666	0,053	2,8	741	0,059	3,4	816	0,065	4,0			
		3,0	608	0,048	3,1	700	0,056	4,0	789	0,063	4,9	878	0,070	5,9	967	0,077	7,1			
90	25	1,2	207	0,016	0,2	257	0,020	0,2	313	0,025	0,3	371	0,030	0,4	429	0,034	0,6	111	28	32
		1,8	388	0,031	0,8	471	0,038	1,1	547	0,044	1,4	617	0,049	1,8	682	0,054	2,1			
		2,4	544	0,043	2,0	634	0,051	2,6	715	0,057	3,2	796	0,063	3,9	877	0,070	4,6			
		3,0	659	0,053	3,6	755	0,060	4,5	851	0,068	5,6	948	0,075	6,8	1044	0,083	8,1			
		3,6	755	0,060	5,5	865	0,069	7,1	975	0,078	8,8	1085	0,086	10,7	1195	0,095	12,7			
108	30	1,8	413	0,033	0,9	497	0,040	1,2	574	0,046	1,6	645	0,051	1,9	711	0,057	2,3	116	29	33
		2,4	578	0,046	2,2	668	0,053	2,8	753	0,060	3,5	838	0,067	4,2	924	0,074	5,1			
		3,0	700	0,056	4,0	802	0,064	5,0	903	0,072	6,2	1006	0,080	7,6	1108	0,088	9,1			
		3,6	804	0,064	6,2	921	0,073	7,9	1038	0,083	9,8	1155	0,092	12,0	1272	0,101	14,3			
126	35	1,8	434	0,035	1,0	520	0,041	1,3	596	0,047	1,7	668	0,053	2,0	736	0,059	2,4	121	30	34
		2,4	603	0,048	2,4	695	0,055	3,0	783	0,062	3,8	872	0,069	4,6	960	0,076	5,4			
		3,0	733	0,058	4,3	840	0,067	5,5	946	0,075	6,8	1053	0,084	8,3	1160	0,092	9,9			
		3,6	846	0,067	6,8	969	0,077	8,7	1092	0,087	10,8	1215	0,097	13,1	1339	0,107	15,7			
144	40	1,8	457	0,036	1,1	543	0,043	1,4	621	0,049	1,8	693	0,055	2,2	764	0,061	2,6	128	32	36
		2,4	623	0,050	2,5	716	0,057	3,2	807	0,064	4,0	899	0,072	4,8	990	0,079	5,7			
		3,0	760	0,061	4,6	871	0,069	5,8	982	0,078	7,3	1093	0,087	8,8	1204	0,096	10,6			
		3,6	881	0,070	7,3	1009	0,080	9,3	1138	0,091	11,6	1266	0,101	14,2	1395	0,111	17,0			

Table 4. Flow-adjusted effect table. Cooling circuit Δt_w = 3° C (Water in-out).
For the red values, the flow is below the recommended minimum flow of 0.035 l/s at Δt_w = 3° C. Increase the flow to the recommended minimum flow.

We reserve the right to make changes

Supply air beam Professor

Heating effect, Professor

Nozzle pressure 60 Pa			Water															Air		
q_A (m³/h)	q_A (l/s)	Professor	Δt_{rw} = 20 K			Δt_{rw} = 25 K			Δt_{rw} = 30 K			Δt_{rw} = 35 K			Δt_{rw} = 40 K			Total pressure duct	Noise press level	Noise effect level
		L(m)	P(W)	q(l/s)	p(kPa)	P(W)	q(l/s)	p(kPa)	P(W)	q(l/s)	p(kPa)	P(W)	q(l/s)	p(kPa)	P(W)	q(l/s)	p(kPa)	Pa	dB(A)	dB(A)
36	10	1,2	266	0,006	0,0	350	0,008	0,0	446	0,011	0,0	557	0,013	0,1	684	0,016	0,1	62	<20	<24
		1,8	395	0,009	0,1	539	0,013	0,1	714	0,017	0,1	920	0,022	0,2	1147	0,027	0,3			
54	15	1,2	309	0,007	0,0	413	0,010	0,0	533	0,013	0,1	675	0,016	0,1	838	0,020	0,1	64	21	25
		1,8	491	0,012	0,1	687	0,016	0,1	926	0,022	0,2	1193	0,029	0,3	1462	0,035	0,4			
		2,4	669	0,016	0,2	963	0,023	0,3	1294	0,031	0,5	1616	0,039	0,7	1904	0,045	0,9			
		3,0	854	0,020	0,3	1232	0,029	0,6	1608	0,038	0,9	1942	0,046	1,3	2243	0,054	1,6			
72	20	1,2	337	0,008	0,0	453	0,011	0,0	591	0,014	0,1	753	0,018	0,1	939	0,022	0,1	67	24	28
		1,8	567	0,014	0,1	807	0,019	0,2	1091	0,026	0,3	1390	0,033	0,4	1673	0,040	0,5			
		2,4	802	0,019	0,2	1159	0,028	0,4	1526	0,036	0,6	1858	0,044	0,9	2157	0,052	1,2			
		3,0	1034	0,025	0,4	1466	0,035	0,8	1857	0,044	1,2	2201	0,053	1,6	2521	0,060	2,0			
		3,6	1256	0,030	0,7	1722	0,041	1,3	2127	0,051	1,8	2488	0,059	2,4	2849	0,068	3,0			
90	25	1,8	625	0,015	0,1	897	0,021	0,2	1210	0,029	0,3	1524	0,036	0,5	1811	0,043	0,6	71	26	30
		2,4	915	0,022	0,3	1315	0,031	0,5	1698	0,041	0,8	2034	0,049	1,1	2340	0,056	1,4			
		3,0	1192	0,028	0,6	1651	0,039	1,0	2048	0,049	1,4	2405	0,057	1,8	2755	0,066	2,3			
		3,6	1437	0,034	0,9	1916	0,046	1,5	2329	0,056	2,1	2724	0,065	2,8	3120	0,075	3,6			
108	30	1,8	670	0,016	0,1	965	0,023	0,2	1297	0,031	0,4	1618	0,039	0,5	1907	0,046	0,7	76	27	31
		2,4	1008	0,024	0,3	1434	0,034	0,6	1824	0,044	0,9	2168	0,052	1,2	2483	0,059	1,5			
		3,0	1323	0,032	0,7	1796	0,043	1,1	2201	0,053	1,6	2575	0,062	2,1	2949	0,070	2,6			
		3,6	1588	0,038	1,1	2073	0,050	1,7	2504	0,060	2,4	2929	0,070	3,2	3355	0,080	4,1			
126	35	1,8	709	0,017	0,1	1024	0,024	0,2	1369	0,033	0,4	1695	0,040	0,6	1985	0,047	0,7	81	28	32
		2,4	1082	0,026	0,4	1524	0,036	0,6	1917	0,046	1,0	2264	0,054	1,3	2593	0,062	1,6			
		3,0	1430	0,034	0,7	1908	0,046	1,2	2321	0,055	1,7	2714	0,065	2,3	3109	0,074	2,9			
		3,6	1711	0,041	1,2	2205	0,053	1,9	2654	0,063	2,7	3105	0,074	3,5	3556	0,085	4,5			
144	40	2,4	1142	0,027	0,4	1594	0,038	0,7	1989	0,048	1,0	2341	0,056	1,4	2682	0,064	1,7	88	30	34
		3,0	1515	0,036	0,8	1997	0,048	1,3	2419	0,058	1,8	2829	0,068	2,4	3240	0,077	3,1			
		3,6	1812	0,043	1,4	2312	0,055	2,1	2783	0,066	2,9	3255	0,078	3,9	3728	0,089	4,9			

Table 5. Flow-adjusted effect table. Heating circuit Δt_w = 10° C (Water in-out).

Supply air beam Professor

Heating effect, Professor

Nozzle pressure 80 Pa			Water															Air		
q_A (m³/h)	q_A (l/s)	Professor	Δt_{rw} = 20 K			Δt_{rw} = 25 K			Δt_{rw} = 30 K			Δt_{rw} = 35 K			Δt_{rw} = 40 K			Total pres-sure duct	Noise press level	Noise effect level
		L(m)	P(W)	q(l/s)	p(kPa)	P(W)	q(l/s)	p(kPa)	P(W)	q(l/s)	p(kPa)	P(W)	q(l/s)	p(kPa)	P(W)	q(l/s)	p(kPa)	Pa	dB(A)	dB(A)
36	10	1,2	280	0,007	0,0	371	0,009	0,0	475	0,011	0,0	595	0,014	0,1	734	0,018	0,1	82	<20	<24
		1,8	425	0,010	0,1	586	0,014	0,1	782	0,019	0,2	1009	0,024	0,2	1253	0,030	0,3			
54	15	1,2	324	0,008	0,0	435	0,010	0,0	564	0,013	0,1	717	0,017	0,1	892	0,021	0,1	84	22	26
		1,8	524	0,013	0,1	740	0,018	0,1	999	0,024	0,2	1282	0,031	0,3	1559	0,037	0,5			
		2,4	729	0,017	0,2	1053	0,025	0,4	1404	0,034	0,6	1732	0,041	0,8	2023	0,048	1,0			
72	20	1,2	353	0,008	0,0	477	0,011	0,0	625	0,015	0,1	800	0,019	0,1	998	0,024	0,1	87	25	29
		1,8	603	0,014	0,1	862	0,021	0,2	1165	0,028	0,3	1474	0,035	0,4	1760	0,042	0,6			
		2,4	866	0,021	0,3	1248	0,030	0,5	1626	0,039	0,7	1960	0,047	1,0	2262	0,054	1,3			
		3,0	1128	0,027	0,5	1578	0,038	0,9	1972	0,047	1,3	2323	0,056	1,7	2661	0,064	2,2			
		3,6	1374	0,033	0,9	1849	0,044	1,4	2257	0,054	2,0	2640	0,063	2,6	3024	0,072	3,4			
90	25	1,2	384	0,009	0,0	523	0,012	0,1	690	0,016	0,1	888	0,021	0,1	1107	0,026	0,2	91	27	31
		1,8	663	0,016	0,1	955	0,023	0,2	1284	0,031	0,3	1605	0,038	0,5	1893	0,045	0,7			
		2,4	982	0,023	0,3	1401	0,033	0,6	1789	0,043	0,8	2133	0,051	1,2	2443	0,058	1,5			
		3,0	1284	0,031	0,6	1753	0,042	1,1	2158	0,052	1,5	2524	0,060	2,0	2891	0,069	2,5			
		3,6	1548	0,037	1,0	2031	0,049	1,7	2457	0,059	2,3	2873	0,069	3,1	3291	0,079	3,9			
108	30	1,8	0	0,017	0,1	1026	0,025	0,2	1371	0,033	0,4	1697	0,041	0,6	1988	0,047	0,7	96	28	32
		2,4	1076	0,026	0,4	1517	0,036	0,6	1910	0,046	1,0	2256	0,054	1,3	2584	0,062	1,6			
		3,0	1413	0,034	0,7	1890	0,045	1,2	2301	0,055	1,7	2692	0,064	2,2	3083	0,074	2,9			
		3,6	1691	0,040	1,2	2184	0,052	1,9	2629	0,063	2,6	3075	0,073	3,5	3522	0,084	4,5			
126	35	1,8	753	0,018	0,1	1088	0,026	0,3	1445	0,035	0,4	1775	0,042	0,6	2066	0,049	0,8	101	29	33
		2,4	1151	0,027	0,4	1605	0,038	0,7	2000	0,048	1,0	2353	0,056	1,4	2695	0,064	1,7			
		3,0	1516	0,036	0,8	1998	0,048	1,3	2419	0,058	1,8	2830	0,068	2,4	3241	0,077	3,1			
		3,6	1807	0,043	1,4	2307	0,055	2,1	2777	0,066	2,9	3248	0,078	3,8	3721	0,089	4,9			
144	40	1,8	800	0,019	0,2	1156	0,028	0,3	1524	0,036	0,5	1855	0,044	0,6	2154	0,051	0,8	108	31	35
		2,4	1212	0,029	0,4	1673	0,040	0,8	2071	0,049	1,1	2431	0,058	1,5	2784	0,067	1,8			
		3,0	1598	0,038	0,9	2084	0,050	1,4	2517	0,060	2,0	2943	0,070	2,6	3371	0,081	3,4			
		3,6	1903	0,045	1,5	2413	0,058	2,3	2904	0,069	3,1	3397	0,081	4,2	3891	0,093	5,4			

Table 6. Flow-adjusted effect table. Heating circuit Δt_w = 10° C (Water in-out).

We reserve the right to make changes

Supply air beam Professor

Heating effect, Professor

Nozzle pressure 100 Pa			Water															Air		
q_A (m³/h)	q_A (l/s)	Professor	Δt_{rw} = 20 K			Δt_{rw} = 25 K			Δt_{rw} = 30 K			Δt_{rw} = 35 K			Δt_{rw} = 40 K			Total pres-sure duct	Noise press level	Noise effect level
		L(m)	P(W)	q(l/s)	p(kPa)	P(W)	q(l/s)	p(kPa)	P(W)	q(l/s)	p(kPa)	P(W)	q(l/s)	p(kPa)	P(W)	q(l/s)	p(kPa)	Pa	dB(A)	dB(A)
36	10	1,2	295	0,007	0,0	391	0,009	0,0	504	0,012	0,0	634	0,015	0,1	785	0,019	0,1	102	<20	<24
		1,8	460	0,011	0,1	639	0,015	0,1	857	0,020	0,2	1107	0,026	0,3	1366	0,033	0,4			
54	15	1,2	338	0,008	0,0	455	0,011	0,0	593	0,014	0,1	756	0,018	0,1	943	0,023	0,1	104	22	26
		1,8	560	0,013	0,1	795	0,019	0,2	1075	0,026	0,3	1372	0,033	0,4	1653	0,039	0,5			
		2,4	796	0,019	0,2	1150	0,027	0,4	1517	0,036	0,6	1848	0,044	0,9	2147	0,051	1,2			
72	20	1,2	367	0,009	0,0	498	0,012	0,0	654	0,016	0,1	839	0,020	0,1	1048	0,025	0,1	107	26	30
		1,8	639	0,015	0,1	918	0,022	0,2	1237	0,030	0,3	1553	0,037	0,5	1841	0,044	0,6			
		2,4	934	0,022	0,3	1339	0,032	0,5	1724	0,041	0,8	2061	0,049	1,1	2370	0,057	1,4			
		3,0	1227	0,029	0,6	1691	0,040	1,0	2089	0,050	1,4	2451	0,059	1,9	2807	0,067	2,4			
90	25	1,2	398	0,010	0,0	545	0,013	0,1	722	0,017	0,1	930	0,022	0,1	1159	0,028	0,2	111	28	32
		1,8	699	0,017	0,1	1009	0,024	0,2	1351	0,032	0,4	1676	0,040	0,5	1965	0,047	0,7			
		2,4	1049	0,025	0,3	1484	0,035	0,6	1876	0,045	0,9	2221	0,053	1,2	2544	0,061	1,6			
		3,0	1378	0,033	0,7	1854	0,044	1,2	2262	0,054	1,6	2646	0,063	2,2	3031	0,072	2,8			
		3,6	1659	0,040	1,2	2152	0,051	1,8	2590	0,062	2,6	3029	0,072	3,4	3470	0,083	4,3			
108	30	1,8	746	0,018	0,1	1079	0,026	0,3	1434	0,034	0,4	1763	0,042	0,6	2055	0,049	0,8	116	29	33
		2,4	1141	0,027	0,4	1593	0,038	0,7	1988	0,047	1,0	2340	0,056	1,4	2681	0,064	1,7			
		3,0	1500	0,036	0,8	1981	0,047	1,3	2400	0,057	1,8	2808	0,067	2,4	3216	0,077	3,1			
		3,6	1792	0,043	1,3	2291	0,055	2,1	2757	0,066	2,9	3225	0,077	3,8	3693	0,088	4,9			
126	35	1,8	789	0,019	0,2	1141	0,027	0,3	1506	0,036	0,5	1838	0,044	0,6	2137	0,051	0,8	121	30	34
		2,4	1214	0,029	0,4	1676	0,040	0,8	2073	0,050	1,1	2434	0,058	1,5	2787	0,067	1,9			
		3,0	1597	0,038	0,9	2082	0,050	1,4	2514	0,060	2,0	2941	0,070	2,6	3368	0,080	3,4			
		3,6	1900	0,045	1,5	2410	0,058	2,2	2901	0,069	3,1	3392	0,081	4,2	3886	0,093	5,3			
144	40	1,8	838	0,020	0,2	1210	0,029	0,3	1584	0,038	0,5	1917	0,046	0,7	2217	0,053	0,9	128	32	36
		2,4	1272	0,030	0,5	1740	0,042	0,8	2145	0,051	1,2	2509	0,060	1,5	2874	0,069	2,0			
		3,0	1674	0,040	1,0	2167	0,052	1,5	2608	0,062	2,1	3051	0,073	2,8	3494	0,083	3,6			
		3,6	1989	0,048	1,6	2512	0,060	2,4	3023	0,072	3,4	3536	0,084	4,5	4050	0,097	5,8			

Table 7. Flow-adjusted effect table. Heating circuit Δt_w = 10° C (Water in-out).

Sound data

Internal sound dampening ΔL

Hz	63	125	250	500	1000	2000	4000	8000
dB	20	20	10	10	10	12	15	20

Table 8. Professor's internal sound dampening.

Supply air beam Professor

Couplings & connections

Professor is supplied in lengths from 1.2 m to 3.6 m in steps of 0.1 m. The connection size is 15 mm for the water and for the air 100 mm.

Professor is available with a large number of coupling options. This is how to find the designation for the coupling option you require for the Professor:

Step 1.
Indicate the position of the ventilation connection.

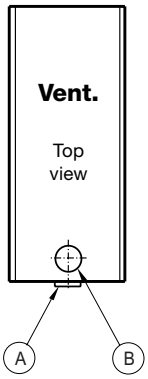

Figure 1. Coupling and connection options

Step 2.
Indicate the position of the pipe connection.

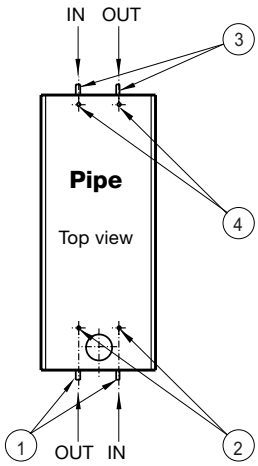

Feed is always the connection on the right, when looking at the pipes

Examples of designations

Below are examples of common coupling options: Type A1 has a horizontal air connection and a horizontal pipe connection at the same end of the beam.

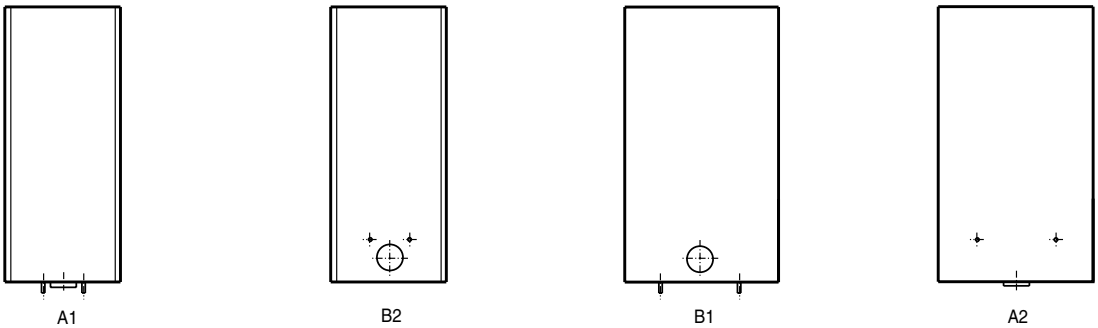

Figure 2. Professor's most common coupling options A1, A2, B1 and B2.

We reserve the right to make changes

Supply air beam Professor

Length, m

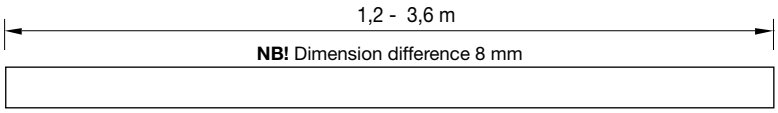

Dimensions, mm Professor

I, F 45

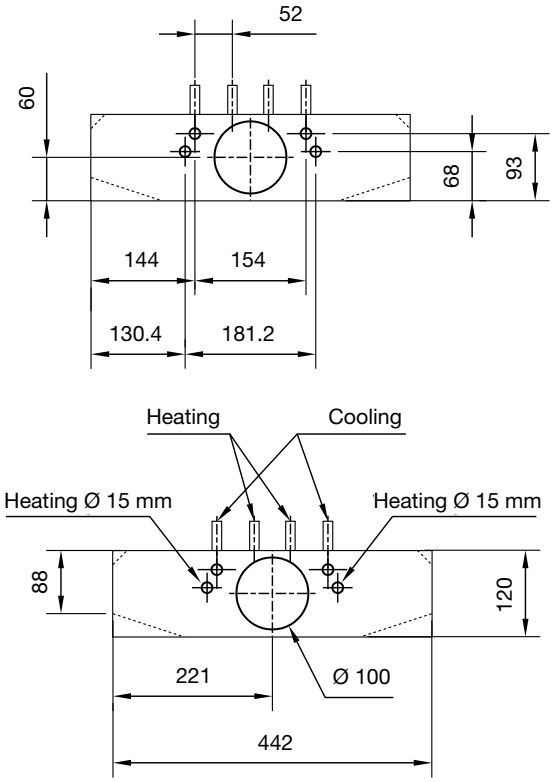

I, F 60

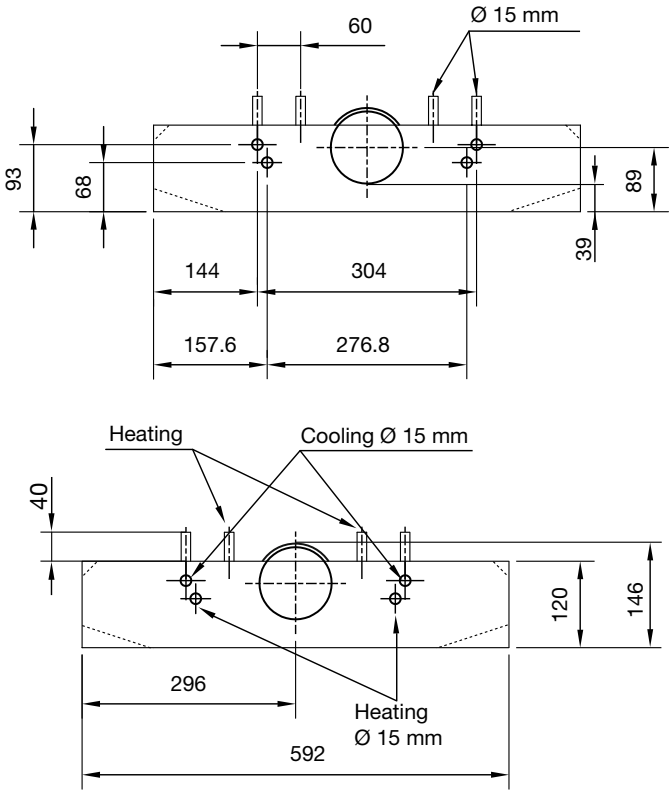

Figure 3. Professor I, F 45 dimensions (low connection).

Figure 4. Professor I, F 60 dimensions (high connection).

Notice! All Professor models can be delivered either with, low or high air connection.

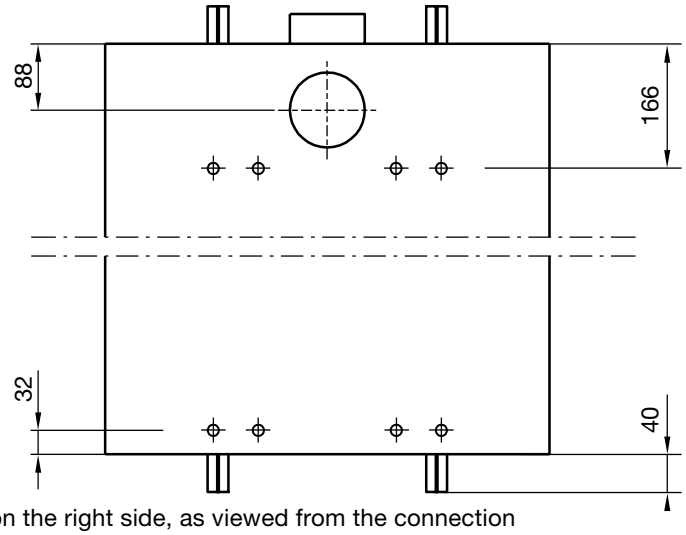

Note. The coolant's feed is on the right side, as viewed from the connection

Figure 5. Professor F 45, F 60, I 45, I 60

Supply air beam Professor

Material data

Type	Professor F 45, I 45	Professor F 60, I 60
Weight, kg/m	11.5	12.5
Water content, l/m	0.65	0.65
Copper pipes, connection	15	15
Copper pipes, battery	13.7	13.7
Copper pipes, quality	SS5015, semi-rigid	SS5015, semi-rigid
Pressure class	PN10	PN10

Table 9. Professor F 45 and I 60, material data.

Installation

Installation examples

Professor I 60 is mounted recessed in a suspended ceiling. Professor F is usually mounted directly on to the ceiling or suspended from it.

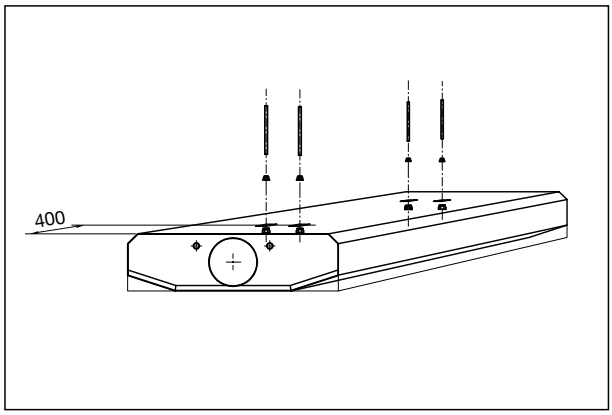

Picture 6. Professor's installation principle.

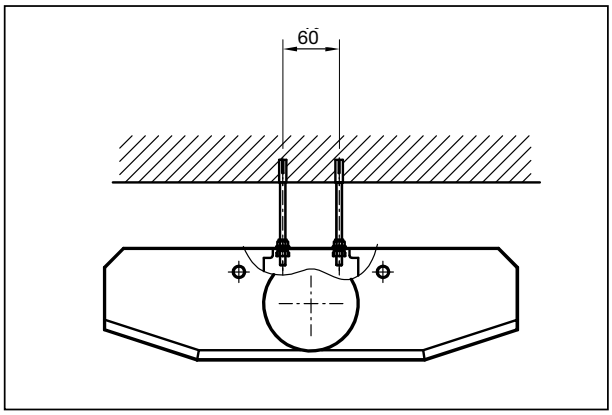

Picture 7. Professor F 45, mounted directly on to a ceiling, with the option to install subsequently a suspended ceiling where the product will be totally integrated.

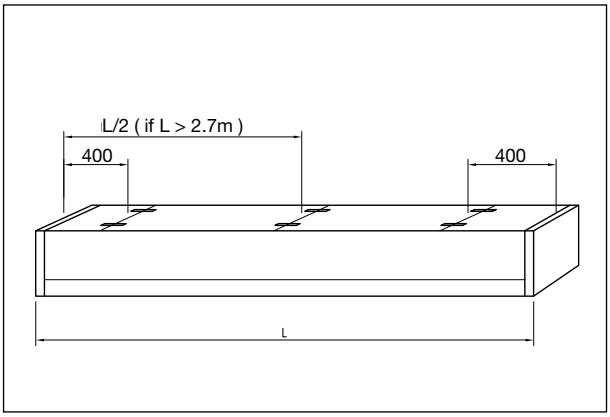

Picture 8. Position of the suspension points for Professor I 60.

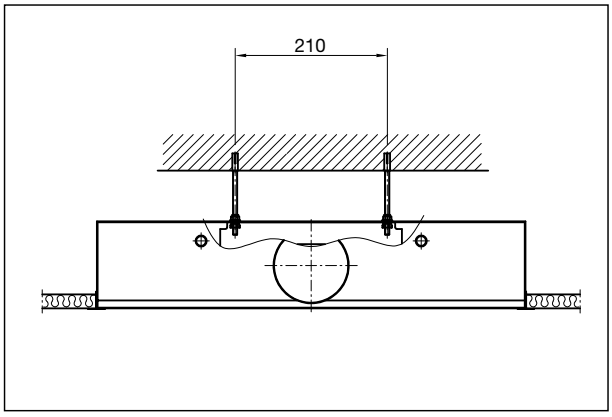

Picture 9. Professor I 60, recess mounted in a suspended ceiling. For lists see special dimensions, page 125

We reserve the right to make changes

Supply air beam Professor

Professor CLIP - IN

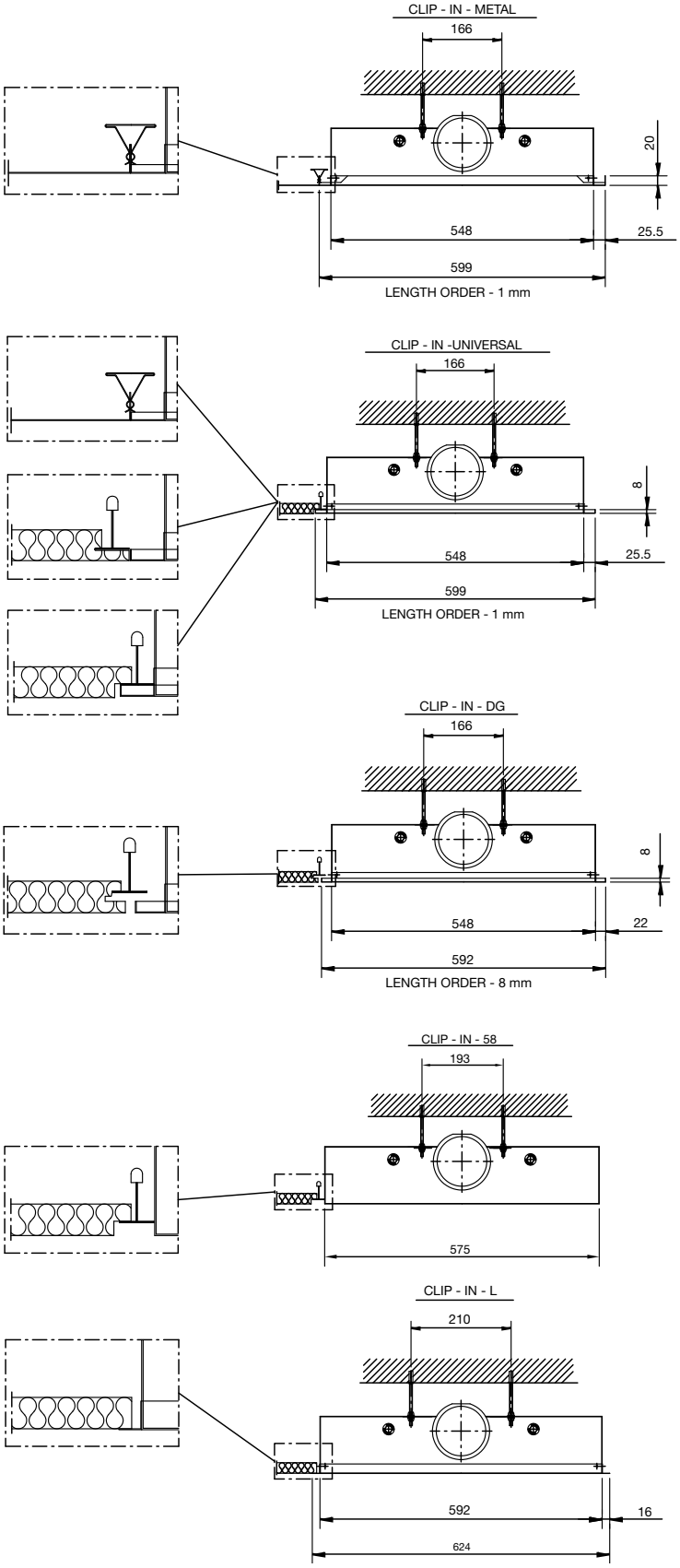

Figure 6. Clip-in for adapting to different types of suspended ceilings.

Supply air beam Professor

1
2
3
4
5
6
7
8
9
10
11
12
13
14
15
16
17
18
19

Distribution diagrams, Professor

The measurements are performed with cooled air supply (Δt room air – supply air) of 5° C and cooling in the water circuit (Δt room air – average water temperature) of 8° C. All heat supplied through the walls (the V test method).

For distribution patterns, where the nozzles have an angle of 30° C, the short ends of the beams should not be closer than 1.2 m from each other, if the air velocities given below are to apply.

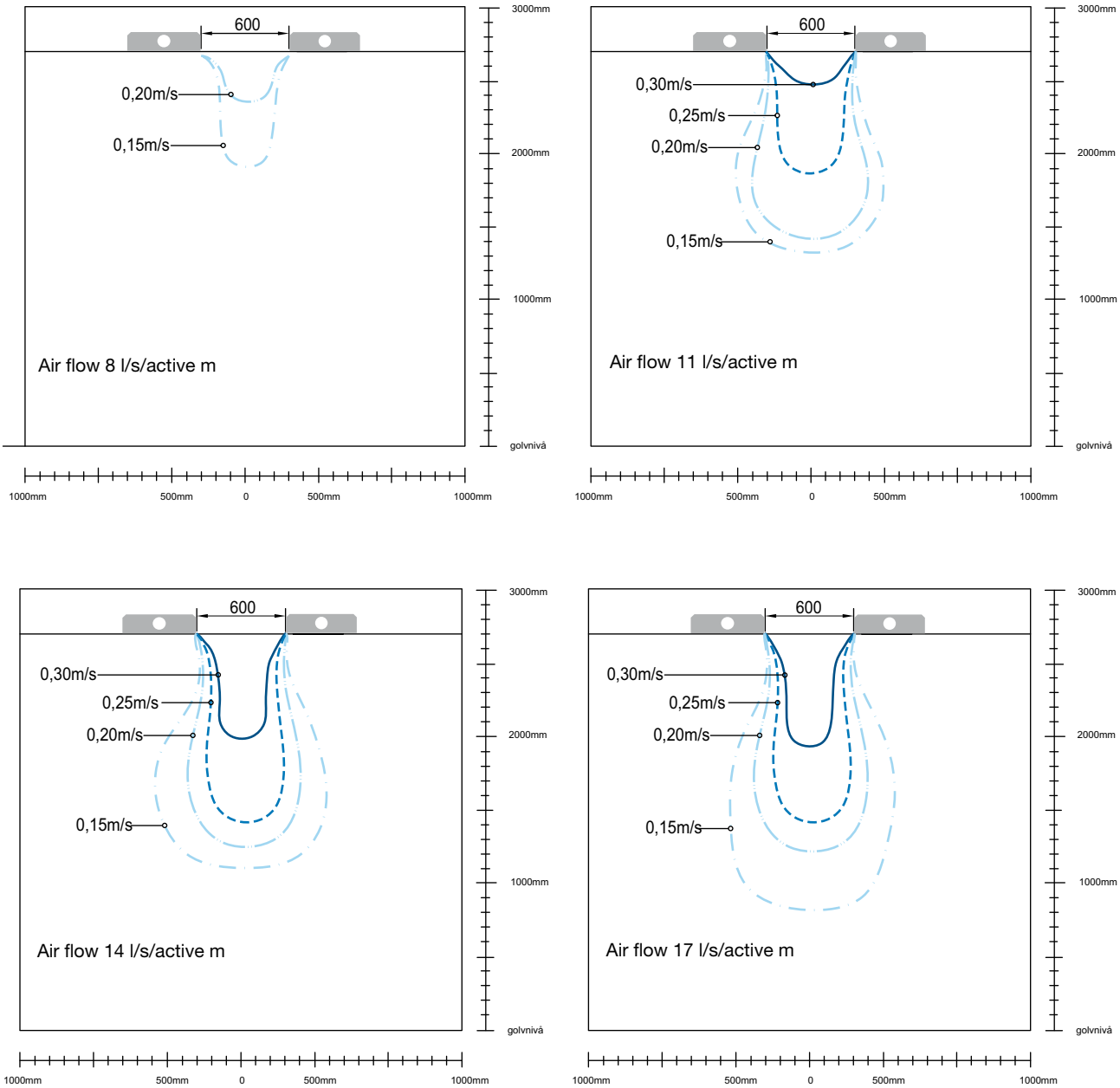

Figure 7-10. Air velocities between supply air beams at a separation of 600 mm. Standard distribution profile (nozzles at a 30° angle). Nozzle pressure of 60 Pa.

We reserve the right to make changes

Supply air beam Professor

Distribution diagrams, Professor

The measurements are performed with cooled air supply (Δt room air – supply air) of 5° C and cooling in the water circuit (Δt – room air – average water temperature) of 8° C. All heat supplied through the walls (the V test method).

For distribution patterns, where the nozzles have an angle of 30° C, the short ends of the beams should not be closer than 1.2 m from each other, if the air velocities given below are to apply.

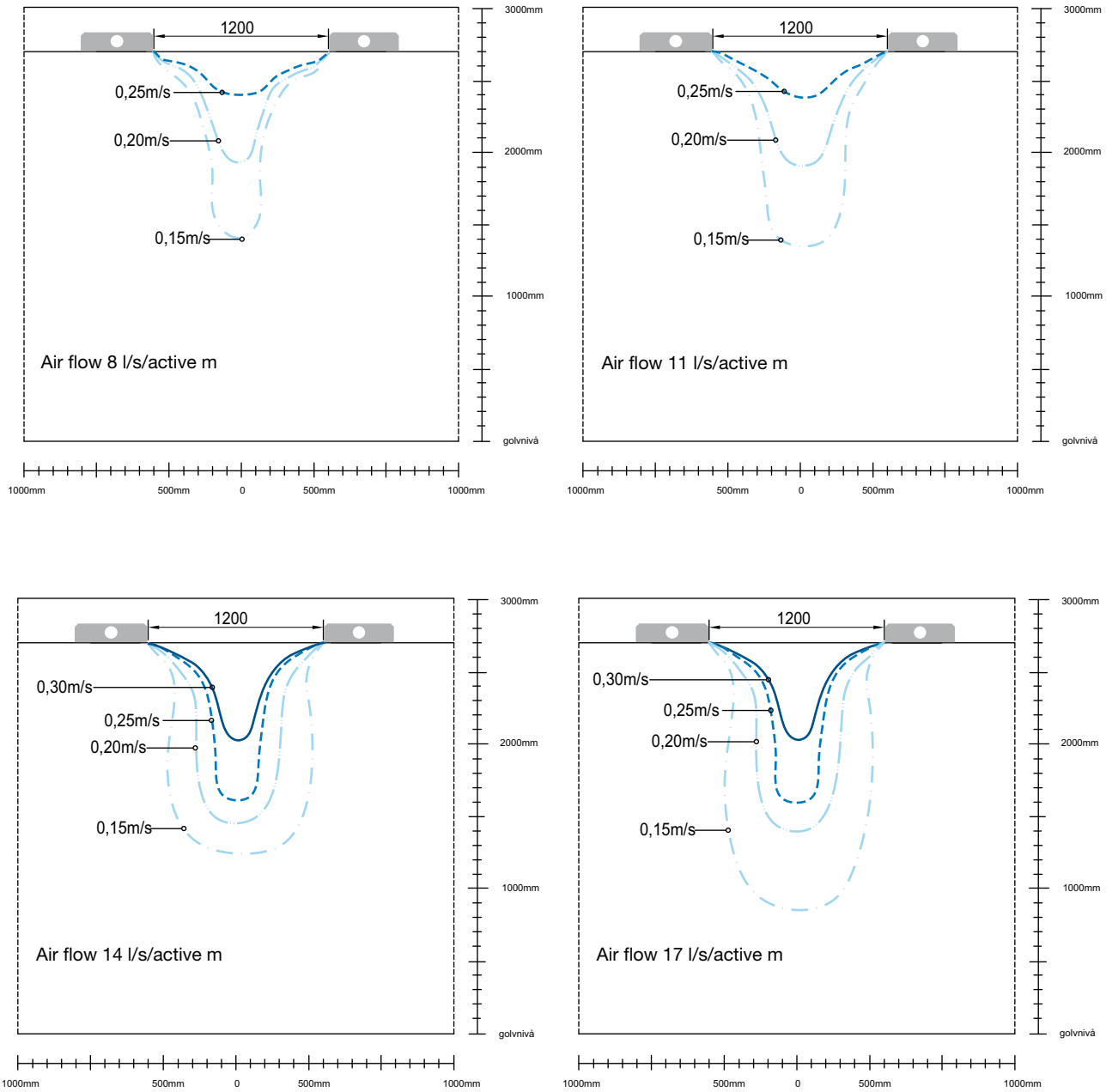

Figure 11-14. Air velocities, between supply air beams at a separation of 1200 mm. Standard distribution profile (nozzles at a 30° angle). Nozzle pressure of 60 Pa.

Supply air beam Professor

1
2
3
4
5
6
7
8
9
10
11
12
13
14
15
16
17
18
19

Distribution diagrams, Professor

The measurements are conducted with cooled air supply (Δt room air – supply air) of 5° C and cooling in the water circuit (Δt room air – average water temperature) of 8° C. All heat supplied through the walls (the V test method).

For distribution patterns where the nozzles have an angle of 30° C, the short ends of the beams should not be closer than 1.2 m from each other if the air velocities given below are to apply.

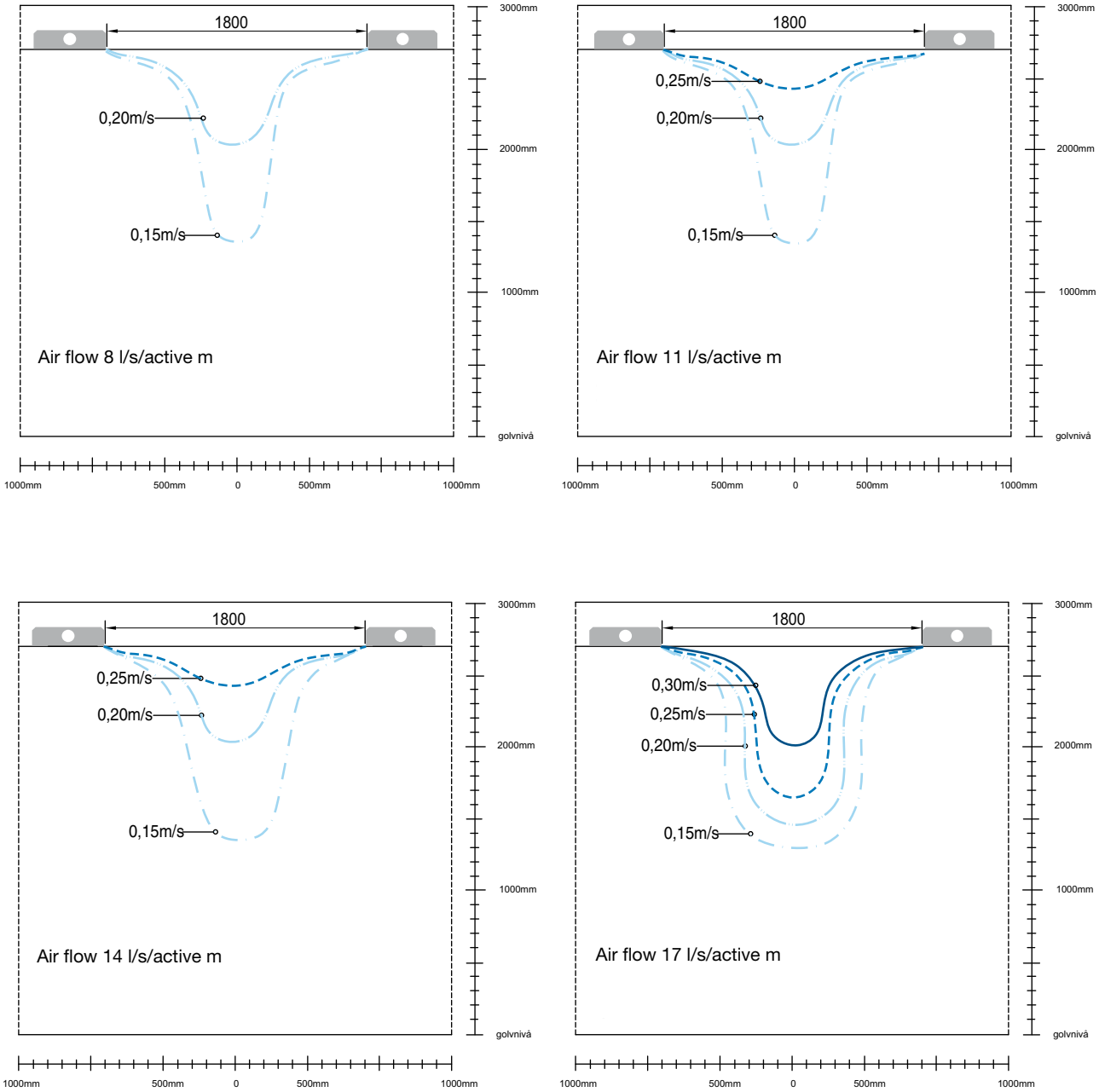

Figure 15-18. Air velocities between supply air beams at a separation of 1800 mm. Standard distribution profile (nozzles at a 30° angle). Nozzle pressure of 60 Pa.

We reserve the right to make changes

Supply air beam Professor

Distribution diagrams, Professor

The measurements are performed with cooled air supply (Δt room air – supply air) of 5° C and cooling in the water circuit (Δt room air – average water temperature) of 8.5° C. All heat supplied through the walls (the V test method).

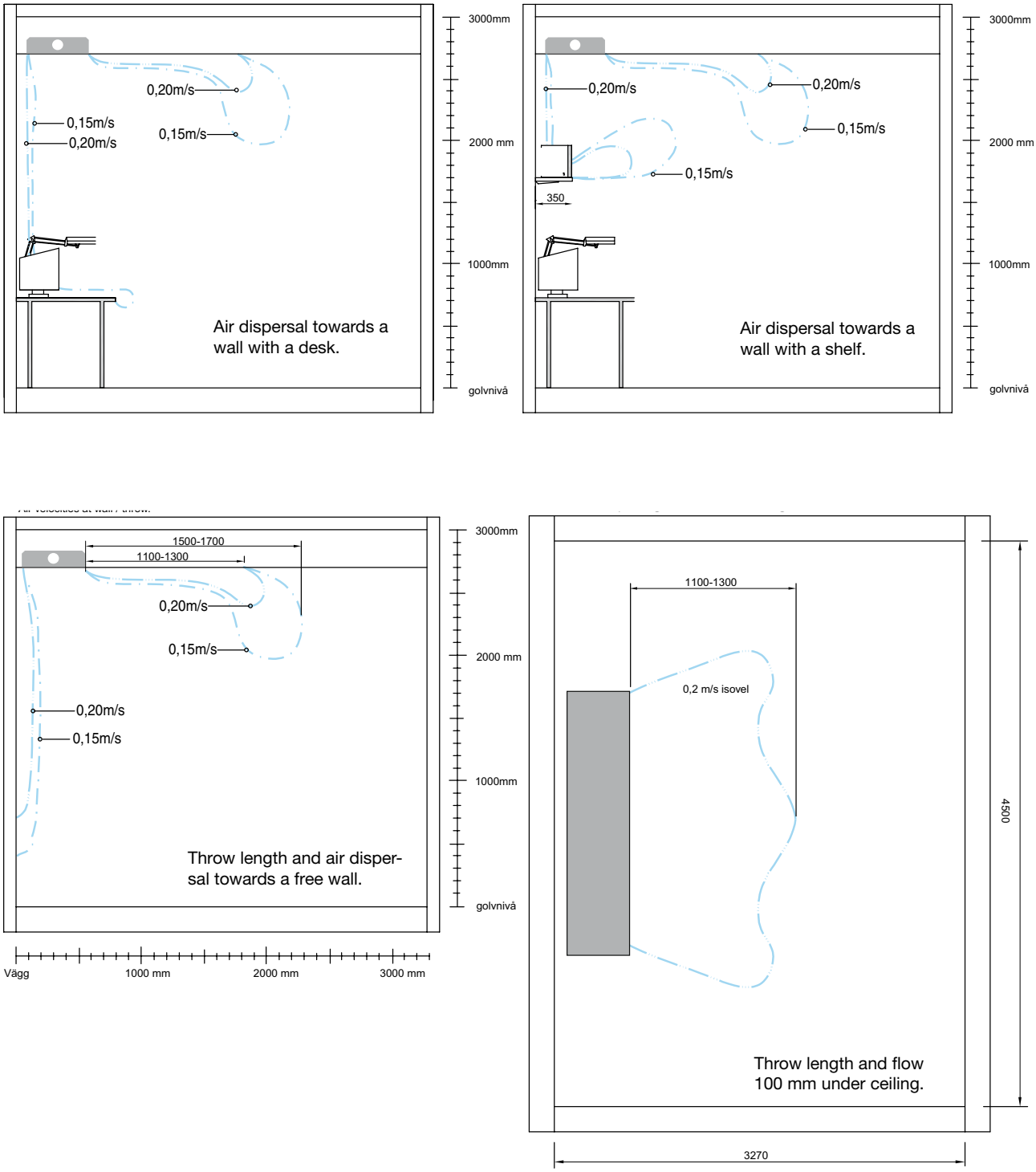

Figure 19-22. Air velocities below the supply air beam, where the air flow is 8 l/s per active metre. Standard distribution profile (nozzles at a 30° angle). Nozzle pressure of 60 Pa.

Supply air beam Professor

1
2
3
4
5
6
7
8
9
10
11
12
13
14
15
16
17
18
19

Distribution diagrams, Professor

The measurements are conducted with cooled air supply (Δt room air – supply air) of 5° C and cooling in the water circuit (Δt room air – average water temperature) of 8° C. All heat supplied through the walls (the V test method).

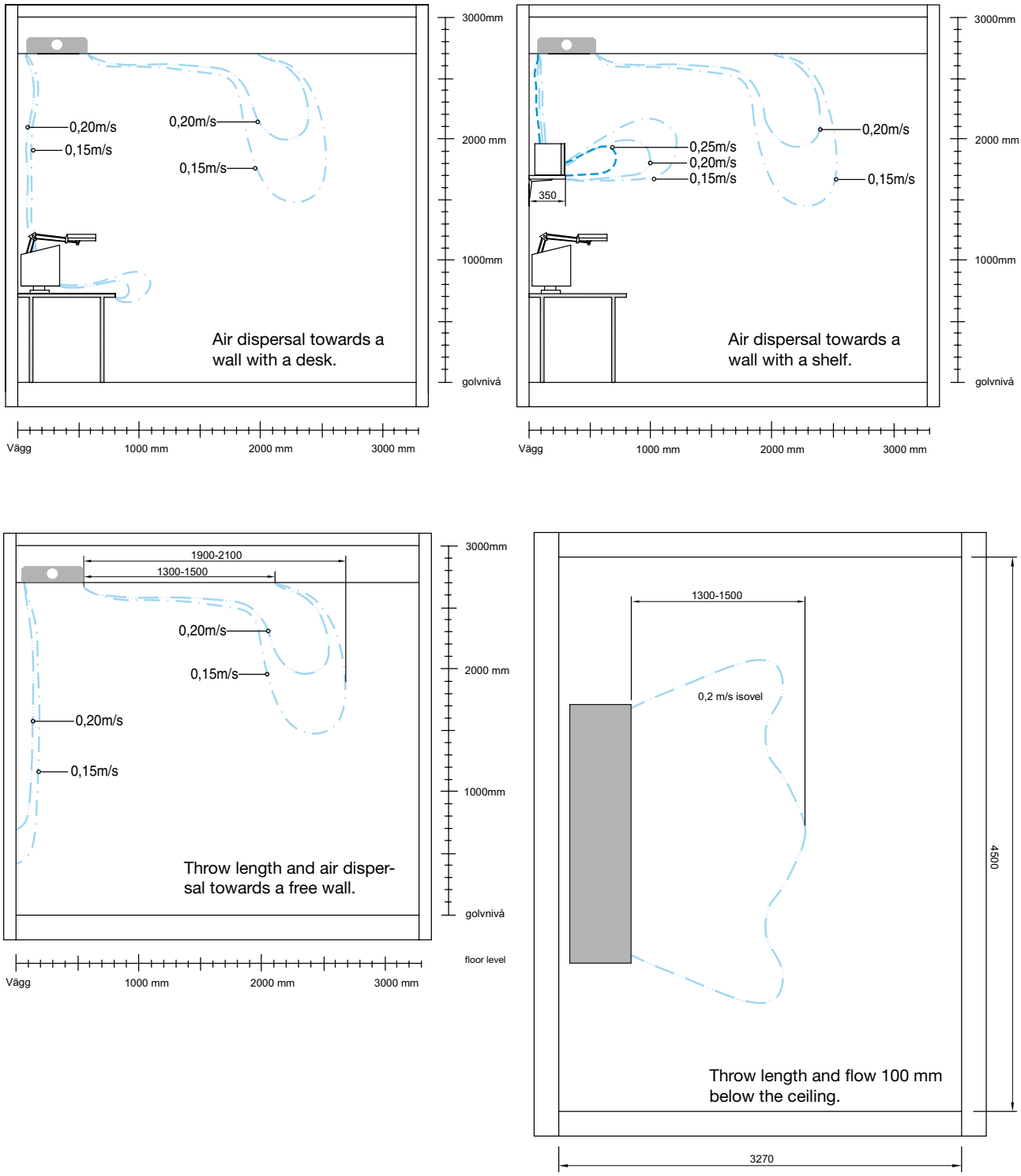

Figure 23-26. Air velocities below a supply air beam where the air flow is 11 l/s per active metre. Standard distribution profile (nozzles at a 30° angle). Nozzle pressure of 60 Pa.

We reserve the right to make changes

Supply air beam Professor

Distribution diagrams, Professor

The measurements are conducted with cooled air supply (Δt room air – supply air) of 5° C and cooling in the water circuit (Δt room air – average water temperature) of 8° C. All heat supplied through the walls (the V test method).

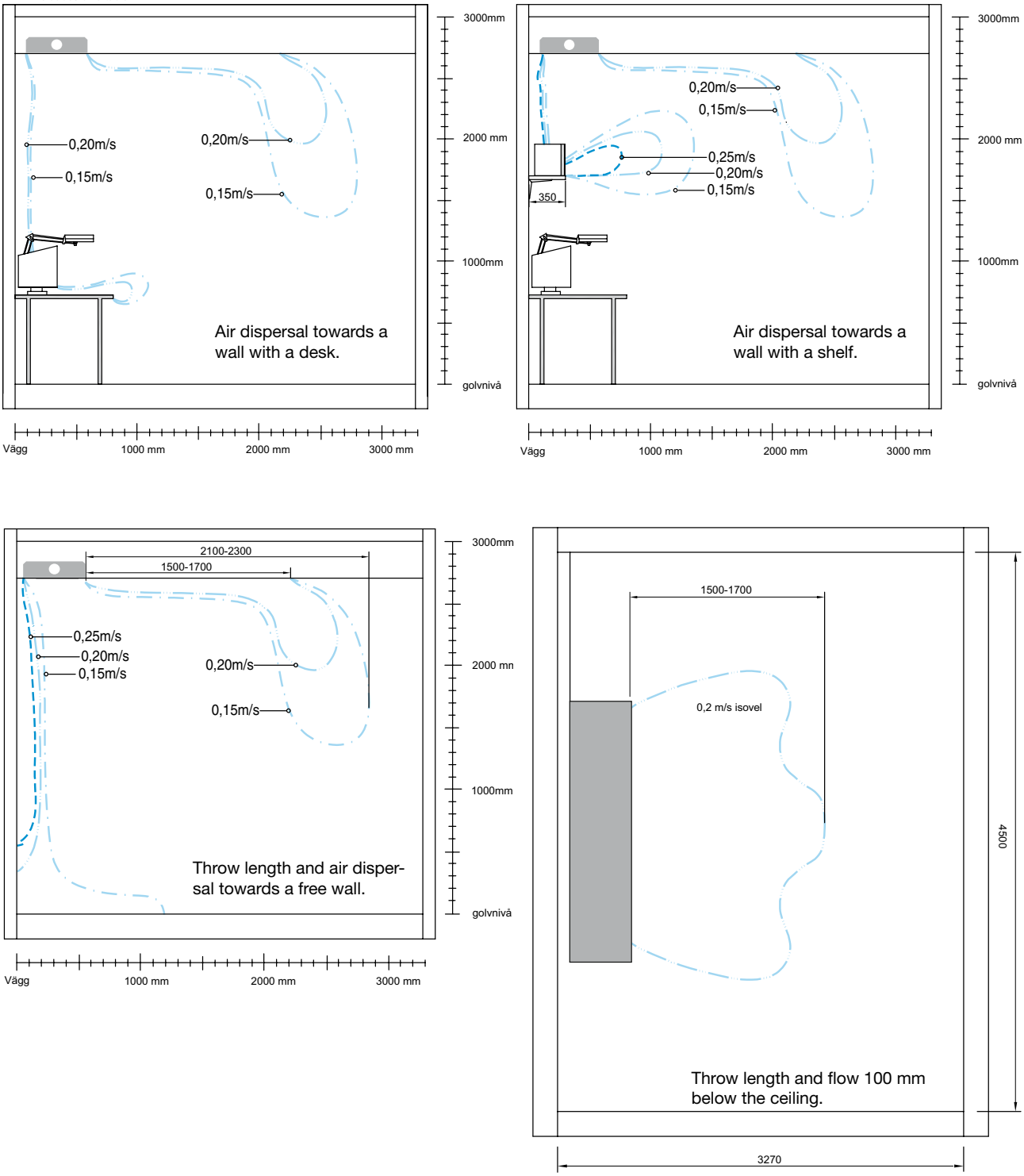

Figure 27-30. Air velocities below a supply air beam where the air flow is 14 l/s per active metre. Standard distribution profile (nozzles at a 30° angle). Nozzle pressure of 60 Pa.

Supply air beam Professor

1
2
3
4
5
6
7
8
9
10
11
12
13
14
15
16
17
18
19

Distribution diagrams, Professor

The measurements are performed with cooled air supply (Δt room air – supply air) of 5 °C C and cooling in the water circuit (Δt room air – average water temperature) of 8.5° C. All heat supplied through the walls (the V test method).

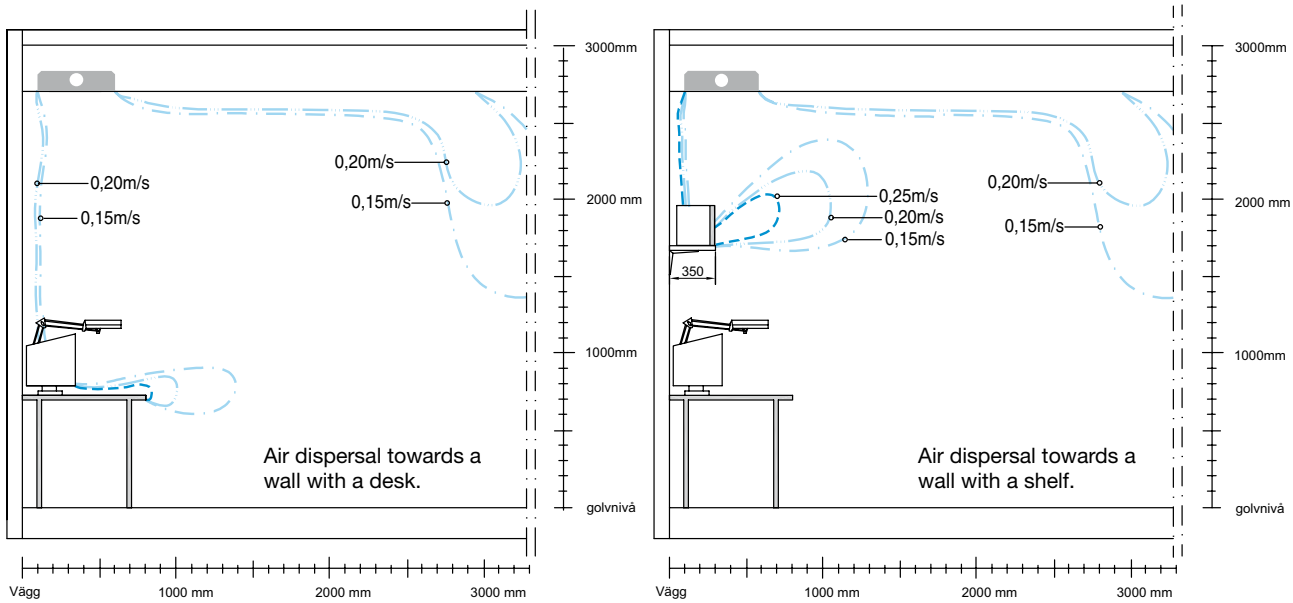

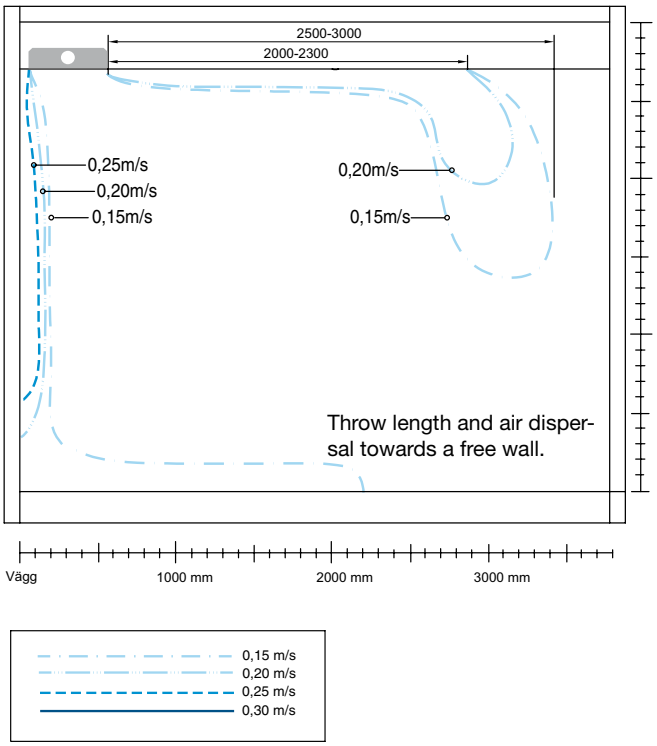

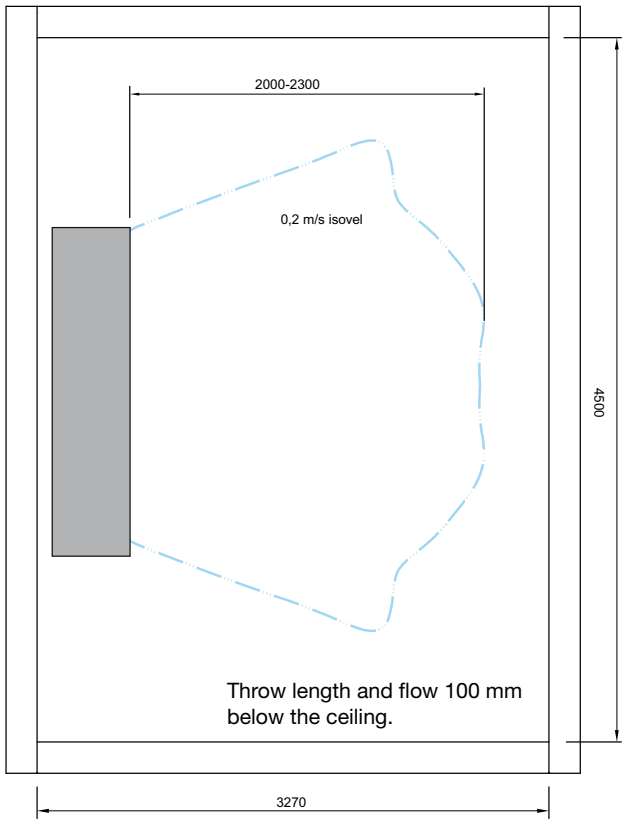

Figure 31-34. Air velocities below s supply air beam, where the air flow is 17 l/s per active metre. Standard distribution profile (nozzles at a 30° angle). Nozzle pressure 60 Pa.

We reserve the right to make changes

Supply air beam Professor

Pressure drop in water circuit, cooling

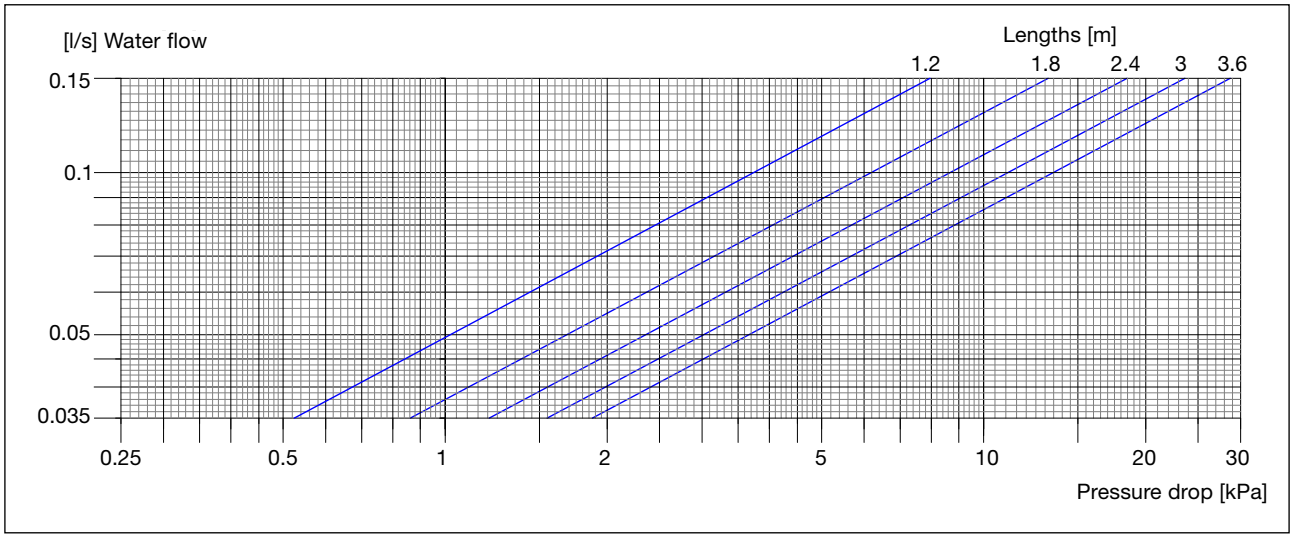

Diagram 4. Pressure drop in water circuit, cooling.

$q_w = P / (C_p \times \Delta t)$

q_w = water flow [l/s]
P = effect [W]
C_p= specific heat capacity [J/(kg·K)]
Δt = temperature difference in the water circuit in/out [K]

Example:

Professor 2.4 m, which provides an output of 603 W
$\Delta t = 3$ K
$q_w = 603 / (4200 \times 3) = 0.048$ l/s
The pressure drop in the water circuit in diagram 4 is read off as 2.2 kPa.

Pressure drop in water circuit, heating

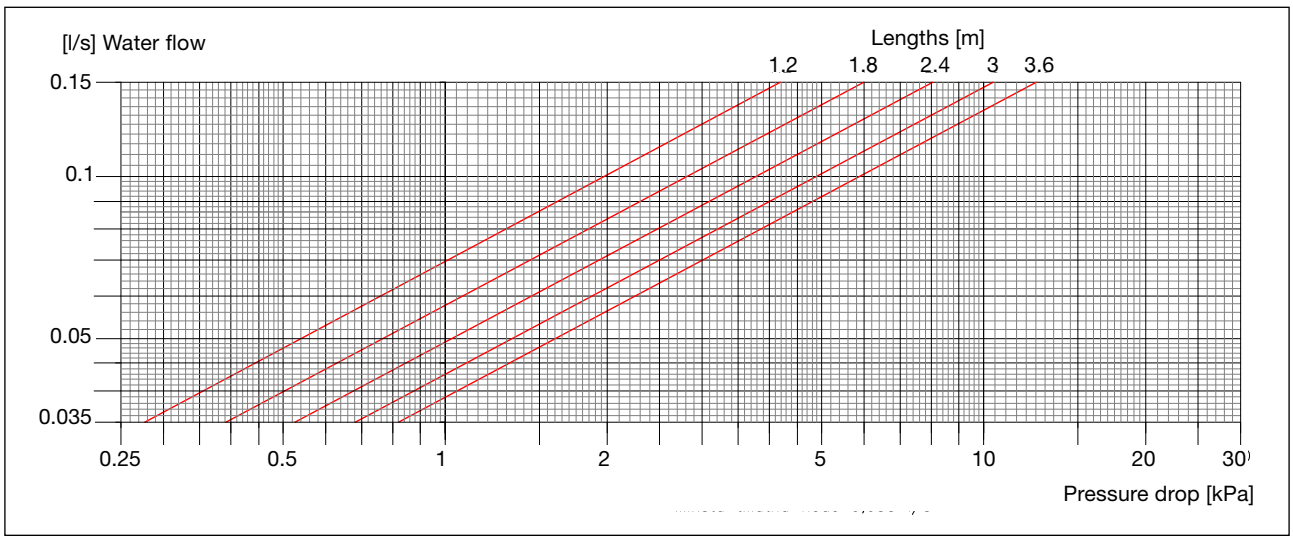

Diagram 5. Pressure drop in water circuit, heating.

$q_w = P / (C_p \times \Delta t)$

q_w = water flow [l/s]
P = effect [W]
Cp= specific heat capacity [J/(kg·K)]
Δt = temperature difference in the water circuit in/out [K]

Example:

Professor 2.4 m, which provides an output of 1526 W
$\Delta t = 10$ K
$q_w = 1526 / (4200 \times 10) = 0.036$ l/s
The pressure drop in the water circuit in diagram 5 is read off as 0.6 kPa.

Supply air beam Professor

Control

Lindab offers control equipment that is very simple to use. To avoid the heating and cooling being activated at the same time, the system is controlled sequentially (Regula Combi). It is also possible to control only the heating or the cooling (Regula Mono). For the technical data, refer to the chapter Regula.

Colour

As standard, Professor is powder-coated in white, RAL 9010, gloss value 30. Other colours can be ordered specially.

Designations

Product/Version:	Professor F or I
Width, [cm]:	45 or 60
Connection diam. water, [mm]:	15
Connection diam. air, [mm]:	100
Coupling options:	Air: A, B Water: 1, 2, 3, 4
Length, [m]:	Length in metres
Air quantity, [l/s]:	Must always be specified
Nozzle pressure, [Pa]:	Must always be specified
Distribution profile:	Standard (30°) Medium (16°) Long (0°)
Plus features:	See page 112

Programme text

Supply air beams from Lindab	**Qty**
Product:	
Professor F-45-15-100-A1-1.8 m	40
Air quantity:	15 l/s
Nozzle pressure:	60 Pa
Distribution profile:	Medium (16°)
Plus features:	
Drypac	
Lighting	
Regula Combi	
Regula Secura	
Cooling control valve	
Cooling actuator	
Product:	
Professor I-60-15-100-B2-2.4 m	20
Air quantity:	20 l/s
Nozzle pressure:	60 Pa
Distribution profile:	Standard (30°)
Plus features:	
Drypac	
Heating	
Regula	
Cooling control valve	
Cooling actuator	
Heating control valve	
Heating actuator	
Accessories:	
Regula Combi:	20

We reserve the right to make changes

Supply air beam

Pilot

Contact, Overview, Index	1
Guideline heating and cooling	2
Plexus	3
Professor	4
Pilot	5
Architect	6
Polaris I & S	7
Plafond	8
Podium	9
Celo	10
Cabinett	11
Capella	12
Carat	13
Fasadium	14
Atrium H & C /Loggia	15
Regula	16
Drypac™	17
Lighting	18
TEKNOsim	19

© 05.2009 Lindab Ventilation A/S. All forms of reproduction without written permission are forbidden. Lindab® is the registered trademark of Lindab AB.
Lindab's products, systems, product and product group designations are protected by intellectual property rights (IPR).

Supply air beam

Pilot

Use

Lindab's supply air beam Pilot can be used for cooling, heating and ventilation. Valves, actuators, Regula Secura, Regula Combi/Mono and Regula Connect can all be built into Pilot.

Installation

Pilot I-60 is installed as an integral part of a suspended ceiling, where the beam is mounted on a standard T support.

Pilot X-60 is suitable for installation in other types of suspended ceilings.

Worth noting

Pilot employs a unique patented Jet Gap that allows airflows, air pressures and distribution patterns to be adjusted.

The distribution pattern is fan-shaped in all positions, which results in an air velocity in the living area that is half that of a linear distribution pattern. Lindab's supply air beams are Eurovent-certified and tested according to EN-15116, EN-14518.

Key figures

Length:	1.8 m, 2.4 m and 3.0 m
Width:	592 mm (I-60) and 599 mm (X-60)
Height:	182 mm
Capacity:	Cooling effect of up to 2130 W Air quantity of up to 65 l/s

Supply air beam

Pilot

Function

Optimum function

Pilot is based on the induction principle. Ventilation air is released through a gap into a dispersal zone, thereby creating a low static pressure. The low pressure causes the warm air from the room to be sucked into the ventilation air through the battery. The volume of the warm indoor air is 4 to 5 times that of the ventilation air. The air is cooled as it passes through the battery, which consists of aluminium ribs with copper pipes filled with cold running water. The heat of the room is absorbed through the aluminium ribs and then transferred through the copper pipe to the water circuit and goes further to a central cooling unit.

The gap opening can be adjusted, with different settings, by four regulating screws. Changing the settings creates new air pressures and airflows. The air distribution can also be adjusted, to achieve different amounts of air on both sides of the beam, or an asymmetrical distribution pattern along one side of the beam. The technology is unique and patented, and we call it Jet Gap technology.

The gap opening is designed to guarantee the Coanda effect and a fan-shaped distribution pattern. The adherence of the air to the beam already occurs at the gap opening; then, due to the Coanda effect, the air follows the side of the beam towards to the ceiling.

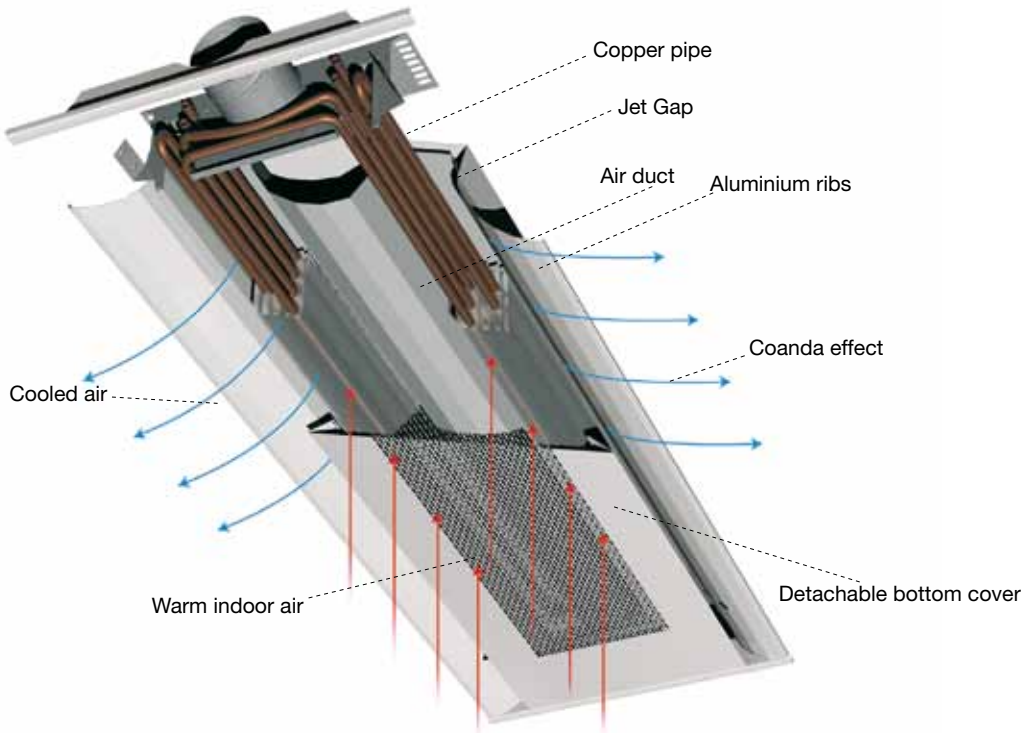

Picture 1. Pilot is based on the induction principle.

We reserve the right to make changes

Supply air beam

Pilot

Hygiene

Everything is accessible for service

Pilot's bottom cover is simple to lower or remove. The bottom cover is kept in place by four cotter pins. If two of the cotter pins, on one of the long sides of the bottom cover are removed, the bottom cover will open and hang from the other two pins. When the bottom cover is lowered or removed, both batteries are accessible from below (see picture 2). The batteries are accessible from all three sides where the air passes.

The product's air duct can be cleaned or inspected through the cleaning hatch, located on the one end of the product. The cleaning hatch is provided with a handle.

Construction

Pilot is flexible

Pilot is developed and designed to achieve a high degree of flexibility. The flexibility allows air distributions, airflows and air pressures to be changed simply for different situations. Pilot is a supply air beam that is compact in design, yet has optimum performance and maximum accessibility for cleaning and inspection. Where the beam is equipped with built-in valves and actuators, these are also accessible from below for adjustment and maintenance.

It is easy to set the initial settings and adjust the air distribution, airflow and air pressure by using the four regulating screws.

The water pipes are made of copper. Nevertheless, the water should be oxygen-free to prevent corrosion.

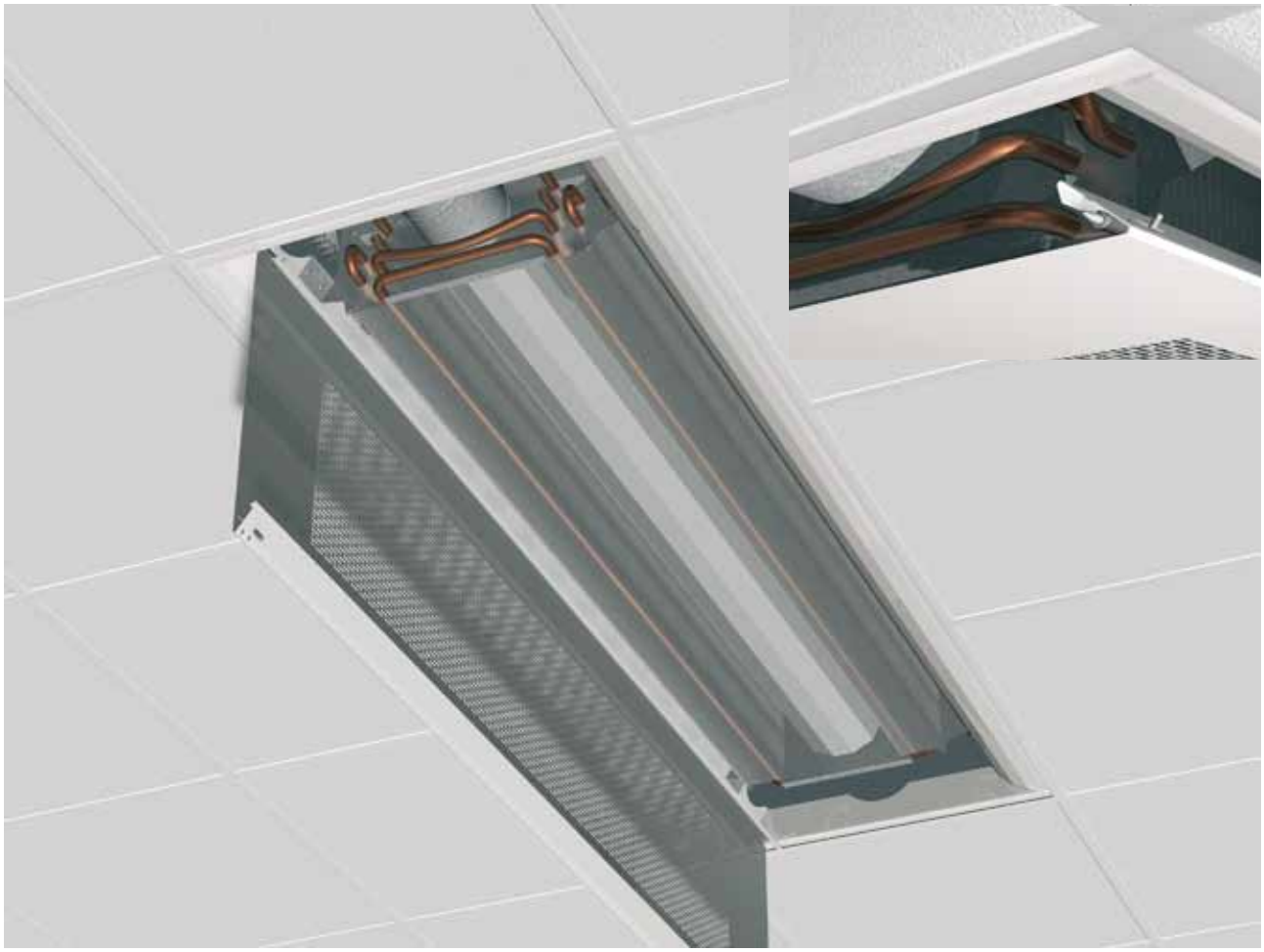

Picture 2. When the bottom cover is lowered or removed, both batteries are accessible from below. Lowered: Cotter pins for locking the underside.

1 2 3 4 5 6 7 8 9 10 11 12 13 14 15 16 17 18 19

Supply air beam

Pilot

Initial settings

Simple to adjust

Pilot is a flexible product, in which air distribution, airflow and air pressure can be simply preset, and also adjusted later, in order to accommodate changes in the room. Initial presets and later adjustments are done by altering the position of the four regulating screws. An Allen key is used to adjust the regulating screws, and the adjustments can be made even when the bottom cover is in place (see picture 3). The simple initial adjustment makes it possible to select a product early in a project and include it in the drawings, even if not all of the input data is available.

Example: A number of Pilot beams are installed in an open-plan office. A separate office is to be fitted into the room. If the climate is to be the optimum, the air quantity and air distribution need to be adjusted on the Pilot beam that will be built into the new room (see picture 5).

An Allen key is used to adjust the four regulating screws, to achieve the desired result. These adjustments have increased the total amount of air on this beam, compared to previously, and have changed the air distribution.

If the air has to be directed in a specific direction, it is also possible to adjust an asymmetrical distribution pattern simply (see picture 4).

For more information about Pilot's initial settings, refer to the MIS guide.

Picture 4. The regulating screws are adjusted with an Allen key; adjustments can be made even when the bottom cover is in place.

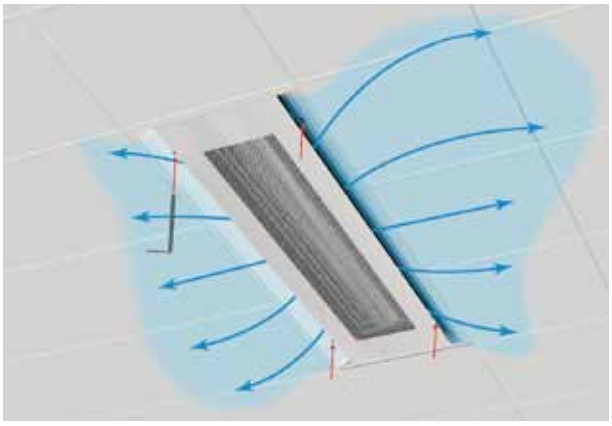

Picture 3. An asymmetrical distribution pattern is achieved by different settings of the regulating screws.

Picture 5. A separate office is to be fitted into the room. If the climate is to be the optimum, the air quantity and air distribution need to be adjusted for the Pilot beam that will be built into the new room.

We reserve the right to make changes

Supply air beam

Pilot

Data

Versions

Pilot I-60 is installed as an integral part of a suspended ceiling, where the beam is fitted on top of a standard T support. Pilot X-60 is suitable for installation in other types of suspended ceilings.

Lengths: Pilot is available in lengths of 1.8 m, 2.4 m and 3.0 m

Water connection: Pilot is supplied as standard with horizontal pipe outlets. The water connections for Pilot 1.8 m and 2.4 m are made of 12 mm copper pipes. For Pilot 3.0 m, the connection pipes can be either 12 or 15 mm.

Air connection: Pilot is supplied with Lindab's inlet pipes with a standard sleeve size of Ø125.

Design: Pilot is supplied as standard with a Slot perforation, with 50% open area.

Surface treatment: Pilot is supplied as standard in enamelled sheet metal, colour white, RAL 9010.

Plus features

Factory preinstalled.

Heating: The heating function is supplied as part of the standard package. Couplings and connection pipes are, however, available as a plus feature.

Crosstalk protection: Cross-noise protection can be installed in either end of Pilot.

Integrated valve and actuator: A control valve, with variable Kv value, and an actuator can be pre-installed in the product.

Integrated control centre: It is possible to have Lindab's room control centre, Regula, pre-installed in the product. The control panel is fully accessible through the bottom cover. Refer to the chapter Regula.

Regula Secura: There is the option to have Lindab's Regula Secura condensation guard installed in the product.

Regula Connect: The product can be equipped with the Regula Connect connection card. Refer to the chapter Regula.

Air vent: Air vent on the return side of the connection pipe.

Factory settings: Presetting of pressure (Pa) and air flow (l/s).

Accessories

Delivered separately.

Control: Refer to the chapter Regula.

Suspension components: 4 threaded rods (60 to 100 cm) are available for Pilot 1.8 m and 2.4 m and 6 threaded rods (60 to 100 cm) for Pilot 3.0 m.

Presetting handle: Handle for presetting the valves (FVV-10).

Allen key: Key for adjusting the regulating screws.

Tectite tool: Tool for dismantling Tectite couplings.

Picture 6. Cross-noise protection can be installed in both ends of the product, to dampen sound transmission along the beam.

Supply air beam

Pilot

Dimensioning

Cooling effect supplied in the ventilation air [W]

1. Start by calculating the required cooling effect that has to be supplied to the room in order to provide a certain temperature.
   Lindab's climate simulation program TEKNOsim is a great help here.
2. Calculate any cooling effect that is provided by the ventilation air.
3. The remaining cooling effect has to be supplied by the Professor.

Formula for air cooling effect: $P = \dot{m} \times C_p \times \Delta t$

Where:
$\dot{m}$ = mass flow [kg/s]
C_p= specific heat capacity [J/(kg·K]
q_p = air flow [l/s]
Δt = the difference between the temperature of the room and the temperature of the supply air [K].
It is usually $\dot{m} \times C_p \approx q_p \times 1.2$

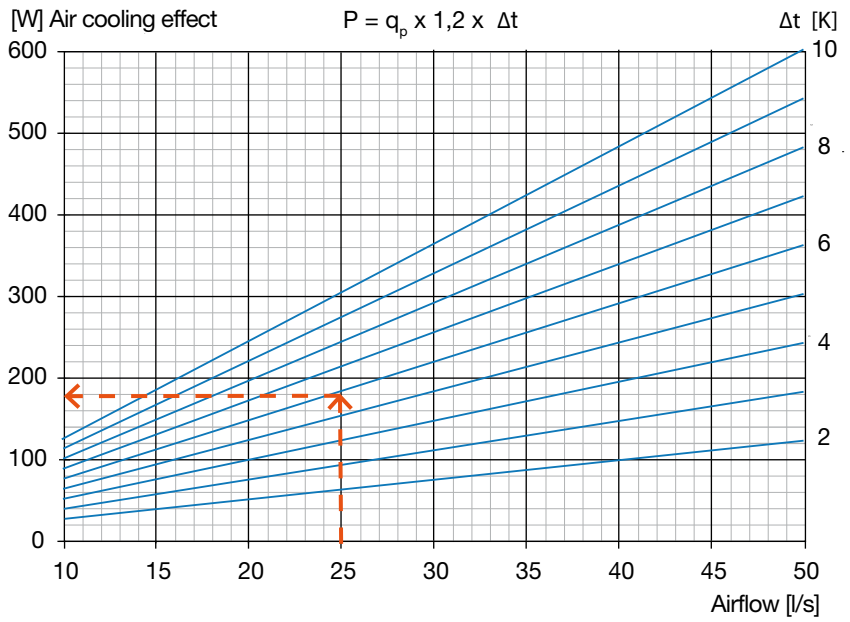

Diagram 1. Air cooling effect as a function of airflow. For example, if the air flow is 25 l/s and the under-temperature of the supply air is Δt = 6 K, the cooling effect from the graph is 180 W.

We reserve the right to make changes

Supply air beam

Pilot

Dimensioning

Effect diagram

Follow the instructions below, to read off the effect from the diagram.

1. Calculate Δt (room – average water)
2. Product length minus 0.4 m, to obtain the active length.
3. Divide the airflow by the active length. Enter the result on the lower axis of diagram 2.
4. Follow the flow line to the right pressure, and then read off the effect per active metre and Kelvin.
5. Multiply the effect that was read off by Δt.
6. Then, multiply by the active length.

Cooling
What is the cooling effect of a 2.4 m Pilot with 40 l/s and pressure of 80 Pa?
The room summer temperature is assumed to be 24.5° C
The cooling water temperature in/out of Pilot is 14/17° C

Answer
Temperature difference Δt = room – average water
Δt = 24.5 - (14+17) / 2 = 9 K
Active length = 2.4 m - 0.4 m = 2.0 m
40 l/s / 2 m = 20 l/(s·m)
Read off, from diagram 2: 54.2 W/(m·K).
Cooling effect (P) = 54.2 × 9 K × 2 m = 976 W

NB! The effect diagram applies for the nominal flow of 0.038 l/s. To obtain the right effect at other flows, read off the effect factor from diagram 3 and multiply the effect, which is read off, by this factor (see example 1).

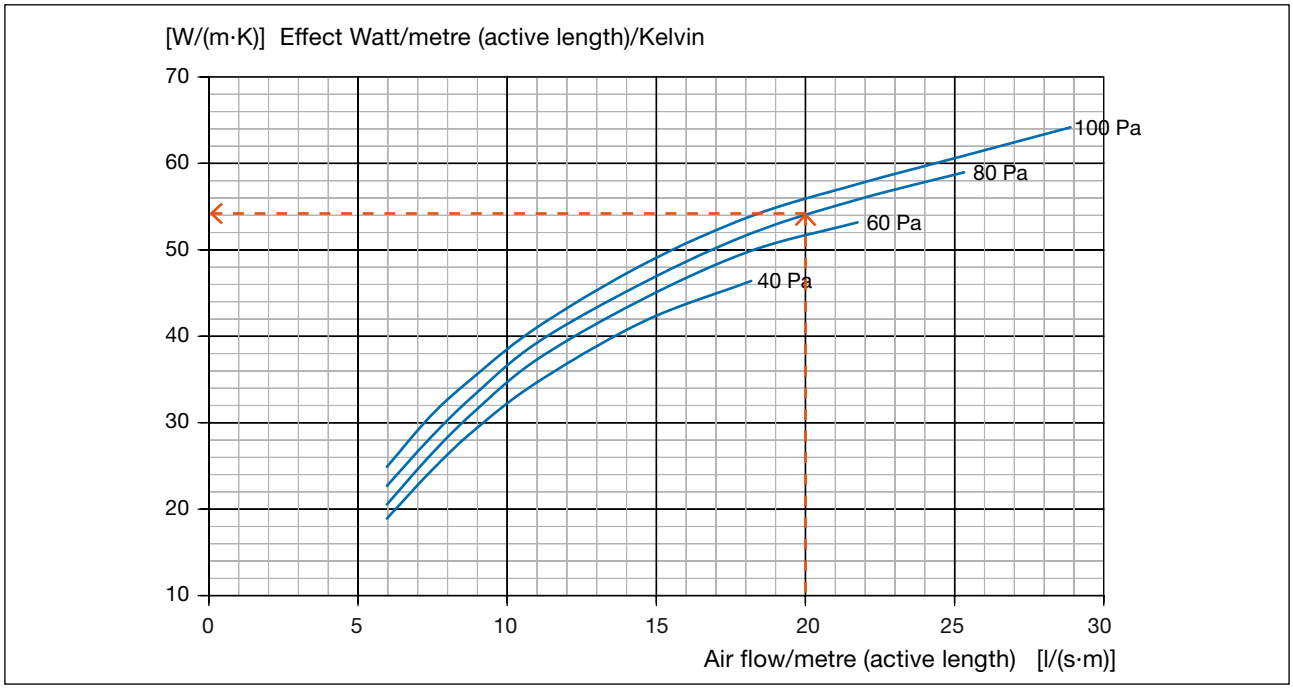

Diagram 2. Effect per active metre and Kelvin as a function of airflow per active metre at nozzle pressures of 40, 60, 80 and 100 Pa.

Dimensioning

Pressure drop in air connection (Pa)

Table 1, below, shows the pressure drop in the connection. After calculating the necessary pressure for the supply air beam, add it to the selected static pressure in the nozzles.

Example

Pilot I-60-15-125-A1-3.0 with 40 l/s and static nozzle pressure of 80 Pa. This provides the necessary total pressure in the duct of 80 Pa + 2 Pa = 82 Pa.

Pilot							
Air flow (l/s)	20	25	30	40	50	60	70
Pa	0	0	1	2	3	5	7

Table 1. Air pressure drop in the connection to Pilot I-60.

Supply air beam

Pilot

Dimensioning

Flow-adjusted effect factor

Example 1

Cooling
Read off the effect from the effect diagram and calculate your flow using the following formula: $q_w = P / (C_p \times \Delta t)$

Where:
q_w = water flow [l/s]
P = effect [W]
C_p= specific heat capacity [J/(kg·K)]
Δt = temperature difference in the water circuit in/out [K]

for example q_w = 976 / (4200 x 3) = 0.077 l/s
The effect factor will then be 1.055 (see diagram 3) and the new effect P = 976 x 1.055 = 1030 W.

NB! To obtain an exact value, repeat the calculation and calculate a new flow for the obtained effect. Read off a new adjustment factor, multiply it by the original effect from the effect diagram and obtain a new effect (see example 2).

Example 2

Heating
What is the heating effect of a 2.4 m Pilot with 40 l/s and pressure of 80 Pa?
The room winter temperature is assumed to be 21° C
The hot water temperature in/out of Pilot is 56/46° C

Answer
Temperature difference Δt = room – average water
Δt = 21 - (56+46) / 2 = 30 K
Active length = 2.4 m - 0.4 m = 2.0 m
40 l/s / 2 m = 20 l/(s·m)

Read off, from diagram 2. 54.2 W/(m·K).
Heating effect (P) = 54.2 × 30 K × 2.0 m = 3252 W

Use the calculated heating effect and calculate the water flow $q_w = P / (C_p \times \Delta t)$

NB! Δt = temperature difference in the water circuit in/out [K]
q_w = 3252 / (4200 x 10) = 0.077 l/s

The effect factor will then be 0.775 (see diagram 2) and the new effect P = 3252 x 0.775 = 2520 W.

Using the new heating effect, a new water flow is calculated. q_w = 2520 / (4200 x10) = 0.06 l/s

Read off the effect factor at 0.7 and calculate the effect.
P = 3252 x 0.77 = 2504 W

Using the new heating effect, a new water flow is calculated. q_w = 2504 / (4200 x10) = 0.06 l/s

The heating effect is calculated to be 2504 W.

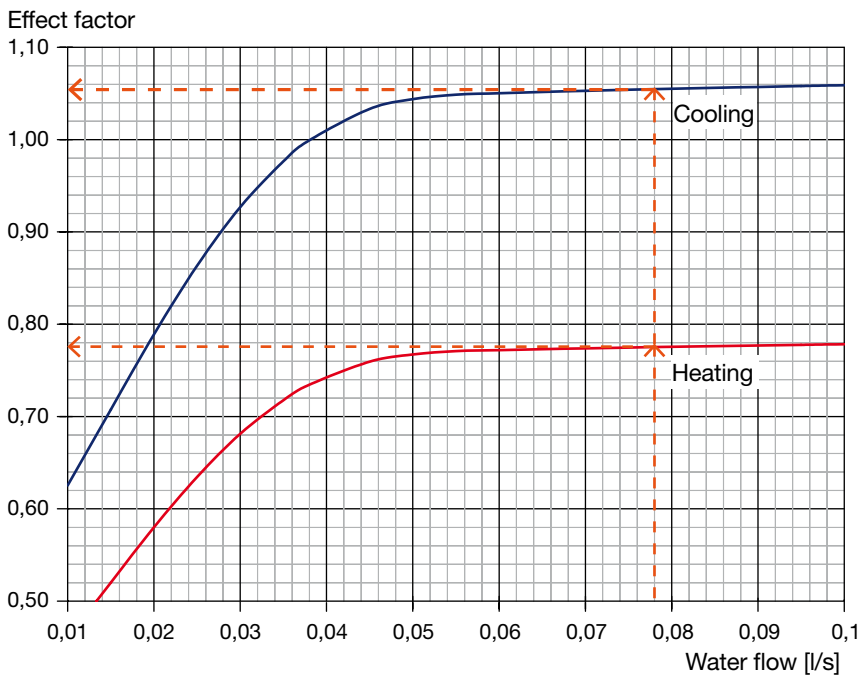

Diagram 3. Effect factor, as a function of water flow.

We reserve the right to make changes

Supply air beam

Pilot

Effect data

All table values are presented with flow-adjusted effects based on the Δt for Water out-in, given in the table.

Lindab's supply air beams are Eurovent-certified and tested according to EN-15116, EN-14518.

Noise

The table below presents both the sound pressure level with 10 m² Sabine equivalent sound absorption area dB(A) and the noise level.

Nozzle pressure 60 Pa				Water															Air		
Q(m³/h)	Q(l/s)	Pilot		Δt room - average water 7° C			Δt room - average water 8° C			Δt room - average water 9° C			Δt room - average water 10° C			Δt room - average water 11° C			Total pres-sure, duct	Noise level	Noise level
		L(m)	Ø(mm)	P(W)	q(l/s)	p(kPa)	P(W)	q(l/s)	p(kPa)	P(W)	q(l/s)	p(kPa)	P(W)	q(l/s)	p(kPa)	P(W)	q(l/s)	p(kPa)	Pa	dB(A)	dB(A)
72	20	1,8	12	310	0,015	0,4	384	0,018	0,6	466	0,022	0,8	555	0,027	1,2	646	0,031	1,6	60	<20	<24
		2,4	12	371	0,018	0,7	463	0,022	1,1	562	0,027	1,6	664	0,032	2,3	763	0,036	3,0	60	<20	<24
		3,0	12	385	0,018	1,0	481	0,023	1,5	583	0,028	2,2	687	0,033	3,0	787	0,038	4,0	60	<20	<24
		3,0	15	291	0,014	0,1	343	0,016	0,1	400	0,019	0,1	462	0,022	0,2	530	0,025	0,2	60	<20	<24
90	25	1,8	12	368	0,018	0,5	459	0,022	0,8	557	0,027	1,2	659	0,031	1,7	757	0,036	2,2	60	24	28
		2,4	12	487	0,023	1,2	606	0,029	1,9	725	0,035	2,7	837	0,040	3,6	941	0,045	4,5	60	<20	<24
		3,0	12	543	0,026	1,9	671	0,032	2,9	794	0,038	4,0	907	0,043	5,3	1011	0,048	6,5	60	<20	<24
		3,0	15	377	0,018	0,1	452	0,022	0,2	535	0,026	0,2	627	0,030	0,3	729	0,035	0,4	60	<20	<24
108	30	1,8	12	412	0,020	0,7	515	0,025	1,0	623	0,030	1,5	730	0,035	2,0	831	0,040	2,7	61	28	32
		2,4	12	583	0,028	1,7	716	0,034	2,6	841	0,040	3,6	955	0,046	4,7	1063	0,051	5,8	61	<20	<24
		3,0	12	680	0,032	3,0	820	0,039	4,3	948	0,045	5,7	1067	0,051	7,3	1175	0,056	8,8	61	<20	<24
		3,0	15	458	0,022	0,2	555	0,027	0,2	664	0,032	0,4	787	0,038	0,5	921	0,044	0,7	61	<20	<24
144	40	2,4	12	708	0,034	2,6	850	0,041	3,7	978	0,047	4,9	1097	0,052	6,2	1209	0,058	7,5	62	26	30
		3,0	12	867	0,041	4,8	1013	0,048	6,5	1147	0,055	8,4	1277	0,061	10,4	1407	0,067	12,6	62	<20	<24
		3,0	15	592	0,028	0,3	730	0,035	0,4	886	0,042	0,6	1055	0,050	0,9	1231	0,059	1,2	62	<20	<24
180	50	3,0	12	974	0,047	6,1	1125	0,054	8,1	1268	0,061	10,3	1412	0,067	12,7	1555	0,074	15,4	63	27	31
		3,0	15	691	0,033	0,4	858	0,041	0,6	1044	0,050	0,9	1238	0,059	1,2	1431	0,068	1,6	63	27	31

Table 2. Flow-adjusted effect table. Cooling circuit Δt = 3° C (Water in-out).
For the red values, the flow is below the recommended minimum flow of 0.025 l/s at Δt = 3° C. Increase the flow to the recommended minimum flow.

Supply air beam

Pilot

Cooling effect, Pilot

Nozzle pressure 80 Pa				Water															Air		
Q(m³/h)	Q(l/s)	Pilot		Δt room - average water 7° C			Δt room - average water 8° C			Δt room - average water 9° C			Δt room - average water 10° C			Δt room - average water 11° C			Total pressure, duct	Noise level	Noise level
		L(m)	Ø(mm)	P(W)	q(l/s)	p(kPa)	P(W)	q(l/s)	p(kPa)	P(W)	q(l/s)	p(kPa)	P(W)	q(l/s)	p(kPa)	P(W)	q(l/s)	p(kPa)	Pa	dB(A)	dB(A)
72	20	1,8	12	333	0,016	0,4	413	0,020	0,7	502	0,024	1,0	597	0,029	1,4	692	0,033	1,8	80	<20	<24
		2,4	12	411	0,020	0,9	512	0,024	1,3	620	0,030	2,0	727	0,035	2,7	829	0,040	3,5	80	<20	<24
		3,0	12	444	0,021	1,3	554	0,026	2,0	667	0,032	2,9	777	0,037	3,9	880	0,042	4,9	80	<20	<24
		3,0	15	323	0,015	0,1	384	0,018	0,1	450	0,021	0,2	523	0,025	0,2	603	0,029	0,3	80	<20	<24
90	25	1,8	12	395	0,019	0,6	493	0,024	0,9	598	0,029	1,4	703	0,034	1,9	803	0,038	2,5	80	25	29
		2,4	12	528	0,025	1,4	654	0,031	2,2	777	0,037	3,1	890	0,043	4,0	994	0,047	5,0	80	<20	<24
		3,0	12	602	0,029	2,3	737	0,035	3,5	863	0,041	4,8	977	0,047	6,1	1085	0,052	7,5	80	<20	<24
		3,0	15	411	0,020	0,1	495	0,024	0,2	589	0,028	0,3	694	0,033	0,4	810	0,039	0,5	80	<20	<24
108	30	1,8	12	440	0,021	0,7	549	0,026	1,2	662	0,032	1,7	772	0,037	2,3	874	0,042	2,9	80	29	33
		2,4	12	623	0,030	2,0	760	0,036	3,0	886	0,042	4,0	1001	0,048	5,1	1109	0,053	6,3	80	<20	<24
		3,0	12	734	0,035	3,4	877	0,042	4,9	1005	0,048	6,5	1125	0,054	8,1	1239	0,059	9,8	80	<20	<24
		3,0	15	493	0,024	0,2	600	0,029	0,3	722	0,035	0,4	858	0,041	0,6	1006	0,048	0,8	80	<20	<24
144	40	2,4	12	745	0,036	2,8	888	0,042	4,0	1017	0,049	5,3	1137	0,054	6,6	1253	0,060	8,0	81	27	31
		3,0	12	912	0,044	5,3	1061	0,051	7,2	1196	0,057	9,1	1331	0,064	11,3	1467	0,070	13,7	81	21	25
		3,0	15	631	0,030	0,3	781	0,037	0,5	949	0,045	0,7	1129	0,054	1,0	1313	0,063	1,4	81	21	25
180	50	2,4	12	818	0,039	3,4	963	0,046	4,7	1096	0,052	6,1	1219	0,058	7,6	1343	0,064	9,2	82	33	37
		3,0	12	1014	0,048	6,6	1167	0,056	8,7	1316	0,063	11,0	1464	0,070	13,7	1613	0,077	16,6	82	28	32
		3,0	15	732	0,035	0,4	911	0,044	0,7	1108	0,053	1,0	1309	0,063	1,4	1506	0,072	1,8	82	28	32
216	60	3,0	12	1081	0,052	7,5	1239	0,059	9,8	1396	0,067	12,4	1554	0,074	15,4	1712	0,082	18,7	83	33	37
		3,0	15	805	0,038	0,5	1004	0,048	0,8	1217	0,058	1,2	1429	0,068	1,6	1631	0,078	2,1	83	33	37

Table 3. Flow-adjusted effect table. Cooling circuit Δt = 3° C (Water in-out).
For the red values, the flow is below the recommended minimum flow of 0.025 l/s at Δt = 3° C. Increase the flow to the recommended minimum flow.

Nozzle pressure 100 Pa				Water															Air		
Q(m³/h)	Q(l/s)	Pilot		Δt room - average water 7° C			Δt room - average water 8° C			Δt room - average water 9° C			Δt room - average water 10° C			Δt room - average water 11° C			Total pressure, duct	Noise level	Noise level
		L(m)	Ø(mm)	P(W)	q(l/s)	p(kPa)	P(W)	q(l/s)	p(kPa)	P(W)	q(l/s)	p(kPa)	P(W)	q(l/s)	p(kPa)	P(W)	q(l/s)	p(kPa)	Pa	dB(A)	dB(A)
72	20	1,8	12	351	0,017	0,5	437	0,021	0,7	531	0,025	1,1	629	0,030	1,5	726	0,035	2,0	100	<20	<24
		2,4	12	438	0,021	1,0	547	0,026	1,5	659	0,031	2,2	769	0,037	3,0	871	0,042	3,9	100	<20	<24
		3,0	12	485	0,023	1,5	604	0,029	2,3	722	0,035	3,3	834	0,040	4,5	937	0,045	5,6	100	<20	<24
		3,0	15	346	0,017	0,1	412	0,020	0,1	485	0,023	0,2	566	0,027	0,3	655	0,031	0,3	100	<20	<24
90	25	1,8	12	416	0,020	0,7	519	0,025	1,0	628	0,030	1,5	735	0,035	2,1	837	0,040	2,7	100	25	29
		2,4	12	564	0,027	1,6	695	0,033	2,5	820	0,039	3,4	933	0,045	4,5	1038	0,050	5,5	100	<20	<24
		3,0	12	641	0,031	2,6	780	0,037	3,9	907	0,043	5,3	1022	0,049	6,7	1131	0,054	8,2	100	<20	<24
		3,0	15	434	0,021	0,2	525	0,025	0,2	626	0,030	0,3	740	0,035	0,4	865	0,041	0,6	100	<20	<24
108	30	1,8	12	465	0,022	0,8	579	0,028	1,3	695	0,033	1,9	806	0,039	2,5	909	0,043	3,2	101	30	34
		2,4	12	671	0,032	2,3	811	0,039	3,4	938	0,045	4,5	1057	0,051	5,7	1165	0,056	6,9	101	<20	<24
		3,0	12	775	0,037	3,8	919	0,044	5,4	1051	0,050	7,1	1170	0,056	8,7	1289	0,062	10,6	101	<20	<24
		3,0	15	521	0,037	0,2	637	0,030	0,3	769	0,037	0,5	915	0,044	0,7	1072	0,051	0,9	101	<20	<24
144	40	1,8	12	534	0,026	1,1	661	0,032	1,7	784	0,037	2,4	897	0,043	3,1	1001	0,048	3,8	102	35	39
		2,4	12	814	0,039	3,4	959	0,046	4,7	1091	0,052	6,1	1215	0,058	7,5	1338	0,064	9,1	102	28	32
		3,0	12	965	0,046	6,0	1116	0,053	7,9	1258	0,060	10,1	1400	0,067	12,5	1542	0,074	15,2	102	22	26
		3,0	15	682	0,033	0,4	847	0,040	0,6	1030	0,049	0,9	1222	0,058	1,2	1414	0,068	1,6	102	22	26
180	50	2,4	12	887	0,042	4,0	1033	0,049	5,5	1169	0,056	7,0	1301	0,062	8,6	1433	0,068	10,5	103	33	37
		3,0	12	1086	0,052	7,5	1244	0,059	9,9	1403	0,067	12,5	1561	0,075	15,5	1720	0,082	18,9	103	29	33
		3,0	15	811	0,039	0,5	1012	0,048	0,8	1226	0,059	1,2	1439	0,069	1,7	1641	0,078	2,2	103	29	33
216	60	3,0	12	1159	0,055	8,6	1327	0,063	11,2	1496	0,071	14,3	1665	0,080	17,7	1834	0,088	21,4	105	33	37
		3,0	15	900	0,043	0,7	1123	0,054	1,0	1352	0,065	1,5	1572	0,075	2,0	1777	0,085	2,5	105	33	37
252	70	3,0	12	1199	0,057	9,2	1373	0,066	12,0	1547	0,074	15,3	1722	0,082	18,9	1898	0,091	22,9	107	36	40
		3,0	12	952	0,045	0,7	1185	0,057	1,1	1421	0,068	1,6	1644	0,079	2,2	1850	0,088	2,7	107	36	40

Table 4. Flow-adjusted effect table. Cooling circuit Δt = 3° C (Water in-out).
For the red values, the flow is below the recommended minimum flow of 0.025 l/s at Δt = 3° C. Increase the flow to the recommended minimum flow.

We reserve the right to make changes

Supply air beam

Pilot

Heating effect, Pilot

Nozzle pressure 60 Pa				Water															Air		
Q(m³/h)	Q(l/s)	Pilot		Δt room - average water 20° C			Δt room - average water 25° C			Δt room - average water 30° C			Δt room - average water 35° C			Δt room - average water 40° C			Total pressure, duct	Noise level	Noise level
		L(m)	Ø(mm)	P(W)	q(l/s)	p(kPa)	P(W)	q(l/s)	p(kPa)	P(W)	q(l/s)	p(kPa)	P(W)	q(l/s)	p(kPa)	P(W)	q(l/s)	p(kPa)	Pa	dB(A)	dB(A)
72	20	1,8	12	670	0,016	0,2	965	0,023	0,4	1296	0,031	0,7	1618	0,039	1,1	1906	0,046	1,5	60	<20	<24
		2,4	12	804	0,019	0,4	1162	0,028	0,8	1531	0,037	1,3	1863	0,044	1,9	2162	0,052	2,6	60	<20	<24
		3,0	12	835	0,020	0,5	1206	0,029	1,0	1580	0,038	1,7	1913	0,046	2,5	2213	0,053	3,4	60	<20	<24
90	25	1,8	12	797	0,019	0,3	1152	0,028	0,6	1519	0,036	1,0	1851	0,044	1,4	2150	0,051	1,9	60	24	28
		2,4	12	1057	0,025	0,6	1494	0,036	1,2	1886	0,045	2,0	2232	0,053	2,7	2556	0,061	3,6	60	<20	<24
		3,0	12	1175	0,028	1,0	1632	0,039	1,8	2028	0,048	2,8	2384	0,057	3,9	2730	0,065	5,1	60	<20	<24
108	30	1,8	12	894	0,021	0,3	1286	0,031	0,7	1668	0,040	1,2	2003	0,048	1,7	2307	0,055	2,2	61	28	32
		2,4	12	1259	0,030	0,9	1726	0,041	1,6	2131	0,051	2,5	2492	0,060	3,4	2855	0,068	4,5	61	<20	<24
		3,0	12	1460	0,035	1,5	1940	0,046	2,6	2356	0,056	3,8	2755	0,066	5,2	3156	0,075	6,8	61	<20	<24
144	40	2,4	12	1519	0,036	1,3	2002	0,048	2,2	2423	0,058	3,2	2834	0,068	4,4	3246	0,078	5,8	62	26	30
		3,0	12	1840	0,044	2,3	2343	0,056	3,8	2820	0,067	5,5	3298	0,079	7,5	3778	0,090	9,8	62	<20	<24
180	50	3,0	12	2056	0,049	2,9	2590	0,062	4,6	3118	0,074	6,7	3647	0,087	9,1	4177	0,100	11,9	63	27	31

Table 5. Flow-adjusted effect table. Heating circuit Δt = 10° C (Water in-out).
For the red values, the flow is below the recommended minimum flow of 0.025 l/s at Δt = 10° C. Increase the flow to the recommended minimum flow.

Nozzle pressure 80 Pa				Water															Air		
Q(m³/h)	Q(l/s)	Pilot		Δt room - average water 20° C			Δt room - average water 25° C			Δt room - average water 30° C			Δt room - average water 35° C			Δt room - average water 40° C			Total pressure, duct	Noise level	Noise level
		L(m)	Ø(mm)	P(W)	q(l/s)	p(kPa)	P(W)	q(l/s)	p(kPa)	P(W)	q(l/s)	p(kPa)	P(W)	q(l/s)	p(kPa)	P(W)	q(l/s)	p(kPa)	Pa	dB(A)	dB(A)
72	20	1,8	12	720	0,017	0,2	1040	0,025	0,5	1388	0,033	0,8	1715	0,041	1,2	2006	0,048	1,7	80	<20	<24
		2,4	12	890	0,021	0,4	1281	0,031	0,9	1662	0,040	1,5	1997	0,048	2,2	2301	0,055	2,9	80	<20	<24
		3,0	12	963	0,023	0,6	1377	0,033	1,3	1764	0,042	2,1	2108	0,050	3,1	2414	0,058	4,0	80	<20	<24
90	25	1,8	12	856	0,020	0,3	1235	0,030	0,6	1612	0,039	1,1	1945	0,046	1,6	2247	0,054	2,1	80	25	29
		2,4	12	1144	0,027	0,7	1597	0,038	1,4	1992	0,048	2,2	2345	0,056	3,0	2686	0,064	4,0	80	<20	<24
		3,0	12	1300	0,031	1,2	1771	0,042	2,2	2176	0,052	3,3	2545	0,061	4,4	2915	0,070	5,8	80	<20	<24
108	30	1,8	12	955	0,023	0,4	1366	0,033	0,8	1753	0,042	1,3	2090	0,050	1,8	2402	0,057	2,4	81	29	33
		2,4	12	1343	0,032	1,0	1817	0,043	1,8	2224	0,053	2,7	2601	0,062	3,7	2979	0,071	4,9	81	<20	<24
		3,0	12	1572	0,038	1,7	2056	0,049	2,9	2485	0,059	4,2	2906	0,069	5,8	3329	0,080	7,6	81	<20	<24
144	40	2,4	12	1594	0,038	1,4	2079	0,050	2,4	2512	0,060	3,5	2938	0,070	4,7	3365	0,080	6,2	82	27	31
		3,0	12	1930	0,046	2,6	2443	0,058	4,1	2940	0,070	5,9	3439	0,082	8,1	3939	0,094	10,6	82	21	25
180	50	2,4	12	1742	0,042	1,7	2237	0,053	2,8	2693	0,064	4,0	3150	0,075	5,4	3608	0,086	7,1	83	33	37
		3,0	12	2142	0,051	3,2	2687	0,064	5,0	3234	0,077	7,2	3782	0,090	9,8	4332	0,103	12,8	83	28	32
216	60	3,0	12	2273	0,054	3,6	2851	0,068	5,6	3432	0,082	8,1	4014	0,096	11,0	4598	0,110	14,5	85	33	37

Table 6. Flow-adjusted effect table. Heating circuit Δt = 10° C (Water in-out).
For the red values, the flow is below the recommended minimum flow of 0.025 l/s at Δt = 10° C. Increase the flow to the recommended minimum flow.

Nozzle pressure 100 Pa				Water															Air		
Q(m³/h)	Q(l/s)	Pilot		Δt room - average water 20° C			Δt room - average water 25° C			Δt room - average water 30° C			Δt room - average water 35° C			Δt room - average water 40° C			Total pressure, duct	Noise level	Noise level
		L(m)	Ø(mm)	P(W)	q(l/s)	p(kPa)	P(W)	q(l/s)	p(kPa)	P(W)	q(l/s)	p(kPa)	P(W)	q(l/s)	p(kPa)	P(W)	q(l/s)	p(kPa)	Pa	dB(A)	dB(A)
72	20	1,8	12	760	0,018	0,2	1098	0,026	0,5	1457	0,035	0,9	1787	0,043	1,3	2079	0,050	1,8	100	<20	<24
		2,4	12	950	0,023	0,5	1360	0,032	1,0	1747	0,042	1,7	2084	0,050	2,4	2395	0,057	3,2	100	<20	<24
		3,0	12	1052	0,025	0,8	1488	0,036	1,5	1880	0,045	2,4	2225	0,053	3,4	2549	0,061	4,5	100	<20	<24
90	25	1,8	12	902	0,022	0,3	1296	0,031	0,7	1679	0,040	1,2	2014	0,048	1,7	2319	0,055	2,2	100	25	29
		2,4	12	1221	0,029	0,8	1683	0,040	1,6	2081	0,050	2,4	2443	0,058	3,3	2798	0,067	4,3	100	<20	<24
		3,0	12	1382	0,033	1,3	1858	0,044	2,4	2267	0,054	3,5	2651	0,063	4,8	3036	0,073	6,3	100	<20	<24
108	30	1,8	12	1008	0,024	0,4	1433	0,034	0,9	1823	0,044	1,4	2167	0,052	1,9	2482	0,059	2,5	101	30	34
		2,4	12	1442	0,034	1,2	1921	0,046	2,0	2335	0,056	3,0	2731	0,065	4,1	3128	0,075	5,4	101	<20	<24
		3,0	12	1654	0,040	1,9	2147	0,051	3,2	2584	0,062	4,6	3023	0,072	6,3	3462	0,083	8,2	101	<20	<24
144	40	1,8	12	1157	0,028	0,6	1612	0,038	1,1	2007	0,048	1,7	2361	0,056	2,3	2704	0,065	3,0	102	35	39
		2,4	12	1734	0,041	1,7	2229	0,053	2,7	2683	0,064	4,0	3138	0,075	5,4	3594	0,086	7,1	102	28	32
		3,0	12	2038	0,049	2,9	2569	0,061	4,5	3092	0,074	6,6	3616	0,086	9,0	4142	0,099	11,7	102	22	26
180	50	2,4	12	1880	0,045	1,9	2387	0,057	3,1	2873	0,069	4,5	3361	0,080	6,2	3849	0,092	8,1	103	33	37
		3,0	12	2283	0,055	3,6	2864	0,068	5,6	3448	0,082	8,1	4032	0,096	11,1	4619	0,110	14,6	103	29	33
216	60	3,0	12	2435	0,058	4,1	3055	0,073	6,4	3677	0,088	9,3	4300	0,103	12,6	4925	0,118	16,6	105	33	37
252	70	3,0	12	2519	0,060	4,4	3160	0,075	6,8	3804	0,091	9,9	4449	0,106	13,5	5096	0,122	17,7	107	36	40

Table 7. Flow-adjusted effect table. Heating circuit Δt = 10° C (Water in-out).
For the red values, the flow is below the recommended minimum flow of 0.025 l/s at Δt = 10° C. Increase the flow to the recommended minimum flow.

Supply air beam

Pilot

Sound data

Internal sound dampening ΔL

Hz	63	125	250	500	1000	2000	4000	8000
dB	15	12	7	5	3	6	10	12

Table 8. Pilot's internal sound dampening.

Noise level L_{woct}

For calculation of the noise level

Correction C_{oct} (dB) Octave band, average frequency (Hz)								
Hz	**63**	**125**	**250**	**500**	**1000**	**2000**	**4000**	**8000**
dB	17	1	3	1	0	-5	-14	-12

Table 9. Pilot's noise levels L_{woct} for each octave band in the beam, are calculated by adding the corrections C_{oct} from the table above to the sound pressure level L_p dB(A). The sound pressure level is read from tables 1 to 6. The noise levels are calculated using the following formula: $L_{woct} = L_p + C_{oct}$

We reserve the right to make changes

Supply air beam

Pilot

Couplings & connections

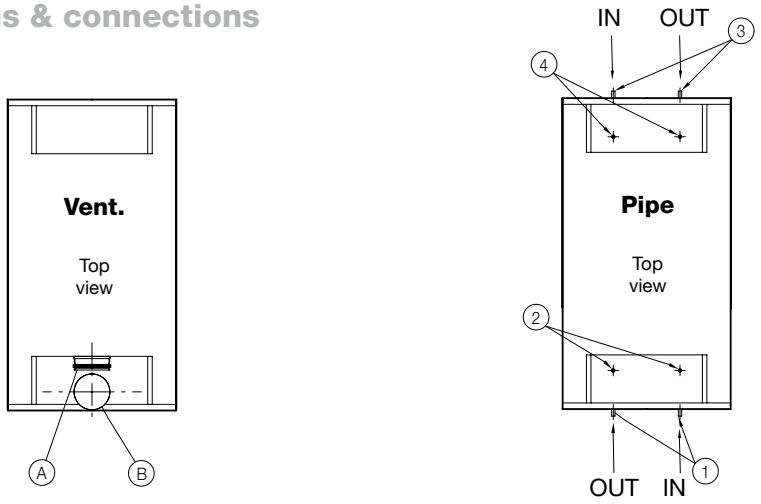

Figure 1. Coupling and connection options. Feed is always the connection on the right when looking at the pipes.

Examples of designations

Figure 2 shows examples of common coupling options. Type A1 has a horizontal air connection at the end and a horizontal pipe connection at the same end of the beam.

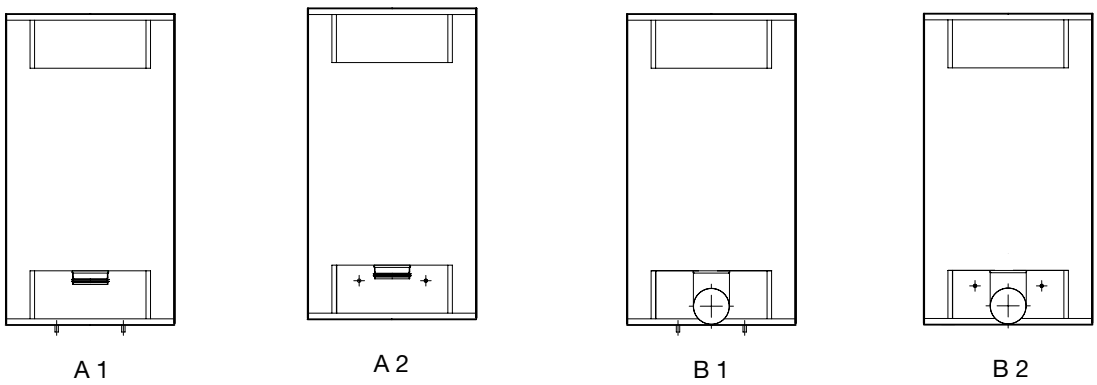

Figure 2. Pilot's most common coupling options A1, A2, B1 and B2.

Supply air beam Pilot

Connection, ventilation & pipes

Ventilation

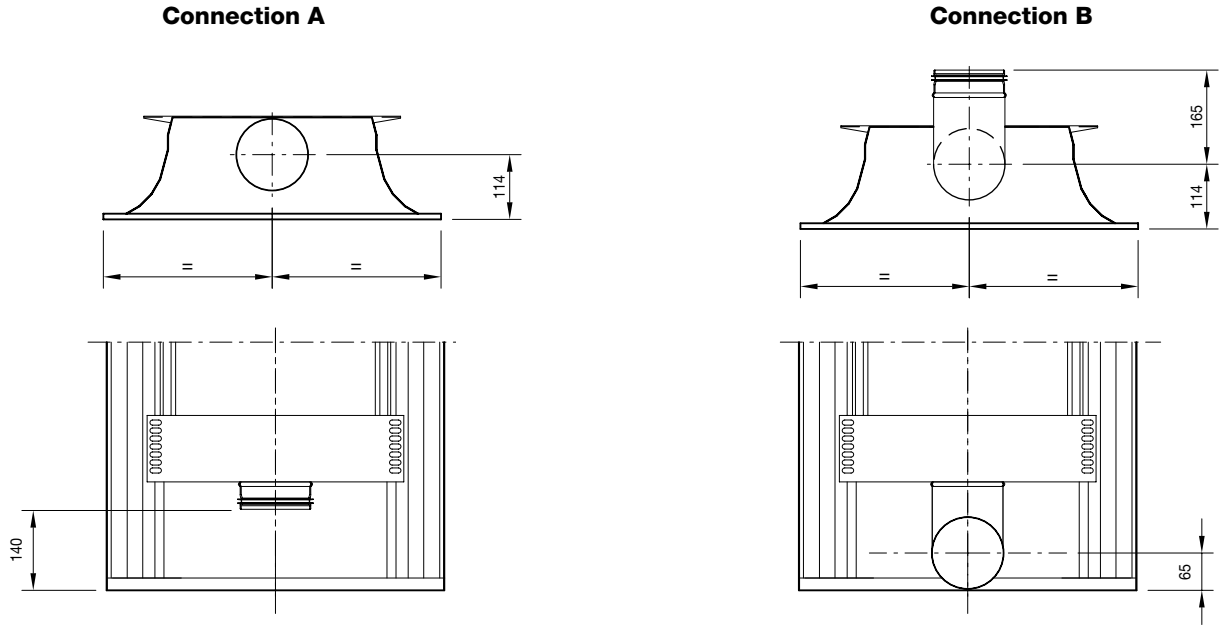

Figure 3. Pilot is supplied with Lindab's inlet pipes with the standard sleeve size (ILF 125). The ventilation connection is horizontal. For coupling option A, Lindab's nipple (NPU-125) is included. For coupling option B, Lindab's elbow piece (BU 90°) is included. The drawings are done with these articles.

Pipe

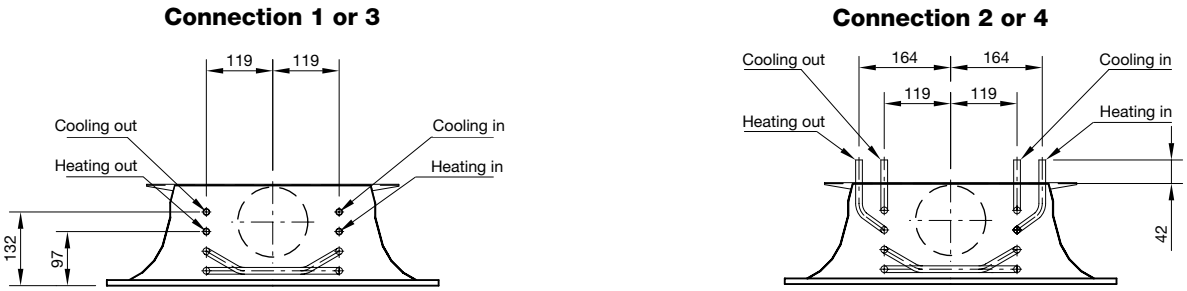

Figure 4. Pilot is supplied as standard with horizontal pipe outlets. (Ø12 mm). Coupling options 1 and 3 include preassembled, straight Tectite couplings and unassembled CU pipes. Coupling options 2 and 4 include preassembled Tectite elbow couplings and unassembled CU pipes. The drawings are made with these articles.

NB! When compression couplings are used, support sleeves must also be used, because of the soft copper pipes. The max temperature for Tectite is 65° C at 10 bar and 90° C at 6 bar.

We reserve the right to make changes

Supply air beam

Pilot

Valves & actuators

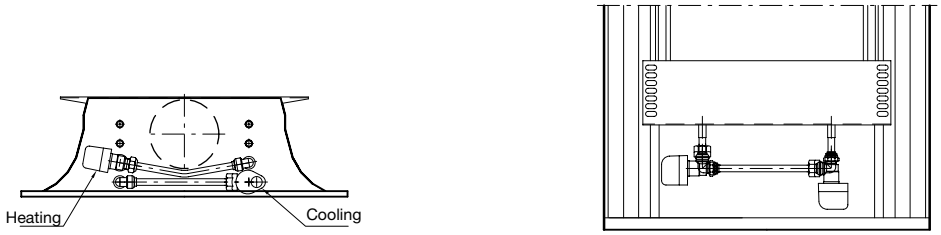

Figure 5. Position of valves and actuators. Heating and cooling have a Ø12 mm connection.

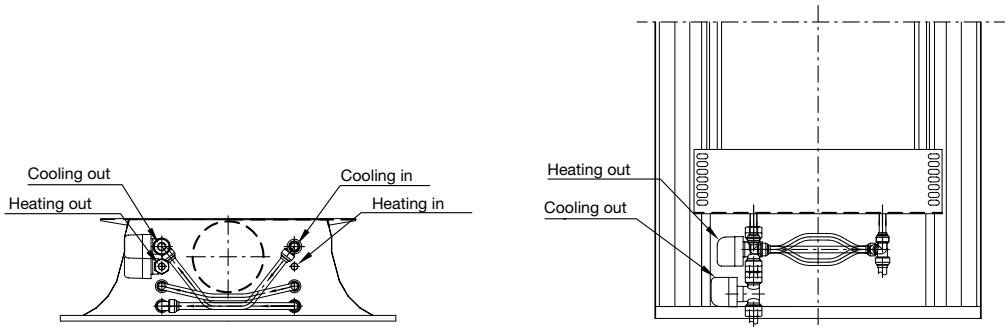

Figure 6. Position of valves and actuators. Heating has a Ø12 mm connection and cooling a Ø15 mm connection. Only available for Pilot 3.0 m.

Weight and water volume

	Pilot 1.8 m	Pilot 2.4 m	Pilot 3.0 m
Weight, kg	24	31	38
Water volume, cooling, l	1.2	1.6	2.0
Water volume, heating, l	0.6	0.8	1.0

Table 10. Pilot's weight and water volume.

Supply air beam

Pilot

Suspension, mm

Pilot I-60

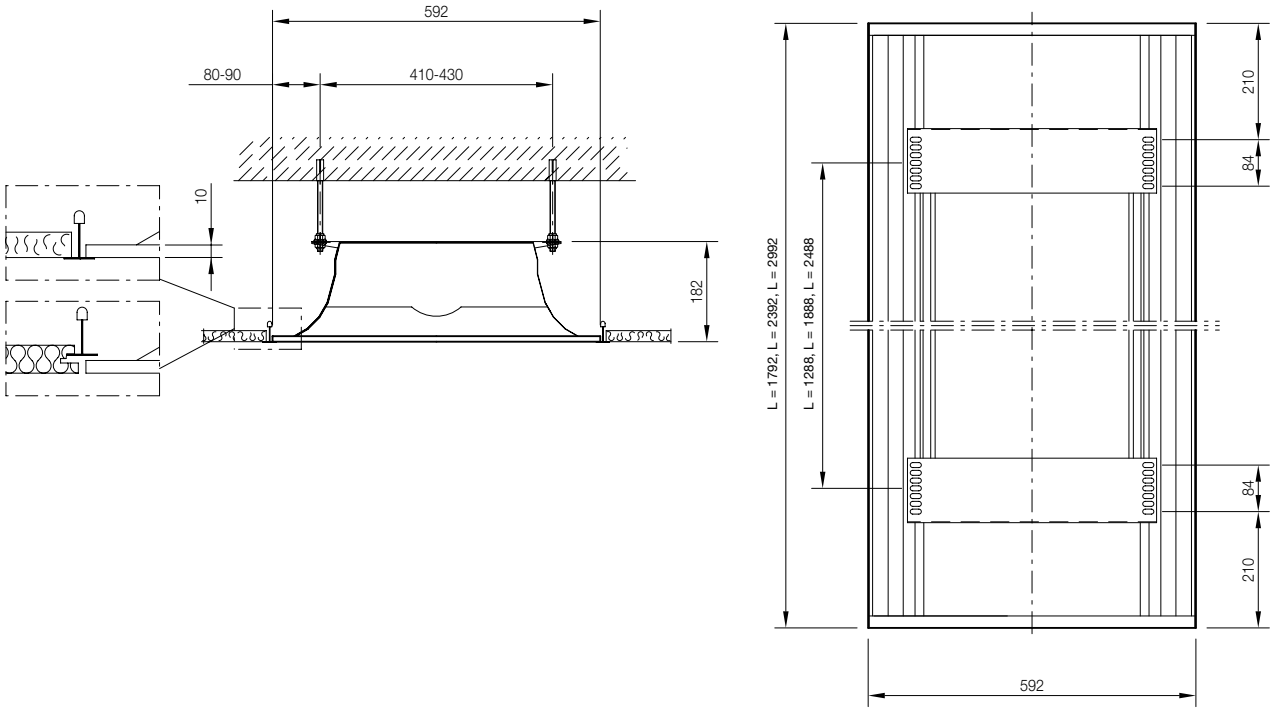

Figure 7. Pilot I-60 suspension, dimensions. Suspension components are not supplied as part of the standard package.

NB! Pilot 3.0 m also has a suspension option for the central part of the beam.

Pilot X-60

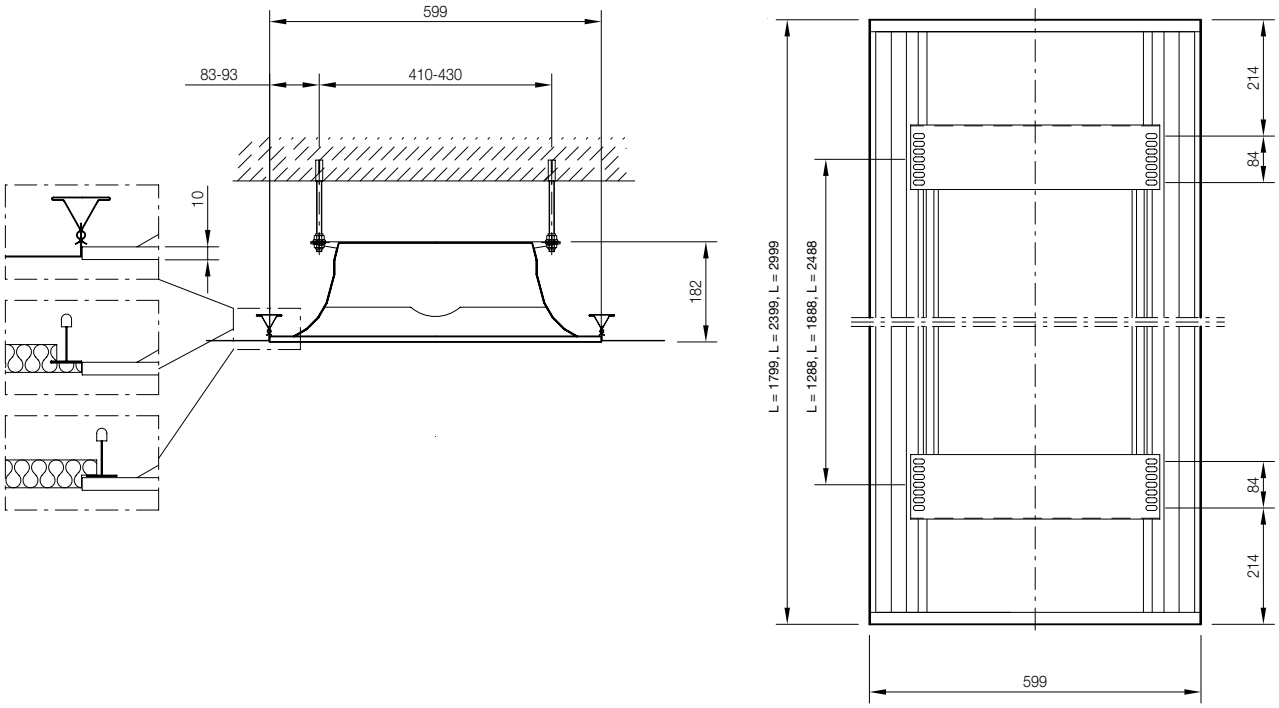

Figure 8. Pilot X-60 suspension, dimensions. Suspension components are not supplied as part of the standard package.

NB! Pilot 3.0 m also has a suspension option for the central part of the beam.

We reserve the right to make changes

Supply air beam

Pilot

Flow patterns, Pilot

The Jet Gap technology used in Pilot guarantees the Coanda effect and a fan-shaped distribution profile in all cases. The fan-shaped distribution pattern ensures air velocities in the living area that are half those obtained with a linear distribution pattern. The measurements shown below were made with a cooled supply air (Δt room air – supply air) of 5° C and cooling in the water circuit (Δt – room air – average water temperature) of 8° C. All heat is supplied through the walls (according to the Nordtest NT VVS 078 method, V document 1996:1).

Please contact Lindab, for more flow patterns and other measurements

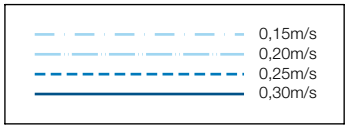

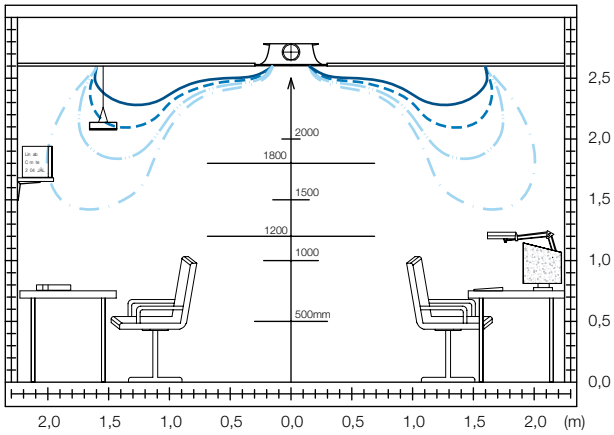

Figure 10. Pilot I-60, 1.8 m - 28 l/s / 2.4 m – 40 l/s 3.0 m – 52 l/s, 60 Pa

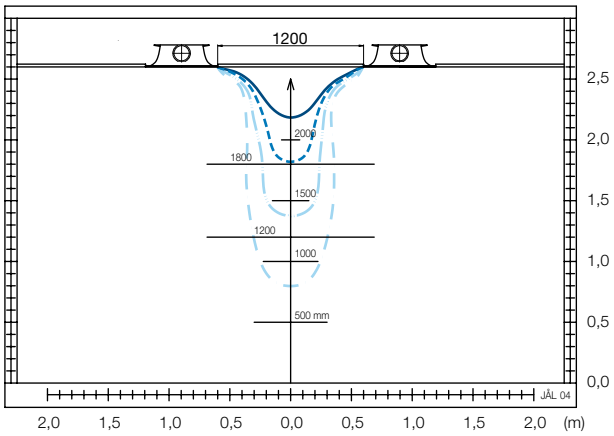

Figure 12. Pilot I-60, 1.8 m - 20 l/s / Pilot I-60, 2.4 m - 30 l/s Pilot I-60, 3.0 m - 40 l/s, 60 Pa.

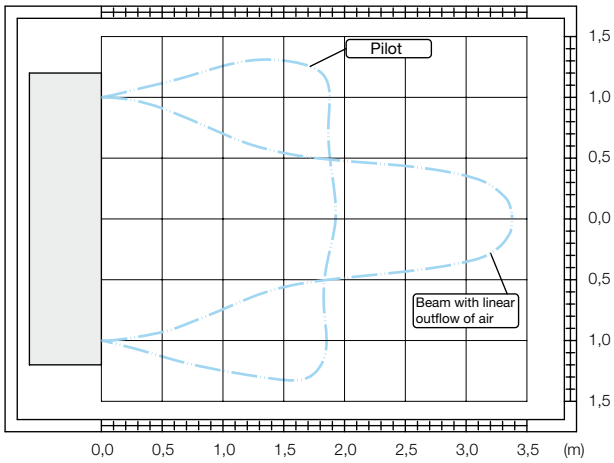

Areas with air velocities above 0.20 m/s are shown above. Measurements were conducted 100 mm below the ceiling.

Figure 9. Pilot I-60, 2.4 m - 40 l/s, 60 Pa.

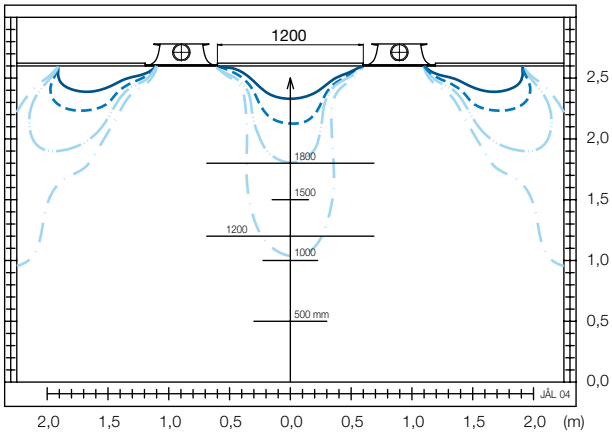

Figure 11. Pilot I-60, 1.8 m - 15 l/s / Pilot I-60, 2.4 m - 22 l/s 3.0 m – 29 l/s, 60 Pa

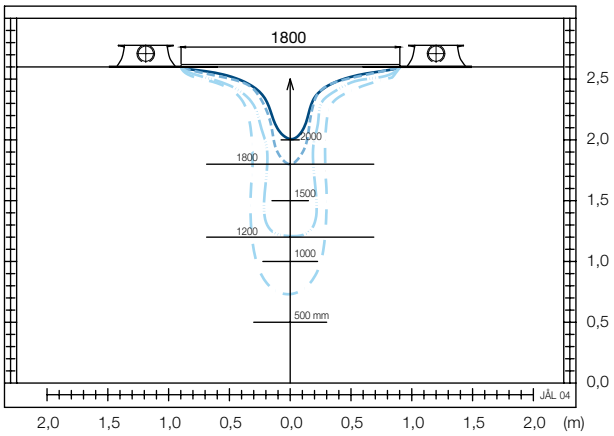

Figure 13. Pilot I-60, 1.8 m - 28 l/s / Pilot I-60, 2.4 m - 40 l/s Pilot I-60, 3.0 m - 52 l/s, 60 Pa.

Supply air beam Pilot

Pressure drop, cooling/heating

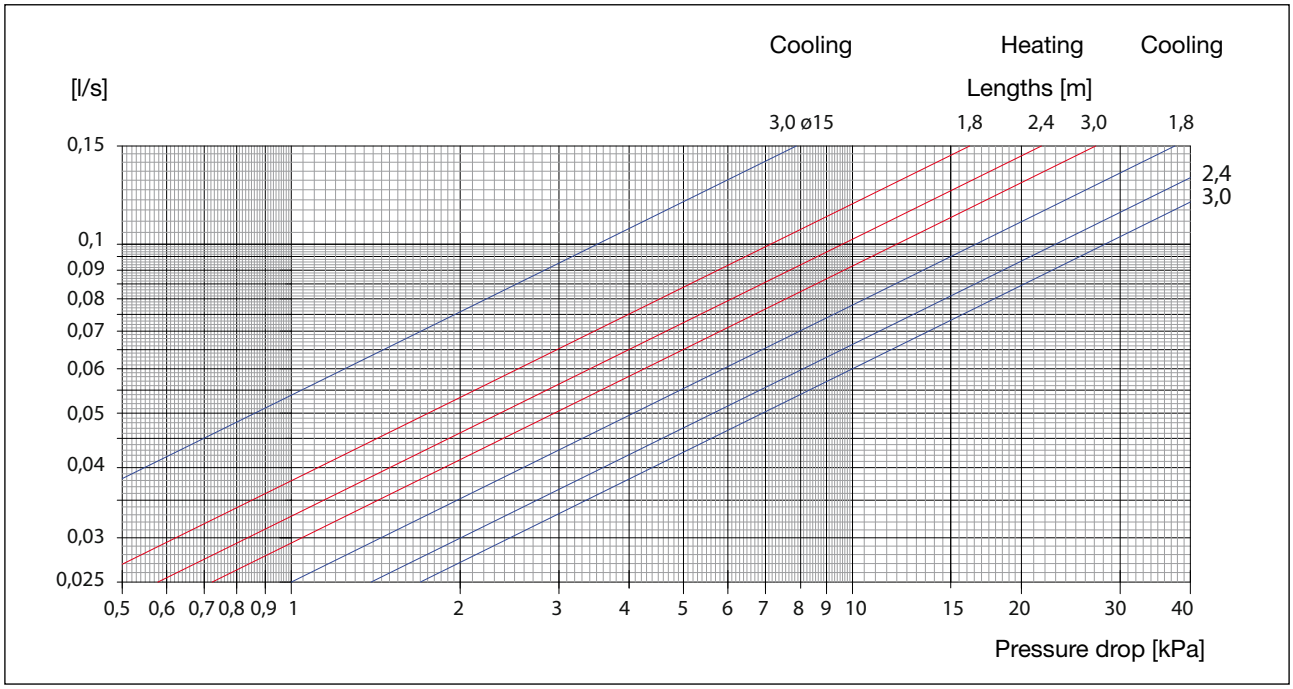

Diagram 4. Pressure drop in water circuit, cooling.

$q_w = P / (C_p \times \Delta t)$

q_w = *water flow [l/s]*
P = *effect [W]*
C_p = *specific heat capacity [J/(kg·K)]*
Δt = *temperature difference in the water circuit in/out [K]*

Example, cooling:

Pilot 2.4 m, which provides an output of 976 W
$\Delta t = 3$ *K*
$q_w = 1030 / (4200 \times 3) = 0.077$ *l/s*
The pressure drop in the water circuit is read off as 5.3 kPa.

Example, heating:

Pilot 2.4 m, which provides an output of 2504 W
$\Delta t = 10$ *K*
$q_w = 2504 / (4200 \times 10) = 0.06$ *l/s*
The pressure drop in the water circuit is read off as 3.4 kPa.

We reserve the right to make changes

Supply air beam

Pilot

Control

Lindab offers control equipment that is very simple to use. To avoid the heating and cooling being activated at the same time, the system is controlled sequentially (Regula Combi). It is also possible to control only the heating or the cooling (Regula Mono). For the technical data, refer to the chapter Regula.

Colour

Pilot is available as standard in white, RAL 9010, gloss value 30. Other colours may be ordered specially.

Designations

Product/Version:	Pilot I or X
Width, [cm]:	60
Connection diam. water, [mm]:	12 or 15
Connection diam. air, [mm]:	125
Coupling options:	Air: A, B
Water:	1, 2, 3, 4
Length, [m]:	1.8 m, 2.4 m or 3.0 m
Plus features:	See page 141

Programme text

Pilot with adjustable airflow, for a given duct pressure, air distribution is adjustable between both sides of the beam and longitudinally. The flow pattern must be fan-shaped. Water and air connections must be flexible and accessible from below.

Supply air beams from Lindab	**Qty**
Product:	
Pilot I-60-12-125-A2-1.8 m	40
Air quantity:	15 l/s
Nozzle pressure:	60 Pa
Plus features:	
Presetting of pressure and air:	
Regula Secura:	
Heating:	
Cooling control valve:	
Cooling actuator:	
Heating control valve:	
Heating actuator:	
Accessories:	
Regula Combi:	40
Product:	
Pilot I-60-15-125-A1-3.0 m	10
Plus features:	
Regula Combi:	
Regula Secura:	
Cooling control valve:	
Cooling actuator:	
Accessories:	
Tectite tool:	1

Supply air beam

Architect

Contact, Overview, Index	1
Guideline heating and cooling	2
Plexus	3
Professor	4
Pilot	5
Architect	6
Polaris I & S	7
Plafond	8
Podium	9
Celo	10
Cabinett	11
Capella	12
Carat	13
Fasadium	14
Atrium H & C /Loggia	15
Regula	16
Drypac™	17
Lighting	18
TEKNOsim	19

© 11.2009 Lindab Ventilation A/S. All forms of reproduction without written permission are forbidden. Lindab® is the registered trademark of Lindab AB. Lindab's products, systems, product and product group designations are protected by intellectual property rights (IPR).

Supply air beam Architect

Use

Lindab's supply air beam Architect provides great freedom of choice in design. A large number of predefined design solutions can be easily applied, in terms of technology, to create customised design solutions with great flexibility, but without affecting the function and performance. One of the advantages is that planning can be done without having to decide on a design. It is also simple to renew the design, if necessary in the future.

Architect is equipped with divergent nozzles to ensure a draft-free indoor climate.

Architect can be equipped with the following features cooling, heating, ventilation, Drypac™ condensation protection, Secura condensation guard, built-in valves and actuators and built-in lighting.

Installation

Architect is a supply air beam for visible installation, which can be mounted on to the ceiling, a wall or suspended. Architect can be supplied with horizontal or vertical connections.

Worth noting

Architect provides great architectonic freedom and has small dimensions, which results in a wide range of applications for the product. Lindab's supply air beams are Eurovent-certified and tested according to EN-15116, EN-14518.

Key figures

Length:	1.2 – 3.6 m
Width:	350 – 490 mm
Height:	111 – 151 mm
Capacity:	Cooling effect of up to 1625 W
	Air quantity of up to 65 l/s

1 2 3 4 5 6 7 8 9 10 11 12 13 14 15 16 17 18 19

Supply air beam Architect

Design

Form and technology working together, without affecting one another.

The Architect concept is unique. The shape and appearance of the product can be varied without any adverse effect on the technology. A unique Architect form can be created for each individual environment. Architect is based on the same technology, irrespective of the model you choose; what distinguishes the models is the design and shape of the product. Lindab offers seven different standard designs, products that should appeal to different tastes and suit different interior environments.

The Architect models make it possible to use different perforations and geometric shapes in the products. The perforations can be slots, or round or oval shapes. The standard perforation is called Slot; other variants can be ordered as plus features. As long as it is technologically possible, your imagination is the only limit to the shapes and models that can be created (see picture 1).

From idea to reality

The technical design of Architect, with its extremely small dimensions, allows you to change its look easily so as to match different interiors. The design and shape, of course, must be within certain basic technical limits for the supply air beam to function properly.

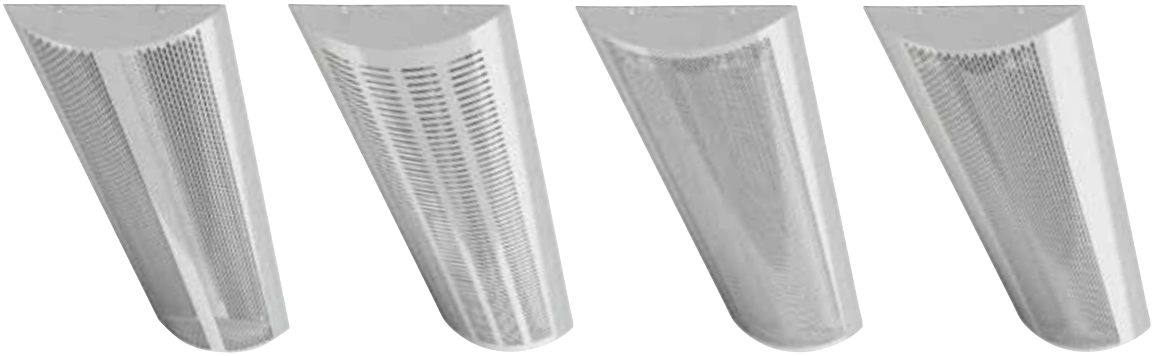

Picture 1. Example of how different types of perforations can be used. The model on the far left is the standard design for Architect Moon. The other perforations can be ordered as plus features.

We reserve the right to make changes

Supply air beam Architect

Design options

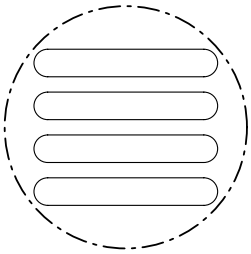

Line, 9 × 60 mm

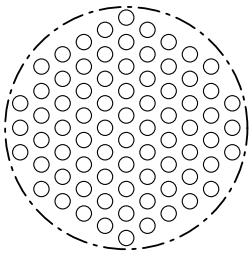

Dot, Ø 5 mm

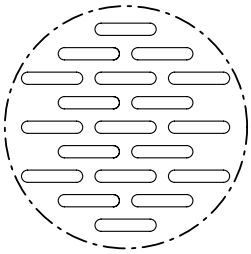

Slot, 4 × 20 mm, standard

Picture 2. Perforation line, dot and slot.

Beam model	Perforation, mm	Open area*, %	Width, perforated surface, mm
Architect Oval	Slot 4 × 20 Line 9 × 60 Dot Ø 5	50 33 33	2 × 116 2 × 136 340
Architect Wave	Slot 4 × 20	50	230
Architect Moon/ Wing	Slot 4 × 20 Slot 4 × 20 Line 9 × 60 Dot Ø 5	50 33 33 33	2 × 116 340 330 340
Architect Square	Slot 4 × 20 Slot 4 × 20 Line 9 × 60	50 33 33	2 × 116 330 2 × 136
Architect Facet	Slot 4 × 20 Line 9 × 60	50 33	2 × 52 + 170 4 × 60

* % of perforated surface

Table 1. Architect's perforation options.

Supply air beam

Architect

1
2
3
4
5
6
7
8
9
10
11
12
13
14
15
16
17
18
19

Design options

Architect Wave

Architect Oval

Architect Square

Architect Box

Architect Facet

Architect Wing

Picture 3. Architect provides great freedom of choice in design. Architect Moon is shown on Picture 1, 4, 6, 7 and 8.

We reserve the right to make changes

Supply air beam

Architect

Function

Powerful function in an extremely small format

Architect is based on the induction principle. Ventilation air with a given dynamic pressure is discharged through specially formed nozzles into a dispersal zone, thereby creating a low static pressure. The low static pressure causes the warm air from the room to be drawn through the battery. The volume of the warm indoor air is 4 to 5 times that of the ventilation air. The air is cooled as it passes through the battery, which consists of aluminium ribs with copper pipes filled with cold running water. The heat of the room is absorbed through the aluminium ribs and then transferred through the copper pipe to the water circuit and goes further to a central cooling unit (see picture 4).

Despite the product's small external dimensions, the design allows for large volumes of air and highly efficient cooling. The nozzles, which discharge the ventilation air, are designed to obtain the Coanda effect. Due to the design, the air starts to adhere to the duct in the nozzle, which means that the Coanda effect is maintained close to the ceiling. Since the air is directed slightly upwards, this important aero-technical function is also achieved in the suspended models.

The water pipes are made of copper. Nevertheless the water should be oxygen-free, to prevent corrosion.

A heating function can also be obtained from an additional heating pipe in the battery.

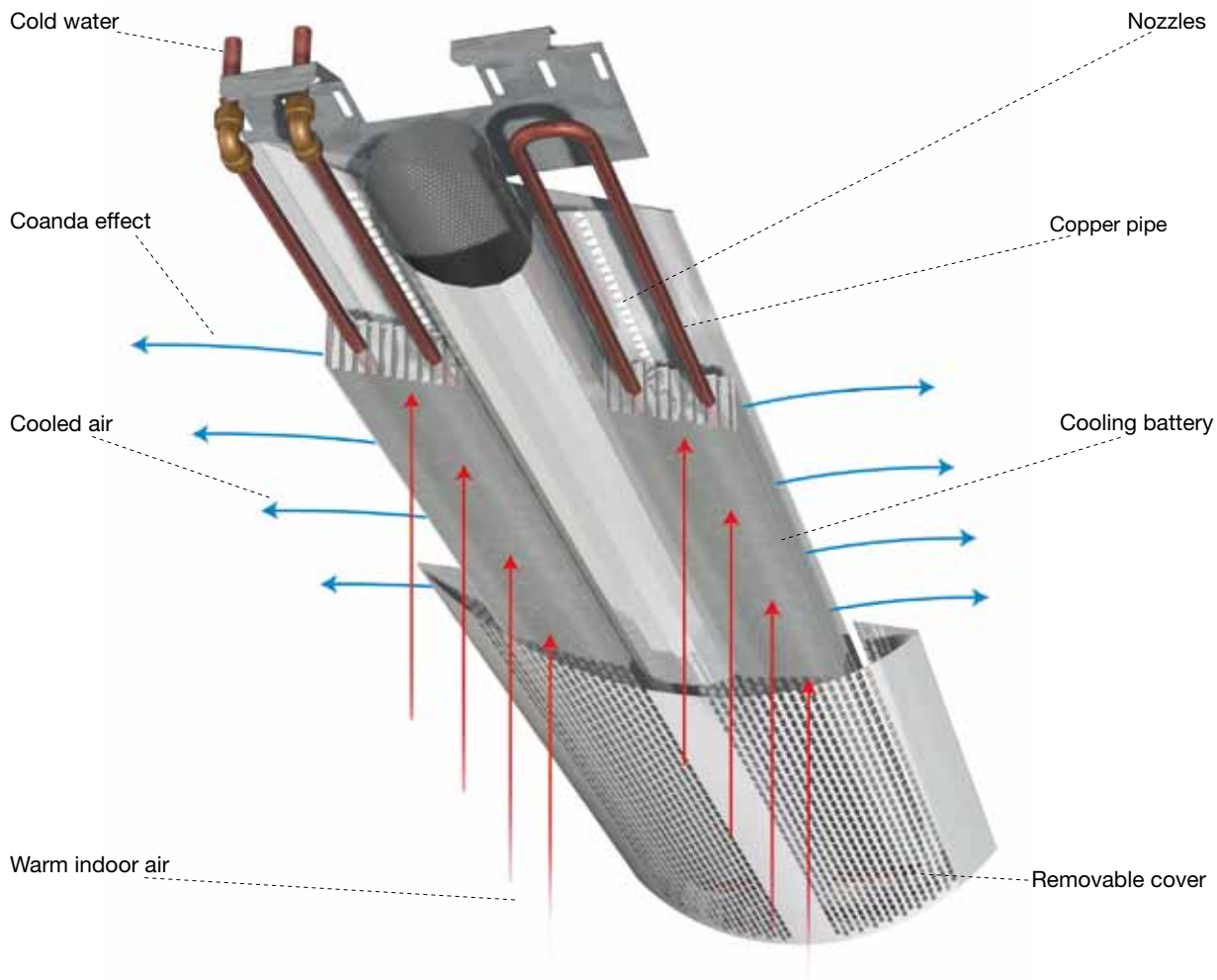

Picture 4. Architect is based on the induction principle. The Picture shows Architect Moon.

Supply air beam

Architect

Installation examples

Productive indoor climate in different interiors

The principle behind Architect is that the cooled or heated air spreads along the ceiling. Through induction, the air from the room is drawn back into the central part of the beam, to be cooled or heated. This feature keeps the room well ventilated. Architect is equipped with angled nozzles that distribute the air over a wide area. This results in considerably lower air velocities in the room than with traditional nozzle technology.

Architect's flexible shape and appearance allows the supply air beams to be fitted easily in to a variety of interiors and to appeal to different styles and tastes. This chapter includes several different suggestions for interiors. When installed with a horizontal air and water connection, the cover of the product can be extended to conceal the connection pipes. The cover can be manufactured in lengths of up to 3.6 m.

Where the installation is directly on to the ceiling, the smallest separation between the beam and the nearest wall is 100 mm for all models except Architect Box, which requires 500 mm. For suspended installation, if the beam is placed less than 1000 mm from the wall, some of the air from the side facing the wall will flow back over the beam and in towards the room.

The technology used in Architect also enables installation on to the wall. Pictures 6 and 7 show several different wall installations. The technology and function work regardless of whether the installation is vertical or horizontal. If vertical installation is required, this should be specified in the product specification.

Picture 5. Architect Moon installed on a ceiling.

Picture 6. Architect Moon installed vertically on a wall.

Picture 7. Architect Moon installed horizontally on a wall.

We reserve the right to make changes

Supply air beam Architect

Installation examples

Picture 8. Architect Moon in a restaurant environment.

Picture 9. Architect Facet in a waiting room / lobby.

Picture 10. Architect Win in a conference room.

Supply air beam Architect

Data

Variants

Architect is available for direct installation on to a ceiling, a wall or suspended.

Lengths: Architect is available in lengths from 1.2m to 3.6m in steps of 0.1m.

Water connection: The water connection is horizontal or vertical, with outer diameter of 15 mm.

Air connection: The air connection is horizontal or vertical, Ø100 mm or Ø125 mm.

Design: Architect can be supplied in different shapes and with different cover perforations (see table 1). Where a design or a perforation is required, which differs from the standard models, please contact Lindab.

Nozzle angle: The nozzles can be ordered with different angles: 0°, 16° or 30°. The standard angle is 30°.

Surface treatment: Architect is manufactured as standard from enamelled sheet metal, colour white, RAL 9010.

Airflow control: The product has a preset pressure drop value, so on-site adjustment is not necessary. A prerequisite is that the building's duct system has a relatively low-pressure drop compared to that of the product. Where a damper is desired, you can order a balancing damper.

Plus features

Factory preinstalled.

Heating: A heating function can also be obtained by an additional heating pipe in the battery. Available for connection options A1, A2, B1 and B2.

Drypac™: Anti-condensation treated cooling batteries, which enable water temperatures below the dew point without dripping. Refer to the chapter Drypac™.

Wall installation: Architect can also be mounted horizontally or vertically on to a wall. Contact Lindab for more detailed information.

Extended cover: Where it is installed with a horizontal air and water connection, the product's cover can be extended to conceal the connection pipes (see figure 11, 12). The cover can be produced in lengths of up to 3.6 m. The extended underside also includes wall or ceiling attachments.

Integrated valve and actuator: A control valve, with variable Kv value, and an actuator can be pre-installed in the product.

Colour: For special colours and other surface finishes, for example, galvanised and powder coating. Contact Lindab for more information.

Lighting: The product can be equipped with type-approved light fittings. Refer to the chapter Lighting.

Regula Secura: There is an option to have Lindab's Regula Secura condensation guard installed in the product.

Regula Connect: The product can be equipped with the Regula Connect connection card. Refer to the chapter Regula.

Air vent: Air vents are not supplied as part of the standard package, but they can be ordered to be pre-installed.

Accessories

Delivered separately.

Control: Refer to the chapter Regula.

Cover plate: It is delivered in two versions. With ceiling attachment or with attachment for both ceiling and wall (see figures 13 to 14).

We reserve the right to make changes

Supply air beam

Architect

Dimensioning

Cooling effect supplied by the ventilation air [W]

1. Start by calculating the necessary cooling effect that has to be supplied to the room to achieve a given temperature.
   Lindab's climate simulation program TEKNOsim is a great help here.
2. Calculate any cooling effect provided by the ventilation air.
3. The remaining cooling effect has to be supplied by the Architect.

Formula for the air cooling effect: $P = \dot{m} \times C_p \times \Delta t$

Where:
$\dot{m}$ = mass flow [kg/s]
C_p = specific heat capacity [J/(kg·K)]
q_p = air flow [l/s]
Δt = the difference between the room temperature and the temperature of the supply air [K].
It is usually $\dot{m} \times C_p \approx q_p \times 1{,}2$

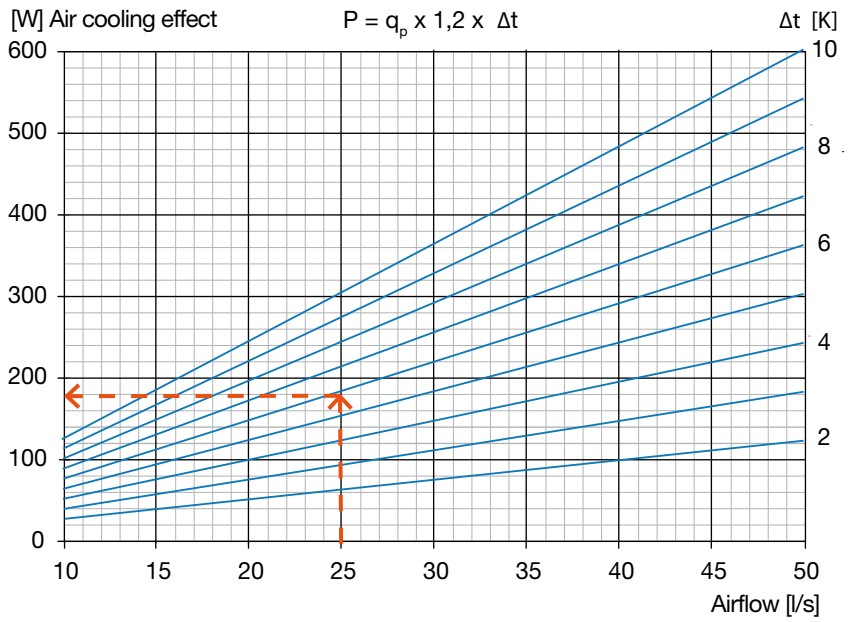

Diagram 1. Air cooling effect as a function of airflow. For example, if the air flow is 25 l/s and the under-temperature of the supply air is Δt = 6 K, the cooling effect from the graph is 180 W.

Supply air beam Architect

Dimensioning

Effect diagram

Follow the instructions below, to read off the effect from the diagram.

1. Calculate Δt (room – average water)
2. Product length minus 0.4 m, to obtain the active length.
3. Divide the airflow by the active length. Enter the result on the lower axis of diagram 2.
4. Follow the flow line to the right pressure, and then read off the effect per active metre and Kelvin.
5. Multiply the effect that was read off by Δt.
6. Then, multiply by the active length.

Cooling
What is the cooling effect of a 2.4 m Architect at 20 l/s and 60 Pa of pressure?
The room's summer temperature is assumed to be 24.5° C
The cooling water temperature in/out of Architect is 14/17° C

Answer
Temperature difference Δt = room – average water
Δt = 24.5 - (14+17) / 2 = 9 K
Active length = 2.4 m - 0.4 m = 2 m
20 l/s / 2 m = 10 l/(s·m)
Read from diagram 2: 31.3 W/(m·K).
Cooling effect (P) = 31.3 × 9 K × 2 m = 563 W

NB! The effect diagram applies for a nominal flow of 0.038 l/s. To obtain the right effect for other flows, read off the effect factor in diagram 3 and multiply the effect, which is read off, by this factor (see example 1).

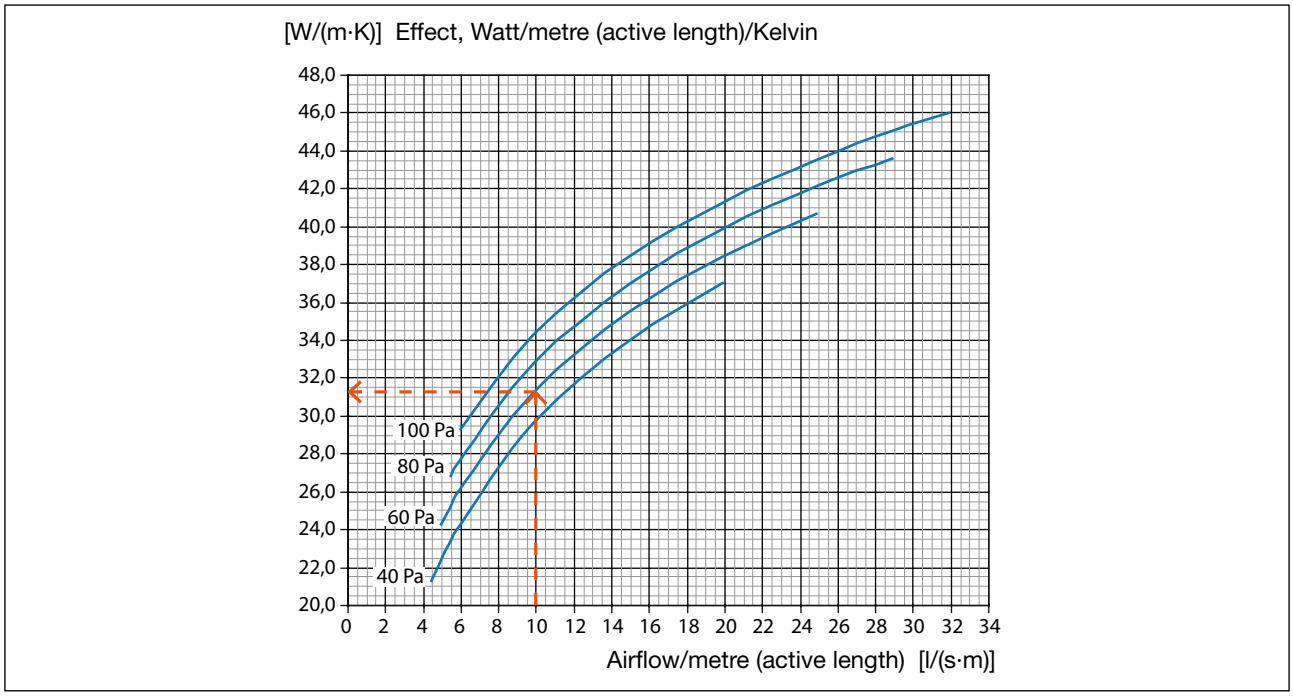

Diagram 2. Effect per active metre and Kelvin as a function of airflow per active metre at nozzle pressures of 40, 60, 80 and 100 Pa.

Dimensioning

Pressure drop in the air connection (Pa)

Table 2, below, shows the pressure drop in the connection. After calculating the necessary pressure for the supply air beam, add it to the selected static pressure in the nozzles.

Example

Architect Moon-15-100-A1 with 20 l/s and a static nozzle pressure of 60 Pa. This provides a necessary total pressure in the duct of 60 Pa + 4 Pa = 64 Pa.

Architect							
Air flow (l/s)	10	15	20	25	30	35	40
Architect ø100	2	3	4	6	7	8	9
Air flow (l/s)	40	45	50	55	60	65	
Architect ø125	3	4	5	6	7	9	

Table 2. Air pressure drop in the connection to Architect ø100 and ø125.

We reserve the right to make changes

Supply air beam Architect

Dimensioning

Flow-adjusted effect factor

Example 1

Cooling
Read off the effect on the effect diagram and calculate your flow using the following formula: $q_w = P / (C_p \times \Delta t)$

Where:
q_w = water flow [l/s]
P = effect [W]
C_p= specific heat capacity [J/(kg·K)]
Δt = temperature difference in the water circuit in/out [K]

for example q_w = 563 / (4200 x 3) = 0.045 l/s
The effect factor will then be 1.035 (see diagram 3) and the new effect P = 563 x 1.035 = 583 W.

NB! To obtain an exact value, repeat the calculation and calculate a new flow for the obtained effect. Read off a new adjustment factor, multiply it by the original effect from the effect diagram and obtain a new effect.

Example 2

Heating
What is the heating effect of a 2.4 m Architect with 20 l/s and pressure of 60 Pa?
The room's winter temperature is assumed to be 21° C
The hot water temperature in/out of Architect is 56/46° C

Answer
Temperature difference Δt = room – average water
Δt = 21 - (56+46) / 2 = 30 K
Active length = 2.4 m - 0.4 m = 2 m
20 l/s / 2 m = 10 l/(s·m)

Read off, from diagram 2: 31.3 W/(m·K).
Heating effect (P) = 31.3 × 30 K × 2 m = 1878 W

Use the calculated heating effect and calculate the water flow $q_w = P / (C_p \times \Delta t)$

Δt = temperature difference in the water circuit in/out [K]
q_w = 1878 / (4200 x 10) = 0.045 l/s

The effect factor will then be 0.83 (see diagram 3) and the new effect. P = 1878 x 0.83 = 1559 W

Using the new heating effect, a new water flow is calculated. q_w = 1559 / (4200 x10) = 0.037 l/s

Read off the effect factor at 0.79, and calculate the effect. P = 1878 x 0.79 = 1483 W

Using the new heating effect, a new water flow is calculated. q_w = 1483 / (4200 x10) = 0.035 l/s

Read off the effect factor at 0.78, and calculate the effect. P = 1878 x 0.78 = 1464 W

The heating effect is calculated to be 1464 W.

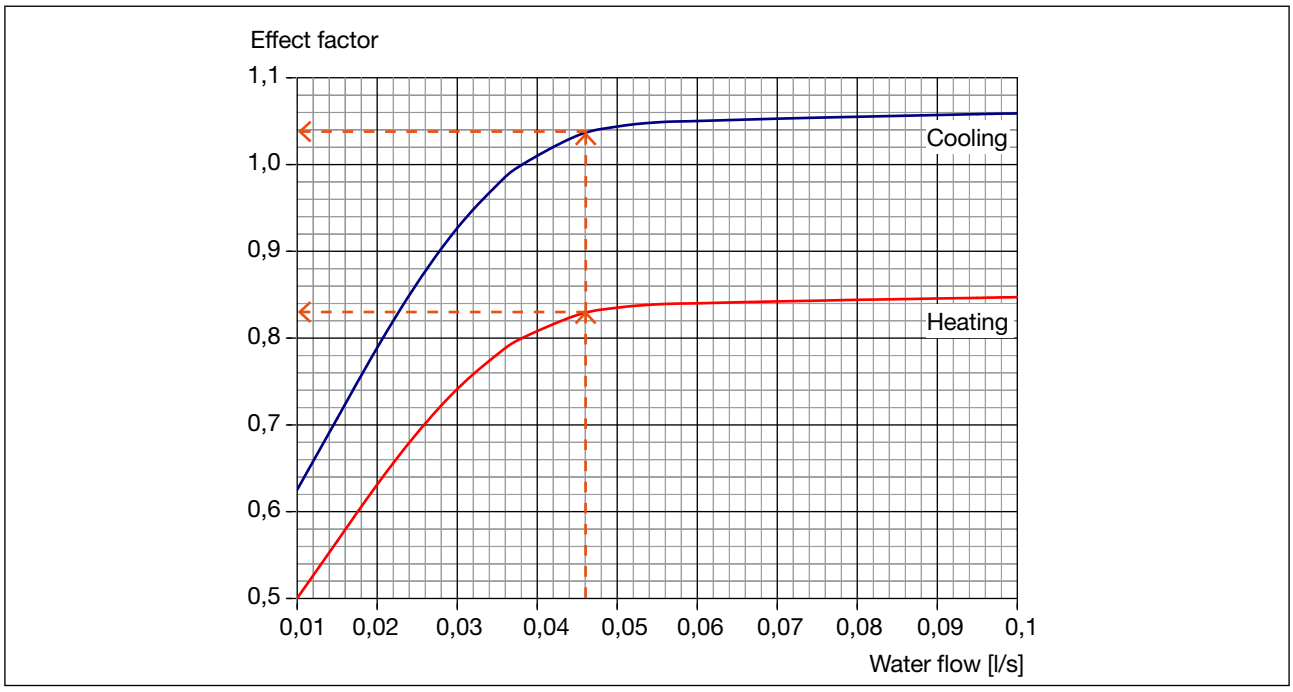

Diagram 3. Effect factor as a function of water flow.

Supply air beam Architect

Cooling effect, Architect

Drypac™, condensation protection

All Architect models can be ordered with the Drypac™ plus feature, condensation protection consisting of perlite (volcanic stone) that is applied to the fin surfaces. Drypac™ has properties that enable it to function at a supply temperature 4° C below the dew point, for continuous operation, and 5 to 8° C below the dew point for limited. Drypac™ provides both an increased effect output and increased security against condensation drips. At a working temperature above the dew point, output is reduced by 17%, but when the working temperature is below the dew point, there is no reduction in output. This means that the effect is highest when the need is greatest.

For more information about Drypac™, refer to the chapter Drypac™.

Effect data

All table values are presented with flow-adjusted effects based on the Δt for Water out-in, given in the table.

Lindab's supply air beams are Eurovent-certified and tested according to EN-15116, EN-14518.

Noise

The table below presents both the sound pressure level with 10 m² Sabine equivalent sound absorption area dB(A) and the noise level.

Nozzle pressure 60 Pa			Water															Air		
Q(m³/h)	Q(l/s)	Architect	Δt room - average water 7° C			Δt room - average water 8° C			Δt room - average water 9° C			Δt room - average water 10° C			Δt room - average water 11° C			Total pressure, duct	Noise level	Noise level
			P(W)	q(l/s)	p(kPa)	P(W)	q(l/s)	p(kPa)	P(W)	q(l/s)	p(kPa)	P(W)	q(l/s)	p(kPa)	P(W)	q(l/s)	p(kPa)	Pa	dB(A)	dB(A)
36	10	1,5	154	0,012	0,1	188	0,015	0,2	227	0,018	0,3	270	0,021	0,3	316	0,025	0,4	62	<20	<24
		1,8	192	0,015	0,2	238	0,019	0,3	289	0,023	0,5	344	0,027	0,6	399	0,032	0,8			
54	15	1,5	191	0,015	0,2	236	0,019	0,3	287	0,023	0,4	341	0,027	0,5	396	0,032	0,6	63	<20	<24
		1,8	247	0,020	0,4	308	0,025	0,5	372	0,030	0,7	437	0,035	0,9	497	0,040	1,1			
		2,4	355	0,028	0,9	435	0,035	1,3	510	0,041	1,7	579	0,046	2,1	644	0,051	2,5			
		3,0	450	0,036	1,8	536	0,043	2,4	613	0,049	3,0	685	0,055	3,7	755	0,060	4,4			
72	20	1,5	216	0,017	0,2	269	0,021	0,3	327	0,026	0,4	387	0,031	0,6	445	0,035	0,7	64	22	26
		1,8	289	0,023	0,5	359	0,029	0,7	430	0,034	0,9	497	0,040	1,1	559	0,045	1,4			
		2,4	421	0,034	1,2	506	0,040	1,7	583	0,046	2,1	654	0,052	2,6	720	0,057	3,1			
		3,0	524	0,042	2,3	611	0,049	3,0	692	0,055	3,7	770	0,061	4,5	849	0,068	5,4			
		3,6	605	0,048	3,6	697	0,056	4,7	786	0,063	5,8	874	0,070	7,0	963	0,077	8,3			
90	25	1,5	235	0,019	0,3	293	0,023	0,4	355	0,028	0,5	418	0,033	0,7	478	0,038	0,8	66	24	28
		1,8	319	0,025	0,5	395	0,031	0,8	468	0,037	1,0	536	0,043	1,3	599	0,048	1,6			
		2,4	470	0,037	1,5	557	0,044	2,0	636	0,051	2,5	708	0,056	3,0	780	0,062	3,6			
		3,0	580	0,046	2,7	671	0,053	3,5	756	0,060	4,4	841	0,067	5,3	927	0,074	6,3			
		3,6	666	0,053	4,3	763	0,061	5,5	860	0,069	6,8	957	0,076	8,2	1055	0,084	9,8			
108	30	1,8	342	0,027	0,6	421	0,034	0,9	496	0,039	1,1	564	0,045	1,4	627	0,050	1,7	67	26	30
		2,4	506	0,040	1,7	593	0,047	2,2	673	0,054	2,7	750	0,060	3,3	826	0,066	3,9			
		3,0	624	0,050	3,1	717	0,057	4,0	808	0,064	4,9	899	0,072	6,0	991	0,079	7,1			
		3,6	716	0,057	4,9	820	0,065	6,2	924	0,074	7,7	1029	0,082	9,4	1134	0,090	11,2			
126	35	1,8	363	0,029	0,7	444	0,035	0,9	520	0,041	1,2	589	0,047	1,5	653	0,052	1,8	68	27	31
		2,4	533	0,042	1,8	621	0,049	2,4	702	0,056	2,9	782	0,062	3,6	861	0,069	4,2			
		3,0	659	0,052	3,4	755	0,060	4,4	851	0,068	5,4	947	0,075	6,6	1043	0,083	7,8			
		3,6	758	0,060	5,4	869	0,069	6,9	979	0,078	8,6	1090	0,087	10,4	1201	0,096	12,5			
144	40	2,4	554	0,044	1,9	643	0,051	2,5	725	0,058	3,1	807	0,064	3,8	889	0,071	4,5	69	29	33
		3,0	686	0,055	3,7	786	0,063	4,7	886	0,071	5,8	986	0,078	7,0	1086	0,086	8,4			
		3,6	795	0,063	5,9	910	0,072	7,5	1026	0,082	9,3	1142	0,091	11,4	1258	0,100	13,6			

Table 3. Architect Ø100. Flow-adjusted effect table. Cooling circuit Δt = 3° C (Water in-out).

We reserve the right to make changes

Supply air beam Architect

Cooling effect, Architect

Nozzle pressure 80 Pa			Water															Air		
Q(m³/h)	Q(l/s)	Architect	Δt room - average water 7° C			Δt room - average water 8° C			Δt room - average water 9° C			Δt room - average water 10° C			Δt room - average water 11° C			Total pres-sure, duct	Noise level	Noise level
			P(W)	q(l/s)	p(kPa)	P(W)	q(l/s)	p(kPa)	P(W)	q(l/s)	p(kPa)	P(W)	q(l/s)	p(kPa)	P(W)	q(l/s)	p(kPa)	Pa	dB(A)	dB(A)
36	10	1,5	165	0,013	0,2	203	0,016	0,2	245	0,020	0,3	292	0,023	0,4	342	0,027	0,5	82	<20	<24
		1,8	209	0,017	0,3	260	0,021	0,4	316	0,025	0,5	375	0,030	0,7	433	0,034	0,9			
54	15	1,5	203	0,016	0,2	252	0,020	0,3	306	0,024	0,4	364	0,029	0,5	421	0,034	0,7	83	<20	<24
		1,8	265	0,021	0,4	331	0,026	0,6	399	0,032	0,8	465	0,037	1,0	526	0,042	1,2			
		2,4	385	0,031	1,1	468	0,037	1,5	544	0,043	1,9	614	0,049	2,3	679	0,054	2,8			
		3,0	488	0,039	2,0	575	0,046	2,7	654	0,052	3,4	728	0,058	4,1	803	0,064	4,9			
72	20	1,5	229	0,018	0,3	286	0,023	0,4	347	0,028	0,5	409	0,033	0,6	469	0,037	0,8	84	23	27
		1,5	308	0,025	0,5	382	0,030	0,7	455	0,036	1,0	523	0,042	1,2	585	0,047	1,5			
		2,4	450	0,036	1,4	536	0,043	1,8	613	0,049	2,3	685	0,055	2,8	755	0,060	3,3			
		3,0	558	0,044	2,6	647	0,052	3,3	730	0,058	4,1	812	0,065	5,0	895	0,071	5,9			
		3,6	645	0,051	4,1	739	0,059	5,2	833	0,066	6,4	927	0,074	7,8	1022	0,081	9,3			
90	25	1,5	249	0,020	0,3	311	0,025	0,4	377	0,030	0,6	441	0,035	0,7	502	0,040	0,9	86	25	29
		1,8	339	0,027	0,6	418	0,033	0,8	492	0,039	1,1	561	0,045	1,4	623	0,050	1,7			
		2,4	497	0,040	1,6	584	0,046	2,1	664	0,053	2,7	739	0,059	3,2	814	0,065	3,8			
		3,0	611	0,049	3,0	703	0,056	3,8	792	0,063	4,8	882	0,070	5,8	972	0,077	6,9			
		3,6	702	0,056	4,7	804	0,064	6,0	907	0,072	7,4	1009	0,080	9,1	1112	0,089	10,8			
108	30	1,5	272	0,022	0,3	339	0,027	0,5	407	0,032	0,6	474	0,038	0,8	535	0,043	1,0	87	27	31
		1,8	363	0,029	0,7	444	0,035	0,9	519	0,041	1,2	588	0,047	1,5	653	0,052	1,8			
		2,4	532	0,042	1,8	619	0,049	2,4	701	0,056	2,9	780	0,062	3,6	859	0,068	4,2			
		3,0	654	0,052	3,4	749	0,060	4,3	844	0,067	5,3	940	0,075	6,5	1035	0,082	7,7			
		3,6	751	0,060	5,3	860	0,069	6,8	970	0,077	8,4	1079	0,086	10,2	1189	0,095	12,2			
126	35	1,8	385	0,031	0,7	468	0,037	1,0	544	0,043	1,3	613	0,049	1,6	679	0,054	1,9	88	28	32
		2,4	557	0,044	2,0	647	0,052	2,6	729	0,058	3,2	812	0,065	3,8	894	0,071	4,5			
		3,0	687	0,055	3,7	786	0,063	4,7	886	0,071	5,8	987	0,079	7,1	1087	0,087	8,4			
		3,6	793	0,063	5,9	908	0,072	7,5	1024	0,082	9,3	1140	0,091	11,3	1256	0,100	13,5			
144	40	1,8	412	0,033	0,8	496	0,040	1,1	573	0,046	1,4	644	0,051	1,8	710	0,057	2,1	89	30	34
		2,4	578	0,046	2,1	668	0,053	2,7	753	0,060	3,3	838	0,067	4,0	923	0,074	4,8			
		3,0	713	0,057	3,9	817	0,065	5,0	921	0,073	6,2	1025	0,082	7,6	1129	0,090	9,0			
		3,6	829	0,066	6,3	949	0,076	8,1	1070	0,085	10,1	1191	0,095	12,3	1312	0,104	14,7			

Table 4. Architect Ø100. Flow-adjusted effect table. Cooling circuit Δt = 3° C (Water in-out).

Supply air beam Architect

Cooling effect, Architect

Nozzle pressure 100 Pa			Water															Air		
Q(m³/h)	Q(l/s)	Architect	Δt room - average water 7° C			Δt room - average water 8° C			Δt room - average water 9° C			Δt room - average water 10° C			Δt room - average water 11° C			Total pres-sure, duct	Noise level	Noise level
			P(W)	q(l/s)	p(kPa)	P(W)	q(l/s)	p(kPa)	P(W)	q(l/s)	p(kPa)	P(W)	q(l/s)	p(kPa)	P(W)	q(l/s)	p(kPa)	Pa	dB(A)	dB(A)
36	10	1,5	177	0,014	0,2	219	0,017	0,2	265	0,021	0,3	316	0,025	0,4	368	0,029	0,5	102	<20	<24
		1,8	228	0,018	0,3	284	0,023	0,5	345	0,027	0,6	407	0,032	0,8	467	0,037	1,0			
54	15	1,5	215	0,017	0,2	268	0,021	0,3	326	0,026	0,4	385	0,031	0,6	444	0,035	0,7	103	<20	<24
		1,8	285	0,023	0,5	355	0,028	0,6	425	0,034	0,9	492	0,039	1,1	554	0,044	1,4			
		2,4	417	0,033	1,2	502	0,040	1,6	579	0,046	2,1	650	0,052	2,6	716	0,057	3,0			
72	20	1,5	241	0,019	0,3	301	0,024	0,4	365	0,029	0,5	429	0,034	0,7	489	0,039	0,9	104	24	28
		1,8	327	0,026	0,6	404	0,032	0,8	478	0,038	1,1	546	0,043	1,3	609	0,048	1,6			
		2,4	478	0,038	1,5	564	0,045	2,0	644	0,051	2,5	717	0,057	3,1	789	0,063	3,6			
		3,0	592	0,047	2,8	682	0,054	3,6	769	0,061	4,5	856	0,068	5,5	943	0,075	6,5			
		3,6	684	0,054	4,5	784	0,062	5,7	884	0,070	7,1	983	0,078	8,6	1084	0,086	10,3			
90	25	1,5	262	0,021	0,3	327	0,026	0,4	394	0,031	0,6	460	0,037	0,8	521	0,041	1,0	106	26	30
		1,8	357	0,028	0,7	438	0,035	0,9	513	0,041	1,2	582	0,046	1,5	646	0,051	1,8			
		2,4	522	0,042	1,8	609	0,049	2,3	690	0,055	2,9	768	0,061	3,5	846	0,067	4,1			
		3,0	643	0,051	3,3	736	0,059	4,2	830	0,066	5,2	924	0,074	6,3	1018	0,081	7,5			
		3,6	740	0,059	5,2	847	0,067	6,6	955	0,076	8,2	1063	0,085	10,0	1171	0,093	11,9			
108	30	1,5	285	0,023	0,4	354	0,028	0,5	425	0,034	0,7	492	0,039	0,9	554	0,044	1,1	107	28	32
		1,8	380	0,030	0,7	463	0,037	1,0	539	0,043	1,3	608	0,048	1,6	673	0,054	1,9			
		2,4	554	0,044	1,9	644	0,051	2,5	726	0,058	3,1	808	0,064	3,8	890	0,071	4,5			
		3,0	681	0,054	3,6	780	0,062	4,6	880	0,070	5,7	979	0,078	7,0	1079	0,086	8,3			
		3,6	787	0,063	5,8	902	0,072	7,4	1016	0,081	9,2	1131	0,090	11,2	1246	0,099	13,4			
126	35	1,5	320	0,025	0,4	396	0,031	0,6	469	0,037	0,8	537	0,043	1,0	600	0,048	1,2	108	29	33
		1,8	402	0,032	0,8	486	0,039	1,1	563	0,045	1,4	634	0,050	1,7	699	0,056	2,0			
		2,4	579	0,046	2,1	669	0,053	2,7	754	0,060	3,3	839	0,067	4,0	924	0,074	4,8			
		3,0	713	0,057	3,9	817	0,065	5,0	921	0,073	6,2	1025	0,082	7,6	1129	0,090	9,0			
		3,6	828	0,066	6,3	948	0,075	8,1	1068	0,085	10,1	1189	0,095	12,2	1310	0,104	14,7			
144	40	1,8	429	0,034	0,9	515	0,041	1,2	591	0,047	1,5	663	0,053	1,9	730	0,058	2,2	109	31	35
		2,4	598	0,048	2,2	689	0,055	2,8	777	0,062	3,5	864	0,069	4,3	952	0,076	5,1			
		3,0	739	0,059	4,2	846	0,067	5,3	954	0,076	6,6	1062	0,085	8,1	1170	0,093	9,7			
		3,6	862	0,069	6,8	987	0,079	8,7	1113	0,089	10,8	1239	0,099	13,2	1365	0,109	15,8			

Table 5. Architect Ø100. Flow-adjusted effect table. Cooling circuit Δt = 3° C (Water in-out).

We reserve the right to make changes

Supply air beam Architect

Cooling effect, Architect

Nozzle pressure 60 Pa			Water															Air		
Q(m³/h)	Q(l/s)	Architect	Δt room - average water 7° C			Δt room - average water 8° C			Δt room - average water 9° C			Δt room - average water 10° C			Δt room - average water 11° C			Total pres-sure, duct	Noise level	Noise level
			P(W)	q(l/s)	p(kPa)	P(W)	q(l/s)	p(kPa)	P(W)	q(l/s)	p(kPa)	P(W)	q(l/s)	p(kPa)	P(W)	q(l/s)	p(kPa)	Pa	dB(A)	dB(A)
144	40	2,4	554	0,044	1,9	643	0,051	2,5	725	0,058	3,1	807	0,064	3,8	889	0,071	4,5	63	25	29
		3,0	686	0,055	3,7	786	0,063	4,7	886	0,071	5,8	986	0,078	7,0	1086	0,086	8,4			
		3,6	795	0,063	5,9	910	0,072	7,5	1026	0,082	9,3	1142	0,091	11,4	1258	0,100	13,6			
162	45	2,4	571	0,045	2,1	661	0,053	2,7	745	0,059	3,3	830	0,066	4,0	914	0,073	4,7	64	26	30
		3,0	708	0,056	3,9	811	0,065	5,0	914	0,073	6,1	1018	0,081	7,5	1121	0,089	8,9			
		3,6	825	0,066	6,3	945	0,075	8,0	1065	0,085	10,0	1186	0,094	12,2	1306	0,104	14,6			
180	50	2,4	589	0,047	2,2	679	0,054	2,8	766	0,061	3,4	852	0,068	4,2	939	0,075	5,0	65	27	31
		3,0	727	0,058	4,1	832	0,066	5,2	938	0,075	6,4	1044	0,083	7,8	1150	0,092	9,4			
		3,6	851	0,068	6,6	975	0,078	8,5	1099	0,087	10,6	1223	0,097	12,9	1347	0,107	15,4			
198	55	3,0	743	0,059	4,2	851	0,068	5,4	959	0,076	6,7	1068	0,085	8,2	1176	0,094	9,8	66	28	32
		3,6	873	0,070	7,0	1000	0,080	8,9	1127	0,090	11,1	1254	0,100	13,5	1382	0,110	16,2			
216	60	3,0	758	0,060	4,4	869	0,069	5,6	979	0,078	7,0	1090	0,087	8,5	1201	0,096	10,1	67	29	33
		3,6	892	0,071	7,2	1022	0,081	9,3	1152	0,092	11,5	1282	0,102	14,1	1412	0,112	16,9			
234	65	3,0	774	0,062	4,6	887	0,071	5,8	1000	0,080	7,2	1113	0,089	8,8	1226	0,098	10,5	69	30	34
		3,6	909	0,072	7,5	1041	0,083	9,6	1174	0,093	11,9	1306	0,104	14,6	1439	0,115	17,5			

Table 6. Architect Ø125. Flow-adjusted effect table. Cooling circuit Δt = 3° C (Water in-out).

Nozzle pressure 80 Pa			Water															Air		
Q(m³/h)	Q(l/s)	Architect	Δt room - average water 7° C			Δt room - average water 8° C			Δt room - average water 9° C			Δt room - average water 10° C			Δt room - average water 11° C			Total pres-sure, duct	Noise level	Noise level
			P(W)	q(l/s)	p(kPa)	P(W)	q(l/s)	p(kPa)	P(W)	q(l/s)	p(kPa)	P(W)	q(l/s)	p(kPa)	P(W)	q(l/s)	p(kPa)	Pa	dB(A)	dB(A)
144	40	1,8	412	0,033	0,8	496	0,040	1,1	573	0,046	1,4	644	0,051	1,8	710	0,057	2,1	83	26	30
		2,4	578	0,046	2,1	668	0,053	2,7	753	0,060	3,3	838	0,067	4,0	923	0,074	4,8			
		3,0	713	0,057	3,9	817	0,065	5,0	921	0,073	6,2	1025	0,082	7,6	1129	0,090	9,0			
		3,6	829	0,066	6,3	949	0,076	8,1	1070	0,085	10,1	1191	0,095	12,3	1312	0,104	14,7			
162	45	2,4	596	0,047	2,2	687	0,055	2,8	774	0,062	3,5	861	0,069	4,2	949	0,076	5,1	84	27	31
		3,0	736	0,059	4,2	843	0,067	5,3	950	0,076	6,6	1057	0,084	8,0	1165	0,093	9,6			
		3,6	859	0,068	6,8	843	0,078	8,6	1109	0,088	10,8	1234	0,098	13,1	1360	0,108	15,7			
180	50	2,4	613	0,049	2,3	705	0,056	3,0	795	0,063	3,7	885	0,070	4,5	975	0,078	5,3	85	28	32
		3,0	754	0,060	4,4	864	0,069	5,6	974	0,078	6,9	1084	0,086	8,4	1194	0,095	10,0			
		3,6	885	0,070	7,1	1013	0,081	9,1	1142	0,091	11,4	1271	0,101	13,9	1401	0,112	16,6			
198	55	2,4	635	0,051	2,5	727	0,058	3,1	820	0,065	3,9	912	0,073	4,7	1005	0,080	5,6	86	29	33
		3,0	771	0,061	4,5	883	0,070	5,8	996	0,079	7,2	1108	0,088	8,7	1221	0,097	10,4			
		3,6	907	0,072	7,5	1039	0,083	9,5	1171	0,093	11,9	1303	0,104	14,5	1436	0,114	17,4			
216	60	3,0	787	0,063	4,7	902	0,072	6,0	1017	0,081	7,5	1131	0,090	9,1	1247	0,099	10,9	87	30	34
		3,6	926	0,074	7,7	1061	0,084	9,9	1196	0,095	12,4	1331	0,106	15,1	1466	0,117	18,1			
234	65	3,0	804	0,064	4,9	921	0,073	6,2	1038	0,083	7,7	1155	0,092	9,4	1273	0,101	11,3	89	31	35
		3,6	944	0,075	8,0	1081	0,086	10,3	1218	0,097	12,8	1356	0,108	15,6	1494	0,119	18,7			

Table 7. Architect Ø125. Flow-adjusted effect table. Cooling circuit Δt = 3° C (Water in-out).

Supply air beam

Architect

Cooling effect, Architect

Nozzle pressure 100 Pa			Water															Air		
Q(m³/h)	Q(l/s)	Architect	Δt room - average water 7° C			Δt room - average water 8° C			Δt room - average water 9° C			Δt room - average water 10° C			Δt room - average water 11° C			Total pres-sure, duct	Noise level	Noise level
			P(W)	q(l/s)	p(kPa)	P(W)	q(l/s)	p(kPa)	P(W)	q(l/s)	p(kPa)	P(W)	q(l/s)	p(kPa)	P(W)	q(l/s)	p(kPa)	Pa	dB(A)	dB(A)
144	40	1,8	429	0,034	0,9	515	0,041	1,2	591	0,047	1,5	663	0,053	1,9	730	0,058	2,2	103	26	30
		2,4	598	0,048	0,9	689	0,055	2,8	777	0,062	3,5	864	0,069	4,3	952	0,076	5,1			
		3,0	739	0,059	4,2	846	0,067	5,3	954	0,076	6,6	1062	0,085	8,1	1170	0,093	9,7			
		3,6	862	0,069	6,8	987	0,079	8,7	1113	0,089	10,8	1239	0,099	13,2	1365	0,109	15,8			
162	45	2,4	615	0,049	2,3	707	0,056	3,0	797	0,063	3,7	887	0,071	4,5	978	0,078	5,3	104	27	31
		3,0	760	0,061	4,4	871	0,069	5,6	982	0,078	7,0	1093	0,087	8,5	1204	0,096	10,2			
		3,6	891	0,071	7,2	1021	0,081	9,2	1151	0,092	11,5	1281	0,102	14,1	1411	0,112	16,8			
180	50	2,4	634	0,050	2,5	726	0,058	3,1	819	0,065	3,9	911	0,073	4,7	1004	0,080	5,6	105	28	32
		3,0	779	0,062	4,6	892	0,071	5,9	1005	0,080	7,3	1119	0,089	8,9	1233	0,098	10,6			
		3,6	916	0,073	7,6	1049	0,084	9,7	1183	0,094	12,1	1316	0,105	14,8	1450	0,115	17,7			
198	55	2,4	653	0,052	2,6	748	0,060	3,3	843	0,067	4,1	939	0,075	5,0	1034	0,082	5,9	106	29	33
		3,0	795	0,063	4,8	911	0,073	6,1	1027	0,082	7,6	1143	0,091	9,2	1259	0,100	11,1			
		3,6	938	0,075	7,9	1074	0,086	10,1	1210	0,096	12,7	1347	0,107	15,4	1484	0,118	18,5			
216	60	2,4	677	0,054	2,8	776	0,062	3,5	875	0,070	4,4	974	0,078	5,3	1073	0,085	6,3	107	30	34
		3,0	811	0,065	5,0	929	0,074	6,3	1047	0,083	7,9	1165	0,093	9,6	1284	0,102	11,5			
		3,6	956	0,076	8,2	1095	0,087	10,5	1235	0,098	13,1	1374	0,109	16,0	1514	0,121	19,2			
234	65	3,0	828	0,066	5,1	948	0,076	6,6	1069	0,085	8,2	1190	0,095	10,0	1311	0,104	11,9	109	31	35
		3,6	973	0,077	8,5	1115	0,089	10,9	1256	0,100	13,6	1398	0,111	16,6	1541	0,123	19,9			

Table 8. Architect Ø125. Flow-adjusted effect table. Cooling circuit Δt = 3° C (Water in-out).

We reserve the right to make changes

Supply air beam Architect

Heating effect, Architect

Nozzle pressure 60 Pa			Water															Air		
Q(m³/h)	Q(l/s)	Architect	Δt room - average water 20° C			Δt room - average water 25° C			Δt room - average water 30° C			Δt room - average water 35° C			Δt room - average water 40° C			Total pres-sure, duct	Noise level	Noise level
			P(W)	q(l/s)	p(kPa)	P(W)	q(l/s)	p(kPa)	P(W)	q(l/s)	p(kPa)	P(W)	q(l/s)	p(kPa)	P(W)	q(l/s)	p(kPa)	Pa	dB(A)	dB(A)
36	10	1,5	310	0,007	0,0	414	0,010	0,0	535	0,013	0,1	677	0,016	0,1	841	0,020	0,1	62	<20	<24
		1,8	374	0,009	0,1	508	0,012	0,1	669	0,016	0,1	859	0,021	0,2	1072	0,026	0,2			
54	15	1,5	371	0,009	0,0	504	0,012	0,1	664	0,016	0,1	852	0,020	0,1	1064	0,025	0,2	63	<20	<24
		1,8	461	0,011	0,1	641	0,015	0,1	861	0,021	0,2	1111	0,027	0,3	1371	0,033	0,4			
		2,4	639	0,015	0,2	917	0,022	0,3	1236	0,030	0,4	1553	0,037	0,6	1840	0,044	0,8			
		3,0	822	0,020	0,3	1188	0,028	0,5	1560	0,037	0,8	1892	0,045	1,2	2192	0,052	1,5			
72	20	1,5	412	0,010	0,0	566	0,014	0,1	753	0,018	0,1	971	0,023	0,2	1209	0,029	0,2	64	22	26
		1,8	528	0,013	0,1	746	0,018	0,1	1008	0,024	0,2	1293	0,031	0,3	1570	0,038	0,5			
		2,4	763	0,018	0,2	1103	0,026	0,4	1462	0,035	0,6	1792	0,043	0,8	2084	0,050	1,1			
		3,0	996	0,024	0,4	1418	0,034	0,7	1807	0,043	1,1	2151	0,051	1,4	2464	0,059	1,8			
		3,6	1220	0,029	0,7	1683	0,040	1,2	2080	0,050	1,7	2442	0,058	2,2	2796	0,067	2,8			
90	25	1,5	443	0,011	0,1	613	0,015	0,1	820	0,020	0,1	1058	0,025	0,2	1310	0,031	0,3	66	24	28
		1,8	578	0,014	0,1	823	0,020	0,2	1113	0,027	0,3	1416	0,034	0,4	1699	0,041	0,5			
		2,4	867	0,021	0,2	1250	0,030	0,4	1628	0,039	0,7	1962	0,047	0,9	2264	0,054	1,2			
		3,0	1148	0,027	0,5	1601	0,038	0,9	1996	0,048	1,3	2349	0,056	1,7	2690	0,064	2,2			
		3,6	1399	0,033	0,9	1876	0,045	1,4	2286	0,055	2,0	2673	0,064	2,6	3062	0,073	3,3			
108	30	1,8	617	0,015	0,1	883	0,021	0,2	1193	0,028	0,3	1505	0,036	0,4	1791	0,043	0,6	67	26	30
		2,4	952	0,023	0,3	1362	0,033	0,5	1749	0,042	0,8	2086	0,050	1,1	2397	0,057	1,3			
		3,0	1274	0,030	0,6	1742	0,042	1,0	2147	0,051	1,4	2511	0,060	1,9	2876	0,069	2,4			
		3,6	1547	0,037	1,0	2031	0,049	1,6	2456	0,059	2,3	2873	0,069	3,0	3290	0,079	3,8			
126	35	1,8	654	0,016	0,1	940	0,022	0,2	1265	0,030	0,3	1585	0,038	0,5	1873	0,045	0,6	68	27	31
		2,4	1019	0,024	0,3	1447	0,035	0,6	1838	0,044	0,8	2182	0,052	1,1	2499	0,060	1,5			
		3,0	1377	0,033	0,7	1852	0,044	1,1	2261	0,054	1,6	2644	0,063	2,1	3028	0,072	2,7			
		3,6	1669	0,040	1,1	2162	0,052	1,8	2602	0,062	2,5	3043	0,073	3,3	3485	0,083	4,2			
144	40	2,4	1074	0,026	0,3	1514	0,036	0,6	1907	0,046	0,9	2254	0,054	1,2	2581	0,062	1,5	69	29	33
		3,0	1458	0,035	0,7	1938	0,046	1,2	2353	0,056	1,7	2752	0,066	2,2	3152	0,075	2,9			
		3,6	1767	0,042	1,3	2264	0,054	2,0	2725	0,065	2,7	3188	0,076	3,6	3651	0,087	4,6			

Table 9. Architect Ø100. Flow-adjusted effect table. Heating circuit Δt = 10° C (Water in-out).

Supply air beam Architect

Heating effect, Architect

Nozzle pressure 80 Pa			Water															Air		
Q(m³/h)	Q(l/s)	Architect	Δt room - average water 20° C			Δt room - average water 25° C			Δt room - average water 30° C			Δt room - average water 35° C			Δt room - average water 40° C			Total pres-sure, duct	Noise level	Noise level
			P(W)	q(l/s)	p(kPa)	P(W)	q(l/s)	p(kPa)	P(W)	q(l/s)	p(kPa)	P(W)	q(l/s)	p(kPa)	P(W)	q(l/s)	p(kPa)	Pa	dB(A)	dB(A)
36	10	1,5	329	0,008	0,0	442	0,011	0,1	574	0,014	0,1	731	0,017	0,1	910	0,022	0,1	82	<20	<24
		1,8	401	0,010	0,1	549	0,013	0,1	729	0,017	0,1	939	0,022	0,2	1170	0,028	0,3			
54	15	1,5	392	0,009	0,0	535	0,013	0,1	708	0,017	0,1	911	0,022	0,1	1136	0,027	0,2	83	<20	<24
		1,8	491	0,012	0,1	688	0,016	0,1	927	0,022	0,2	1194	0,029	0,3	1463	0,035	0,4			
		2,4	694	0,017	0,2	1001	0,024	0,3	1341	0,032	0,5	1666	0,040	0,7	1955	0,047	0,9			
		3,0	908	0,022	0,3	1305	0,031	0,6	1688	0,040	1,0	2023	0,048	1,3	2330	0,056	1,7			
72	20	1,5	434	0,010	0,0	599	0,014	0,1	800	0,019	0,1	1033	0,025	0,2	1281	0,031	0,3	84	23	27
		1,8	560	0,013	0,1	796	0,019	0,2	1076	0,026	0,2	1373	0,033	0,4	1655	0,040	0,5			
		2,4	822	0,020	0,2	1187	0,028	0,4	1559	0,037	0,6	1891	0,045	0,9	2191	0,052	1,2			
		3,0	1085	0,026	0,5	1187	0,036	0,8	1920	0,046	1,2	2268	0,054	1,6	2598	0,062	2,0			
		3,6	1334	0,032	0,8	1807	0,043	1,3	2213	0,053	1,9	2589	0,062	2,5	2965	0,071	3,2			
90	25	1,5	466	0,011	0,1	649	0,015	0,1	871	0,021	0,1	1124	0,027	0,2	1385	0,033	0,3	86	25	29
		1,8	612	0,015	0,1	876	0,021	0,2	1183	0,028	0,3	1494	0,036	0,4	1780	0,043	0,6			
		2,4	929	0,022	0,3	1333	0,032	0,5	1717	0,041	0,8	2053	0,049	1,0	2362	0,056	1,3			
		3,0	1236	0,030	0,6	1701	0,041	1,0	2106	0,050	1,4	2463	0,059	1,8	2821	0,067	2,3			
		3,6	1507	0,036	1,0	1988	0,048	1,6	2409	0,058	2,2	2817	0,067	2,9	3227	0,077	3,7			
108	30	1,5	501	0,012	0,1	703	0,017	0,1	949	0,023	0,2	1221	0,029	0,2	1492	0,036	0,3	87	27	31
		1,8	653	0,016	0,1	939	0,022	0,2	1264	0,030	0,3	1583	0,038	0,5	1871	0,045	0,6			
		2,4	1015	0,024	0,3	1443	0,034	0,6	1833	0,044	0,8	2177	0,052	1,1	2494	0,060	1,4			
		3,0	1361	0,033	0,7	1835	0,044	1,1	2243	0,054	1,6	2623	0,063	2,1	3005	0,072	2,6			
		3,6	1648	0,039	1,1	2141	0,051	1,8	2577	0,062	2,5	3014	0,072	3,3	3452	0,082	4,2			
126	35	1,8	693	0,017	0,1	1000	0,024	0,2	1340	0,032	0,3	1664	0,040	0,5	1954	0,047	0,7	88	28	32
		2,4	1084	0,026	0,4	1526	0,036	0,6	1919	0,046	0,9	2267	0,054	1,2	2596	0,062	1,6			
		3,0	1460	0,035	0,7	1940	0,046	1,2	2355	0,056	1,7	2755	0,066	2,2	3155	0,075	2,9			
		3,6	1763	0,042	1,3	2260	0,054	1,9	2720	0,065	2,7	3182	0,076	3,6	3644	0,087	4,6			
144	40	1,8	745	0,018	0,1	1076	0,026	0,2	1431	0,034	0,4	1760	0,042	0,6	2052	0,049	0,7	89	30	34
		2,4	1141	0,027	0,4	1593	0,038	0,7	1988	0,047	1,0	2340	0,056	1,3	2680	0,064	1,6			
		3,0	1540	0,037	0,8	2023	0,048	1,3	2447	0,058	1,8	2862	0,068	2,4	3278	0,078	3,1			
		3,6	1857	0,044	1,4	2362	0,056	2,1	2843	0,068	2,9	3325	0,079	3,9	3808	0,091	5,0			

Table 10. Architect Ø100. Flow-adjusted effect table. Heating circuit Δt = 10° C (Water in-out).

We reserve the right to make changes

Supply air beam Architect

Heating effect, Architect

Nozzle pressure 100 Pa			Water															Air		
Q(m³/h)	Q(l/s)	Architect	Δt room - average water 20° C			Δt room - average water 25° C			Δt room - average water 30° C			Δt room - average water 35° C			Δt room - average water 40° C			Total pres-sure, duct	Noise level	Noise level
			P(W)	q(l/s)	p(kPa)	P(W)	q(l/s)	p(kPa)	P(W)	q(l/s)	p(kPa)	P(W)	q(l/s)	p(kPa)	P(W)	q(l/s)	p(kPa)	Pa	dB(A)	dB(A)
36	10	1,5	350	0,008	0,0	472	0,011	0,1	617	0,015	0,1	789	0,019	0,1	984	0,024	0,2	102	<20	<24
		1,8	432	0,010	0,1	596	0,014	0,1	796	0,019	0,2	1027	0,025	0,2	1274	0,030	0,3			
54	15	1,5	411	0,010	0,0	565	0,013	0,1	751	0,018	0,1	969	0,023	0,2	1205	0,029	0,2	103	<20	<24
		1,8	522	0,012	0,1	736	0,018	0,1	995	0,024	0,2	1277	0,030	0,3	1553	0,037	0,4			
		2,4	755	0,018	0,2	1092	0,026	0,4	1449	0,035	0,6	1779	0,042	0,8	2070	0,049	1,0			
72	20	1,5	453	0,011	0,1	629	0,015	0,1	843	0,020	0,1	1089	0,026	0,2	1345	0,032	0,3	104	24	28
		1,8	591	0,014	0,1	844	0,020	0,2	1141	0,027	0,3	1447	0,035	0,4	1732	0,041	0,5			
		2,4	884	0,021	0,3	1273	0,030	0,5	1653	0,039	0,7	1988	0,047	1,0	2292	0,055	1,2			
		3,0	1180	0,028	0,5	1637	0,039	0,9	2034	0,049	1,3	2390	0,057	1,7	2737	0,065	2,2			
		3,6	1454	0,035	0,9	1933	0,046	1,5	2348	0,056	2,1	2746	0,066	2,7	3145	0,075	3,5			
90	25	1,5	486	0,012	0,1	679	0,016	0,1	915	0,022	0,1	1179	0,028	0,2	1446	0,035	0,3	106	26	30
		1,8	643	0,015	0,1	924	0,022	0,2	1244	0,030	0,3	1562	0,037	0,4	1849	0,044	0,6			
		2,4	991	0,024	0,3	1412	0,034	0,5	1801	0,043	0,8	2145	0,051	1,1	2457	0,059	1,4			
		3,0	1326	0,032	0,6	1799	0,043	1,1	2205	0,053	1,5	2579	0,062	2,0	2953	0,071	2,5			
		3,6	1615	0,039	1,1	2108	0,050	1,7	2537	0,061	2,4	2967	0,071	3,2	3399	0,081	4,0			
108	30	1,5	522	0,012	0,1	736	0,018	0,1	994	0,024	0,2	1276	0,030	0,3	1552	0,037	0,3	107	28	32
		1,8	684	0,016	0,1	987	0,024	0,2	1323	0,032	0,3	1647	0,039	0,5	1936	0,046	0,6			
		2,4	1076	0,026	0,3	1516	0,036	0,6	1909	0,046	0,9	2256	0,054	1,2	2584	0,062	1,5			
		3,0	1445	0,035	0,7	1924	0,046	1,2	2337	0,056	1,7	2734	0,065	2,2	3131	0,075	2,8			
		3,6	1747	0,042	1,2	2243	0,054	1,9	2700	0,064	2,7	3158	0,075	3,5	3617	0,086	4,5			
126	35	1,5	579	0,014	0,1	825	0,020	0,1	1116	0,027	0,2	1419	0,034	0,3	1702	0,041	0,4	108	29	33
		1,8	726	0,017	0,1	1049	0,025	0,2	1399	0,033	0,4	1726	0,041	0,5	2017	0,048	0,7			
		2,4	1143	0,027	0,4	1595	0,038	0,7	1990	0,048	1,0	2343	0,056	1,3	2683	0,064	1,6			
		3,0	1539	0,037	0,8	2022	0,048	1,3	2446	0,058	1,8	2861	0,068	2,4	3277	0,078	3,1			
		3,6	1854	0,044	1,4	2359	0,056	2,1	2839	0,068	2,9	3320	0,079	3,9	3803	0,091	5,0			
144	40	1,8	779	0,019	0,1	1127	0,027	0,3	1490	0,036	0,4	1821	0,043	0,6	2120	0,051	0,8	109	31	35
		2,4	1198	0,029	0,4	1658	0,040	0,7	2055	0,049	1,0	2413	0,058	1,4	2764	0,066	1,7			
		3,0	1613	0,039	0,9	2106	0,050	1,4	2535	0,061	1,9	2965	0,071	2,6	3396	0,081	3,3			
		3,6	1942	0,046	1,5	2457	0,059	2,3	2957	0,071	3,1	3459	0,083	4,2	3961	0,095	5,4			

Table 11. Architect Ø100. Flow-adjusted effect table. Heating circuit Δt = 10° C (Water in-out).

Nozzle pressure 60 Pa			Water															Air		
Q(m³/h)	Q(l/s)	Architect	Δt room - average water 20° C			Δt room - average water 25° C			Δt room - average water 30° C			Δt room - average water 35° C			Δt room - average water 40° C			Total pres-sure, duct	Noise level	Noise level
			P(W)	q(l/s)	p(kPa)	P(W)	q(l/s)	p(kPa)	P(W)	q(l/s)	p(kPa)	P(W)	q(l/s)	p(kPa)	P(W)	q(l/s)	p(kPa)	Pa	dB(A)	dB(A)
144	40	2,4	1074	0,026	0,3	1514	0,036	0,6	1907	0,046	0,9	2254	0,054	1,2	2581	0,062	1,5	63	25	29
		3,0	1458	0,035	0,7	1938	0,046	1,2	2353	0,056	1,7	2752	0,066	2,2	3152	0,075	2,9			
		3,6	1767	0,042	1,3	2264	0,054	2,0	2725	0,065	2,7	3188	0,076	3,6	3651	0,087	4,6			
162	45	2,4	1122	0,027	0,4	1572	0,038	0,6	1966	0,047	1,0	2316	0,055	1,3	2653	0,063	1,6	64	26	30
		3,0	1524	0,036	0,8	2007	0,048	1,3	2429	0,058	1,8	2841	0,068	2,4	3254	0,078	3,0			
		3,6	1848	0,044	1,4	2351	0,056	2,1	2830	0,068	2,9	3310	0,079	3,9	3791	0,091	4,9			
180	50	2,4	1171	0,028	0,4	1628	0,039	0,7	2024	0,048	1,0	2379	0,057	1,3	2725	0,065	1,7	65	27	31
		3,0	1578	0,038	0,8	2063	0,049	1,3	2493	0,060	1,9	2915	0,070	2,5	3339	0,080	3,2			
		3,6	1914	0,046	1,5	2425	0,058	2,2	2919	0,070	3,1	3414	0,082	4,1	3910	0,093	5,2			
198	55	3,0	1625	0,039	0,9	2118	0,051	1,4	2549	0,061	2,0	2981	0,071	2,6	3414	0,082	3,3	66	28	32
		3,6	1969	0,047	1,5	2488	0,059	2,3	2994	0,072	3,2	3502	0,084	4,3	4011	0,096	5,5			
216	60	3,0	1669	0,040	0,9	2161	0,052	1,5	2602	0,062	2,0	3043	0,073	2,7	3485	0,083	3,4	67	29	33
		3,6	2015	0,048	1,6	2542	0,061	2,4	3060	0,073	3,3	3579	0,085	4,4	4099	0,098	5,7			
234	65	3,0	1712	0,041	1,0	2207	0,053	1,5	2656	0,063	2,1	3106	0,074	2,8	3558	0,085	3,6	69	30	34
		3,6	2056	0,049	1,6	2591	0,062	2,5	3118	0,074	3,5	3647	0,087	4,6	4177	0,100	5,9			

Table 12. Architect Ø125. Flow-adjusted effect table. Heating circuit Δt = 10° C (Water in-out).

Supply air beam Architect

Heating effect, Architect

Nozzle pressure 80 Pa			Water															Air		
Q(m³/h)	Q(l/s)	Architect	Δt room - average water 20° C			Δt room - average water 25° C			Δt room - average water 30° C			Δt room - average water 35° C			Δt room - average water 40° C			Total pres-sure, duct	Noise level	Noise level
			P(W)	q(l/s)	p(kPa)	P(W)	q(l/s)	p(kPa)	P(W)	q(l/s)	p(kPa)	P(W)	q(l/s)	p(kPa)	P(W)	q(l/s)	p(kPa)	Pa	dB(A)	dB(A)
144	40	1,8	745	0,018	0,1	1076	0,026	0,2	1431	0,034	0,4	1760	0,042	0,6	2052	0,049	0,7	83	26	30
		2,4	1141	0,027	0,4	1593	0,038	0,7	1988	0,047	1,0	2340	0,056	1,3	2680	0,064	1,6			
		3,0	1540	0,037	0,8	2023	0,048	1,3	2447	0,058	1,8	2862	0,068	2,4	3278	0,078	3,1			
		3,6	1857	0,044	1,4	2362	0,056	2,1	2843	0,068	2,9	3325	0,079	3,9	3808	0,091	5,0			
162	45	2,4	1191	0,028	0,4	1650	0,039	0,7	2047	0,049	1,0	2405	0,057	1,4	2754	0,066	1,7	84	27	31
		3,0	1604	0,038	0,9	2090	0,050	1,4	2523	0,060	1,9	2951	0,071	2,5	3380	0,081	3,3			
		3,6	1934	0,046	1,5	2448	0,058	2,2	2947	0,070	3,1	3446	0,082	4,2	3947	0,094	5,3			
180	50	2,4	1243	0,030	0,4	1708	0,041	0,7	2113	0,050	1,1	2471	0,059	1,4	2830	0,068	1,8	85	28	32
		3,0	1657	0,040	0,9	2150	0,051	1,4	2588	0,062	2,0	3027	0,072	2,7	3467	0,083	3,4			
		3,6	1998	0,048	1,6	2522	0,060	2,4	3035	0,073	3,3	3550	0,085	4,4	4066	0,097	5,6			
198	55	2,4	1302	0,031	0,5	1772	0,042	0,8	2178	0,052	1,1	2547	0,061	1,5	2917	0,070	1,9	86	29	33
		3,0	1704	0,041	1,0	2198	0,053	1,5	2646	0,063	2,1	3094	0,074	2,8	3544	0,085	3,6			
		3,6	2051	0,049	1,6	2585	0,062	2,5	3111	0,074	3,4	3639	0,087	4,6	4167	0,100	5,9			
216	60	3,0	1748	0,042	1,0	2244	0,054	1,6	2701	0,065	2,2	3159	0,075	2,9	3618	0,086	3,7	87	30	34
		3,6	2104	0,050	1,7	2640	0,063	2,6	3177	0,076	3,6	3716	0,089	4,8	4256	0,102	6,1			
234	65	3,0	1793	0,043	1,1	2292	0,055	1,6	2758	0,066	2,3	3226	0,077	3,0	3695	0,088	3,8	89	31	35
		3,6	2144	0,051	1,8	2689	0,064	2,6	3237	0,077	3,7	3786	0,090	4,9	4336	0,104	6,3			

Table 13. Architect Ø125. Flow-adjusted effect table. Heating circuit Δt = 10° C (Water in-out).

Nozzle pressure 100 Pa			Water															Air		
Q(m³/h)	Q(l/s)	Architect	Δt room - average water 20° C			Δt room - average water 25° C			Δt room - average water 30° C			Δt room - average water 35° C			Δt room - average water 40° C			Total pres-sure, duct	Noise level	Noise level
			P(W)	q(l/s)	p(kPa)	P(W)	q(l/s)	p(kPa)	P(W)	q(l/s)	p(kPa)	P(W)	q(l/s)	p(kPa)	P(W)	q(l/s)	p(kPa)	Pa	dB(A)	dB(A)
144	40	1,8	779	0,019	0,1	1127	0,027	0,3	1490	0,036	0,4	1821	0,043	0,6	2120	0,051	0,8	103	26	30
		2,4	1198	0,029	0,4	1658	0,040	0,7	2055	0,049	1,0	2413	0,058	1,4	2764	0,066	1,7			
		3,0	1613	0,039	0,9	2106	0,050	1,4	2535	0,061	1,9	2965	0,071	2,6	3396	0,081	3,3			
		3,6	1942	0,046	1,5	2457	0,059	2,3	2957	0,071	3,1	3459	0,083	4,2	3961	0,095	5,4			
162	45	2,4	1248	0,030	0,4	1714	0,041	0,8	2118	0,051	1,1	2478	0,059	1,4	2838	0,068	1,8	104	27	31
		3,0	1674	0,040	0,9	2167	0,052	1,5	2608	0,062	2,0	3051	0,073	2,7	3494	0,083	3,5			
		3,6	2014	0,048	1,6	2540	0,061	2,4	3057	0,073	3,3	3576	0,085	4,4	4096	0,098	5,7			
180	50	2,4	1299	0,031	0,5	1770	0,042	0,8	2175	0,052	1,1	2544	0,061	1,5	2914	0,070	1,9	105	28	32
		3,0	1724	0,041	1,0	2219	0,053	1,5	2671	0,064	2,1	3124	0,075	2,8	3578	0,085	3,6			
		3,6	2073	0,050	1,7	2611	0,062	2,5	3143	0,075	3,5	3676	0,088	4,7	4210	0,101	6,0			
198	55	2,4	1359	0,032	0,5	1833	0,044	0,8	2241	0,054	1,2	2621	0,063	1,6	3002	0,072	2,0	106	29	33
		3,0	1769	0,042	1,0	2266	0,054	1,6	2727	0,065	2,2	3190	0,076	2,9	3654	0,087	3,8			
		3,6	2130	0,051	1,8	2672	0,064	2,6	3216	0,077	3,7	3761	0,090	4,9	4308	0,103	6,3			
216	60	2,4	1433	0,034	0,6	1911	0,046	0,9	2324	0,056	1,3	2718	0,065	1,7	3113	0,074	2,2	107	30	34
		3,0	1811	0,043	1,1	2311	0,055	1,6	2782	0,066	2,3	3254	0,078	3,0	3727	0,089	3,9			
		3,6	2172	0,052	1,8	2725	0,065	2,7	3280	0,078	3,8	3836	0,092	5,1	4394	0,105	6,5			
234	65	3,0	1855	0,044	1,1	2359	0,056	1,7	2840	0,068	2,4	3321	0,079	3,2	3804	0,091	4,0	109	31	35
		3,6	2211	0,053	1,9	2774	0,066	2,8	3338	0,080	3,9	3905	0,093	5,2	4472	0,107	6,7			

Table 14. Architect Ø125. Flow-adjusted effect table. Heating circuit Δt = 10° C (Water in-out).

We reserve the right to make changes

Supply air beam

Architect

Couplings & connections

Architect is supplied in lengths from 1.2m to 3.6 m, in steps of 0.1 m. The connection dimension is 15 mm for the water and 100 mm and 125 mm for the air for Architect Moon, Wing and Facet.

Architect is available with a large number of coupling options. This is how to find the designation, for the coupling option you require for Architect:

Step 1.
Indicate the position for the ventilation connection.

Step 2.
Indicate the position for the pipe connection.

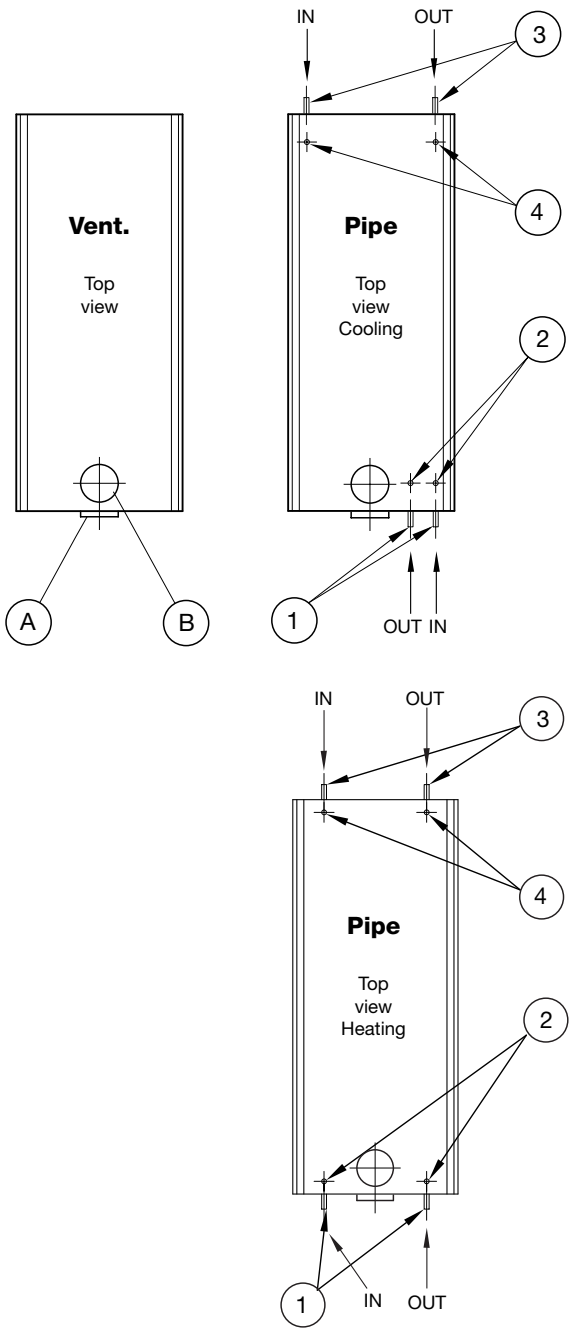

Figure 1. Coupling and connection options.

Examples of designations

Below are examples of common coupling options: Type A1 has a horizontal air connection at the end, and a horizontal pipe connection at the same end of the beam.

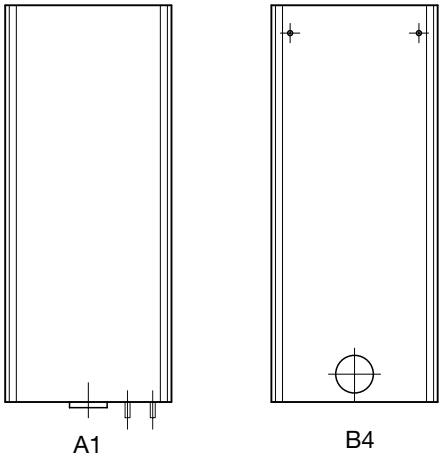

Figure 2. Coupling options A1 and B4.

Supply air beam Architect

Connection dimensions, Ø100 mm cooling

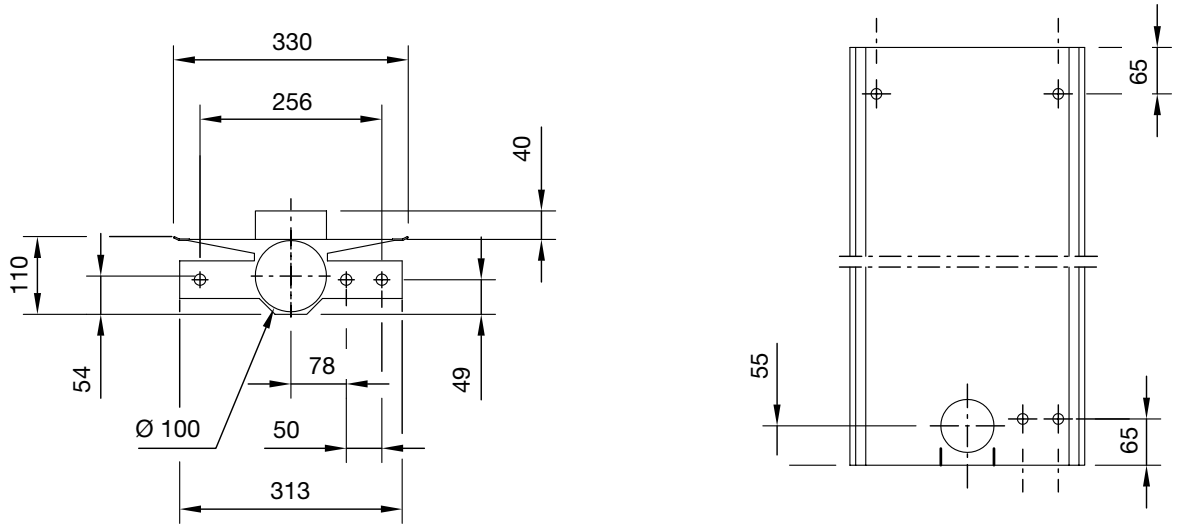

Figure 3. Architect Ø100 mm, cooling. Dimensions for the parts. Total width and length for the respective models vary (see table 15).

Connection dimensions, Ø100 mm heating

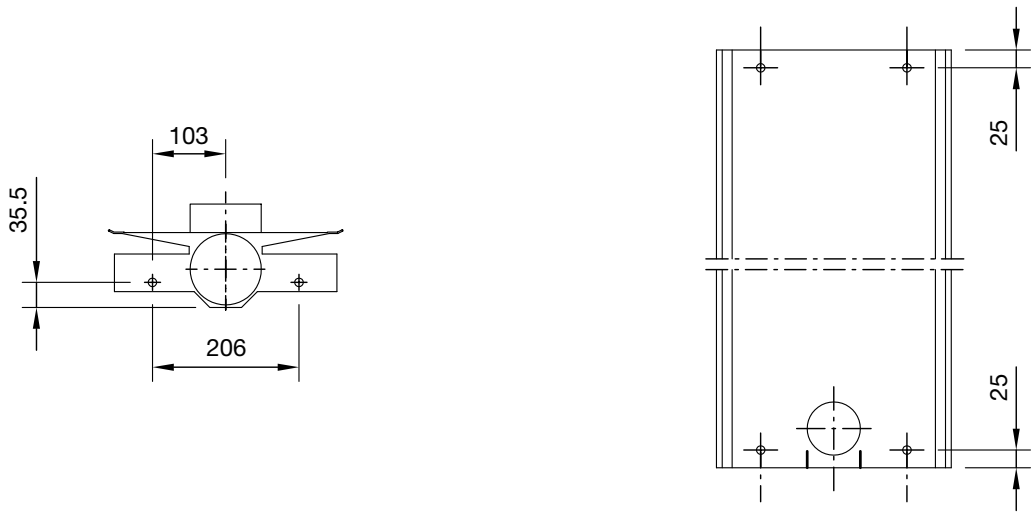

Figure 4. Architect Ø100 mm, heating. Dimensions for the parts. Total width and length for the respective models vary (see table 15).

We reserve the right to make changes

Supply air beam

Architect

Suspension, Ø100 mm connection

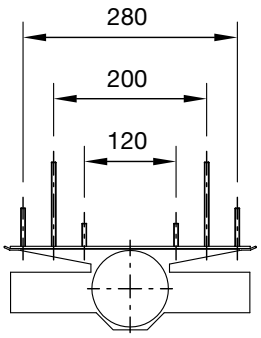

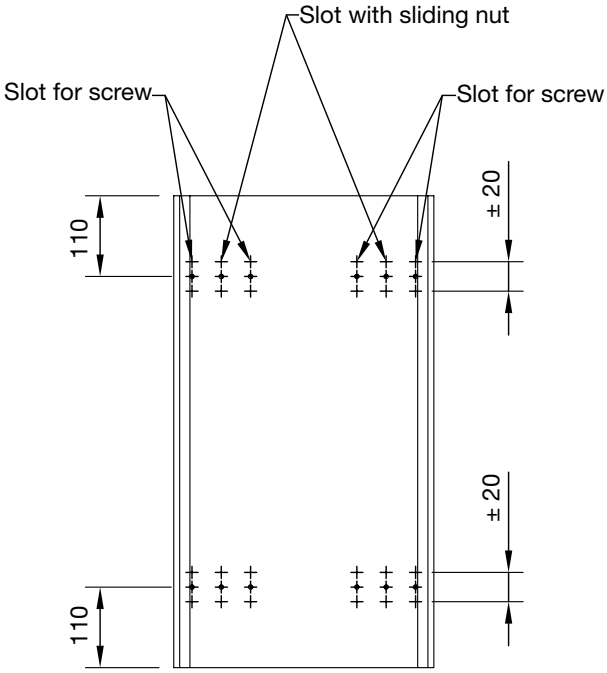

Table 5. Architect Ø100 mm, suspension / dimensions.

Supply air beam Architect

1 2 3 4 5 6 7 8 9 10 11 12 13 14 15 16 17 18 19

Connection dimensions, Ø125 mm cooling

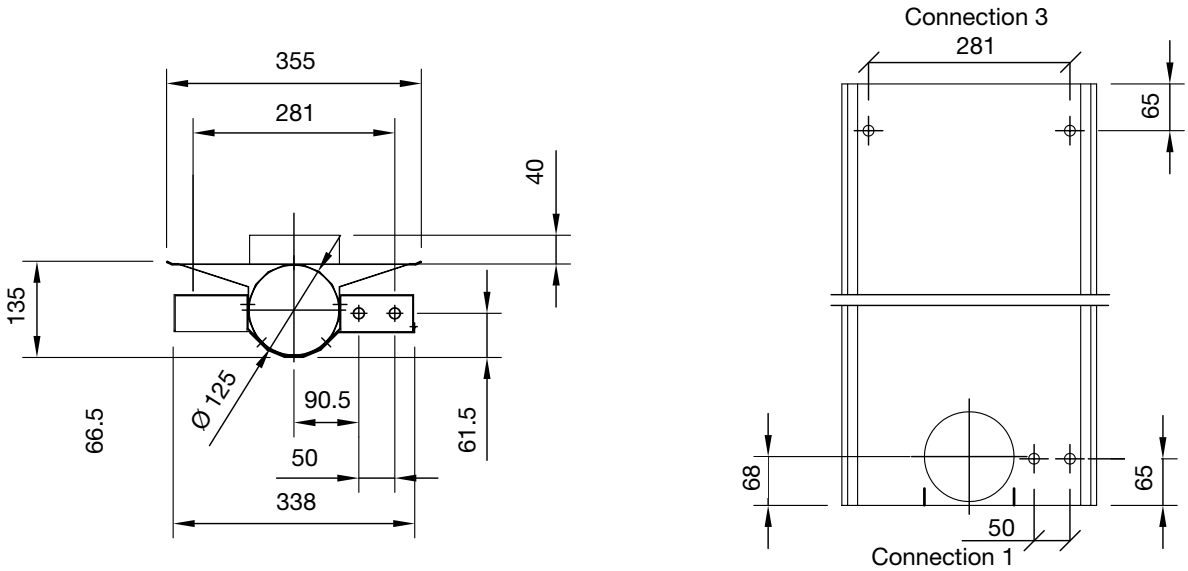

Figure 6. Architect Ø125 mm, cooling. Dimensions for the parts. Total width and length for the respective models vary (see table 15).

Connection dimensions, Ø125 mm heating

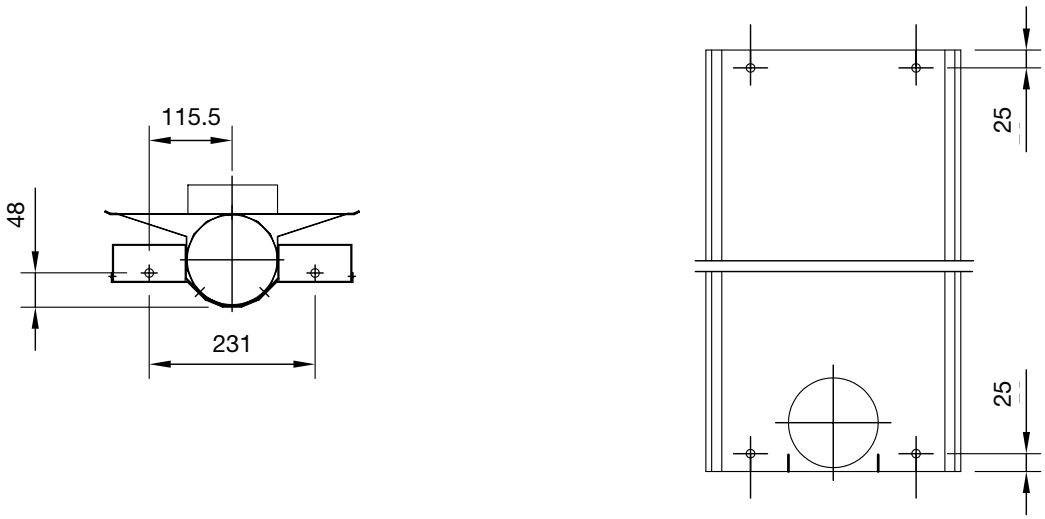

Figure 7. Architect Ø125 mm, heating. Dimensions for the parts. Total width and length for the respective models vary (see table 15).

We reserve the right to make changes

Supply air beam

Architect

Suspension, Ø125 mm connection

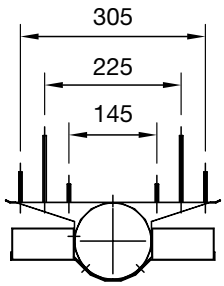

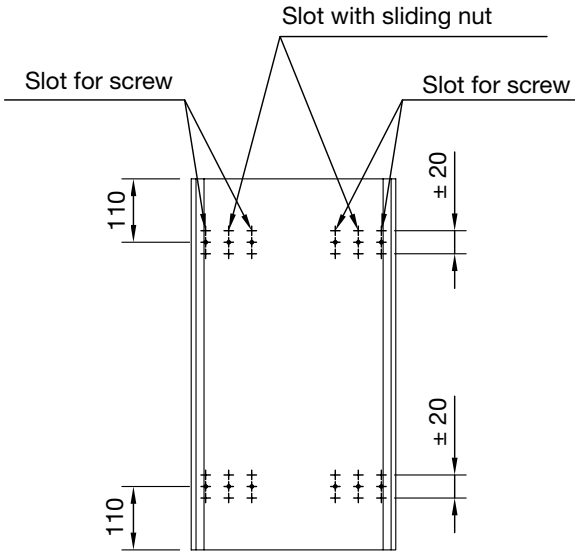

Figure 8. Architect Ø125 mm, suspension / dimensions.

Supply air beam Architect

Dimensions, weight & water content

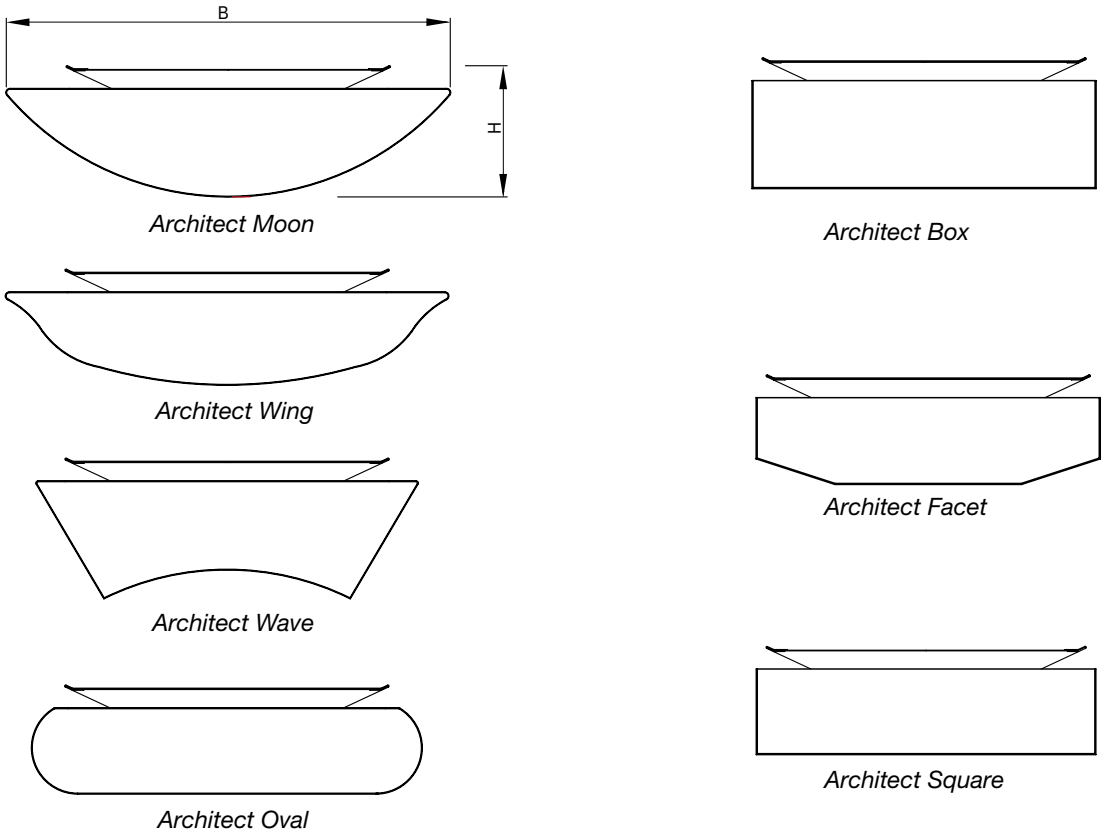

Figure 9. Architect's different versions.

Model	Ø	Width, mm	Height, mm	Product length undersize, mm	Weight, kg/m	Water content, l/m
Moon	100	452	133	0*	10.5	0.65
Moon	125	490	151	0*	10.5	0.65
Wing	100	452	118	0*	10.5	0.65
Wave	100	389	143	0*	10.5	0.65
Oval	100	398	111	0*	10.5	0.65
Oval	125	446	138	0*	10.5	0.65
Box	100	350	133	- 8**	10.5	0.65
Facet	100	350	111	- 8**	10.5	0.65
Facet	125	375	137	- 8**	10.5	0.65
Square	100	350	111	- 8**	10.5	0.65

* The outer cover extends 4 mm beyond the end edges on each side. ** The end edges are folded over the cover.

Table 15. Dimensions, weight and water content of the outer cover. Architect's total length is the ordered length minus undersize.

We reserve the right to make changes

Supply air beam

Architect

Installation examples

Architect is usually installed on to the ceiling or suspended from it. Pictures 11 and 13 show the beam during installation. Pictures 12 and 14 show a complete installation.

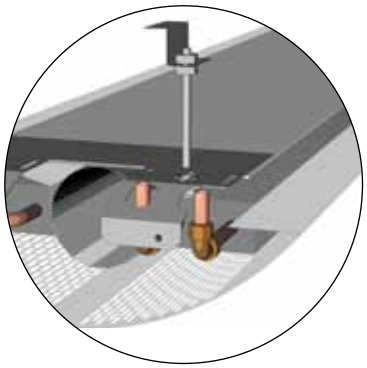

Picture 11. Suspension with screws or threaded rods.

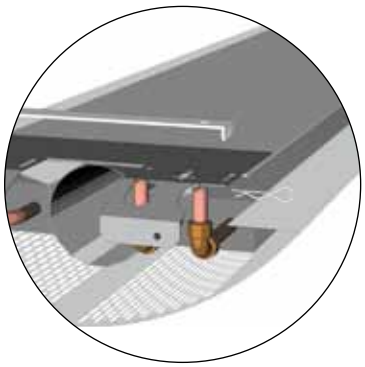

Picture 13. Suspension with brackets.

Standard accessories include an M6 nut, which can slide lengthwise, and which fits into an oval slot, for attachment with screws. If installation with brackets is required, this must be specified in the order.

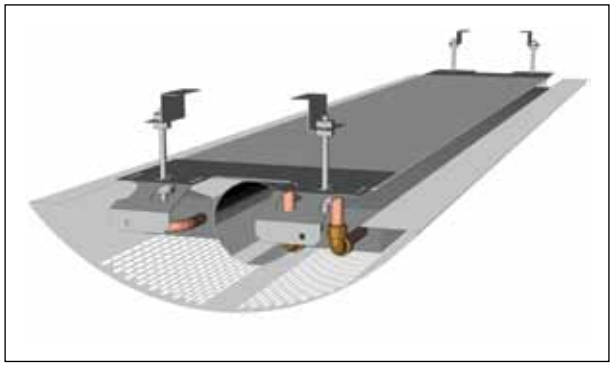

Picture 12. Architect installed with threaded rods that are screwed into a nut that can slide lengthwise in the beam.

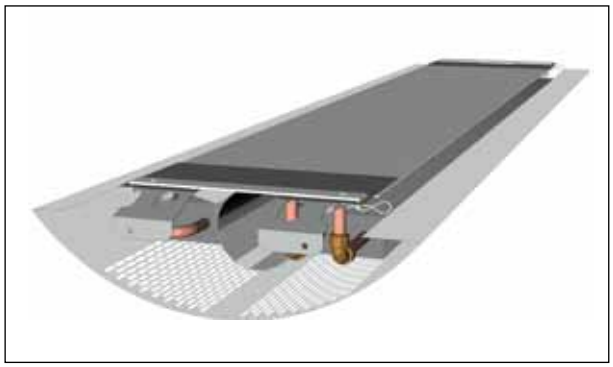

Picture 14. Architect installed with cotter pins that are inserted into brackets attached to the ceiling.

Supply air beam

Architect

Extended cover / Cover

For installation with horizontal air and water connections, the connection pipes can be concealed, using one of four alternative options, depending on the placement and attachment options.

Options:

1.- Extended cover with wall attachments (see fig. 11). Maximum length: 3.6 m.

2.- Extended cover with ceiling attachments (see fig. 12). Maximum length: 3.6 m.

3.- Cover with attachments for both wall and ceiling (see fig. 13).

4.- Cover with ceiling attachments (see fig. 14).

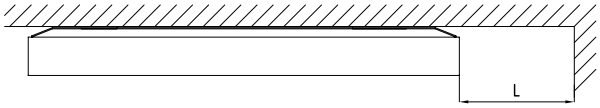

Figure 10. Ordered length.

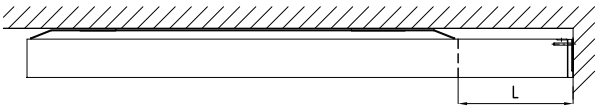

Figure 11. Extended cover with wall attachments.

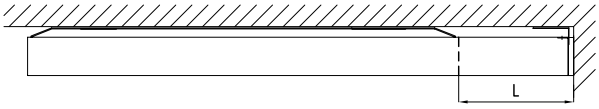

Figure 12. Extended cover with ceiling attachments.

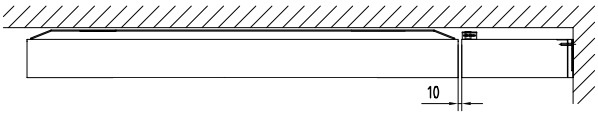

Figure 13. Cover with attachments for both wall and ceiling.

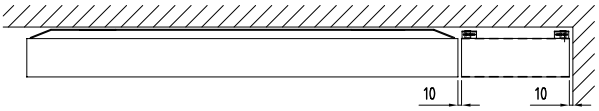

Figure 14. Cover with ceiling attachments.

We reserve the right to make changes

Supply air beam Architect

Distribution diagrams, Architect

The measurements are performed with cooled air supply (Δt room air – supply air) of 5° C and cooling in the water circuit (Δt – room air – average water temperature) of 8° C. All heat supplied through the walls (the V test method).

For distribution diagrams, where the nozzles have an angle of 30°, the short ends of the beams should not be closer than 1.2 m from each other, if the air velocities given below are to apply.

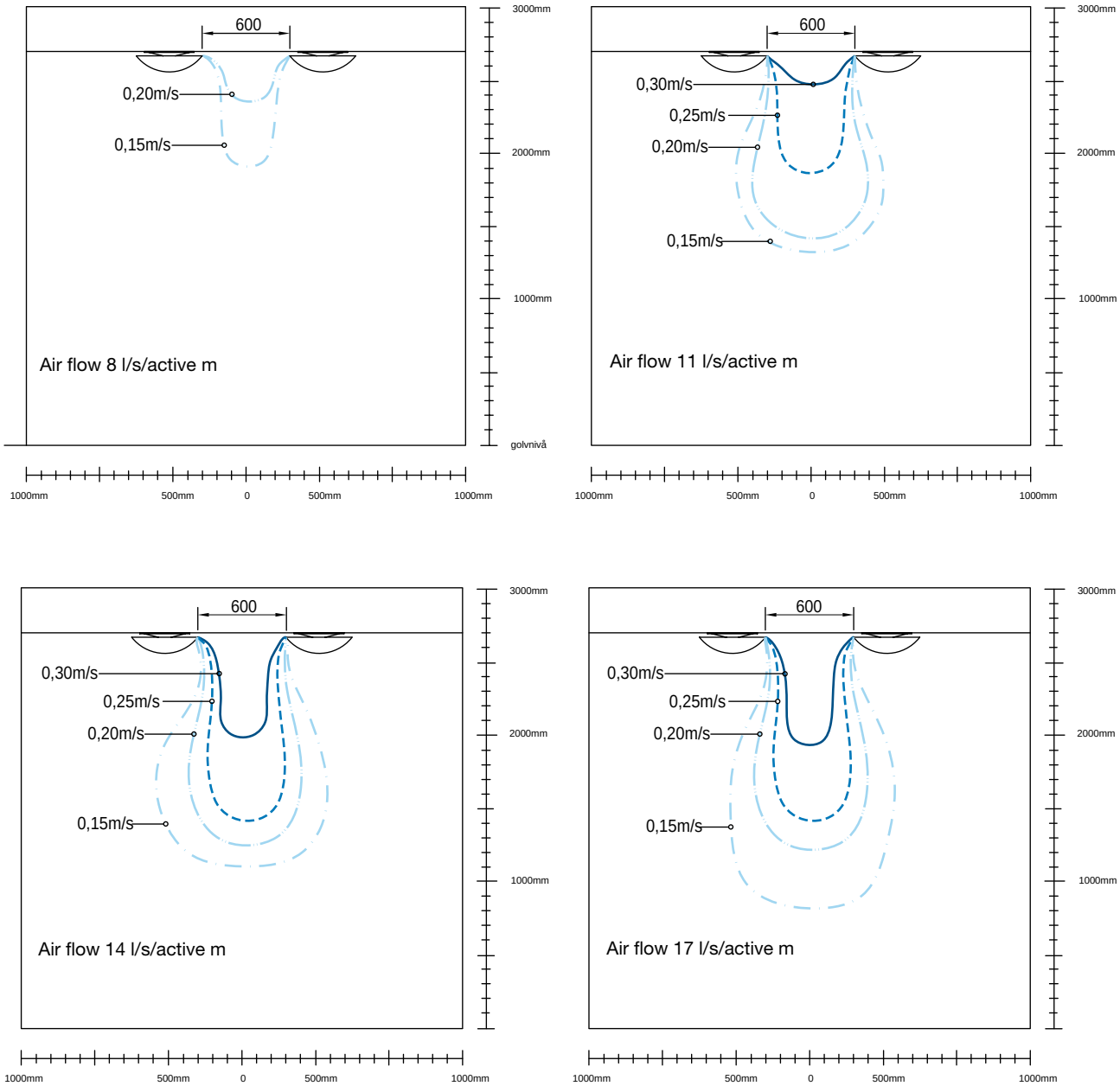

Figure 15-18. Air velocities between supply air beams at a separation of 600 mm. Standard distribution profile (nozzles at a 30° angle). Nozzle pressure of 60 Pa. If additional rows of beams are installed closer than 1.2 m from each other, the distribution patterns shown above will change.

Supply air beam Architect

Distribution diagrams, Architect

The measurements are performed with cooled air supply (Δt room air – supply air) of 5° C and cooling in the water circuit (Δt – room air – average water temperature) of 8° C. All heat supplied through the walls (the V test method).

For distribution diagrams, where the nozzles have an angle of 30°, the short ends of the beams should not be closer than 1.2 m from each other, if the air velocities given below are to apply.

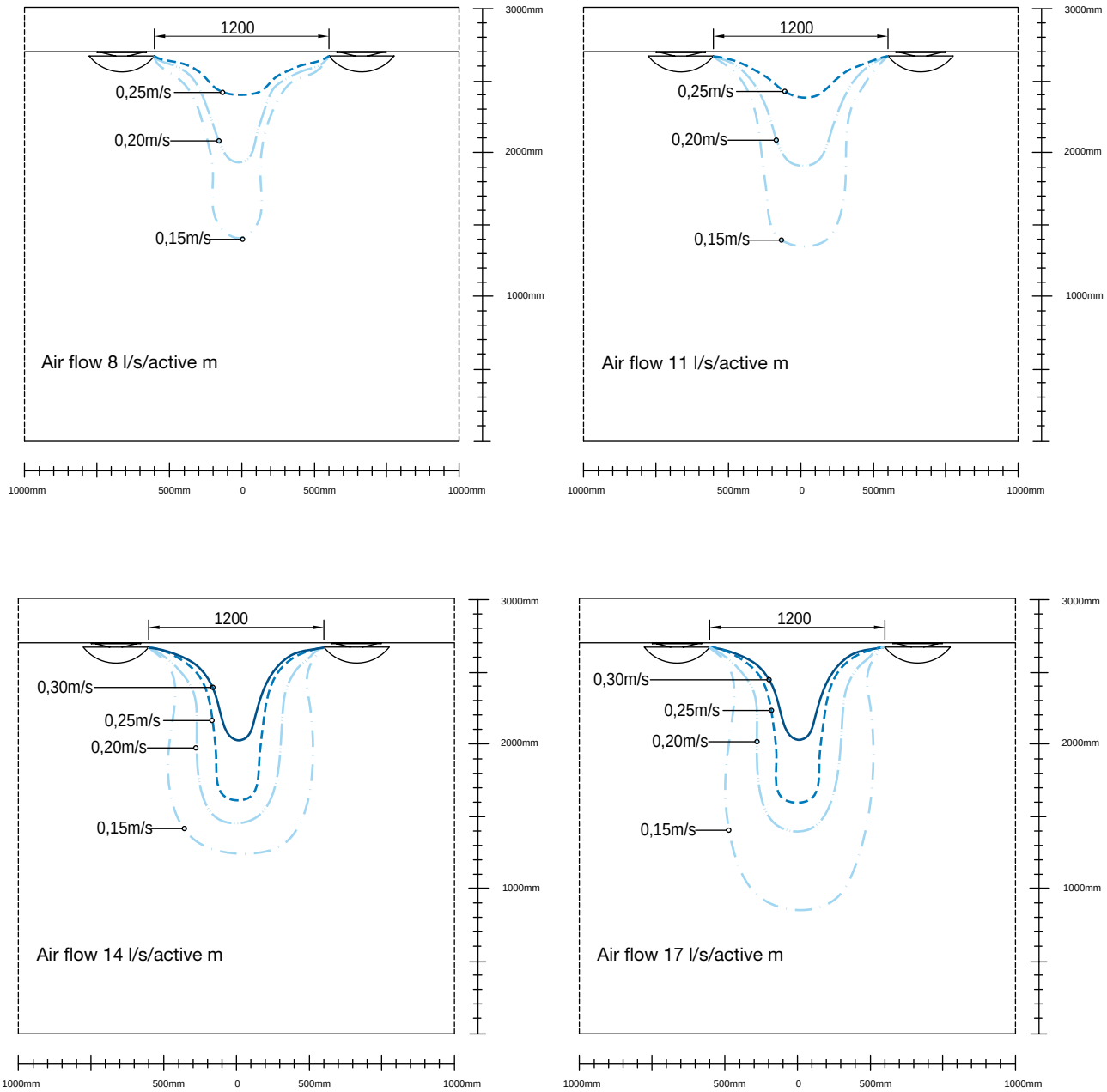

Figure 19-22. Air velocities between supply air beams at a separation of 1200 mm. Standard distribution profile (nozzles at a 30° angle). Nozzle pressure of 60 Pa.

We reserve the right to make changes

Supply air beam Architect

Distribution diagrams, Architect

The measurements are performed with cooled air supply (Δt room air – supply air) of 5° C and cooling in the water circuit (Δt – room air – average water temperature) of 8° C. All heat supplied through the walls (the V test method).

For distribution diagrams, where the nozzles have an angle of 30°, the short ends of the beams should not be closer than 1.2 m from each other, if the air velocities given below are to apply.

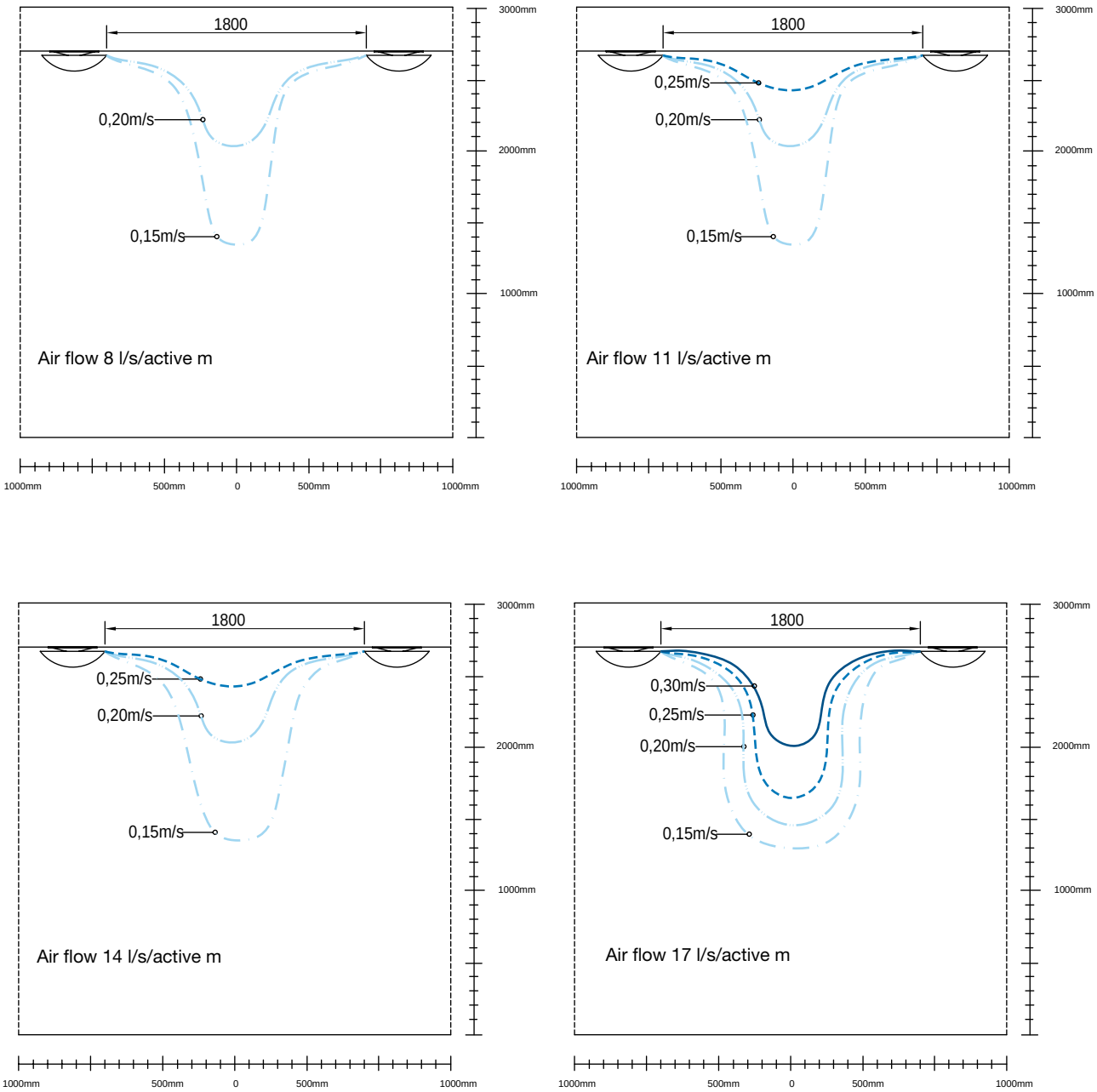

Figure 23-26. Air velocities between supply air beams at a separation of 1800 mm. Standard distribution profile (nozzles at a 30° angle). Nozzle pressure of 60 Pa.

Supply air beam Architect

1 2 3 4 5 6 7 8 9 10 11 12 13 14 15 16 17 18 19

Distribution diagrams, Architect

The measurements are performed with cooled air supply (Δt room air – supply air) of 5° C and cooling in the water circuit (Δt – room air – average water temperature) of 8.5° C. All heat supplied through the walls (the V test method).

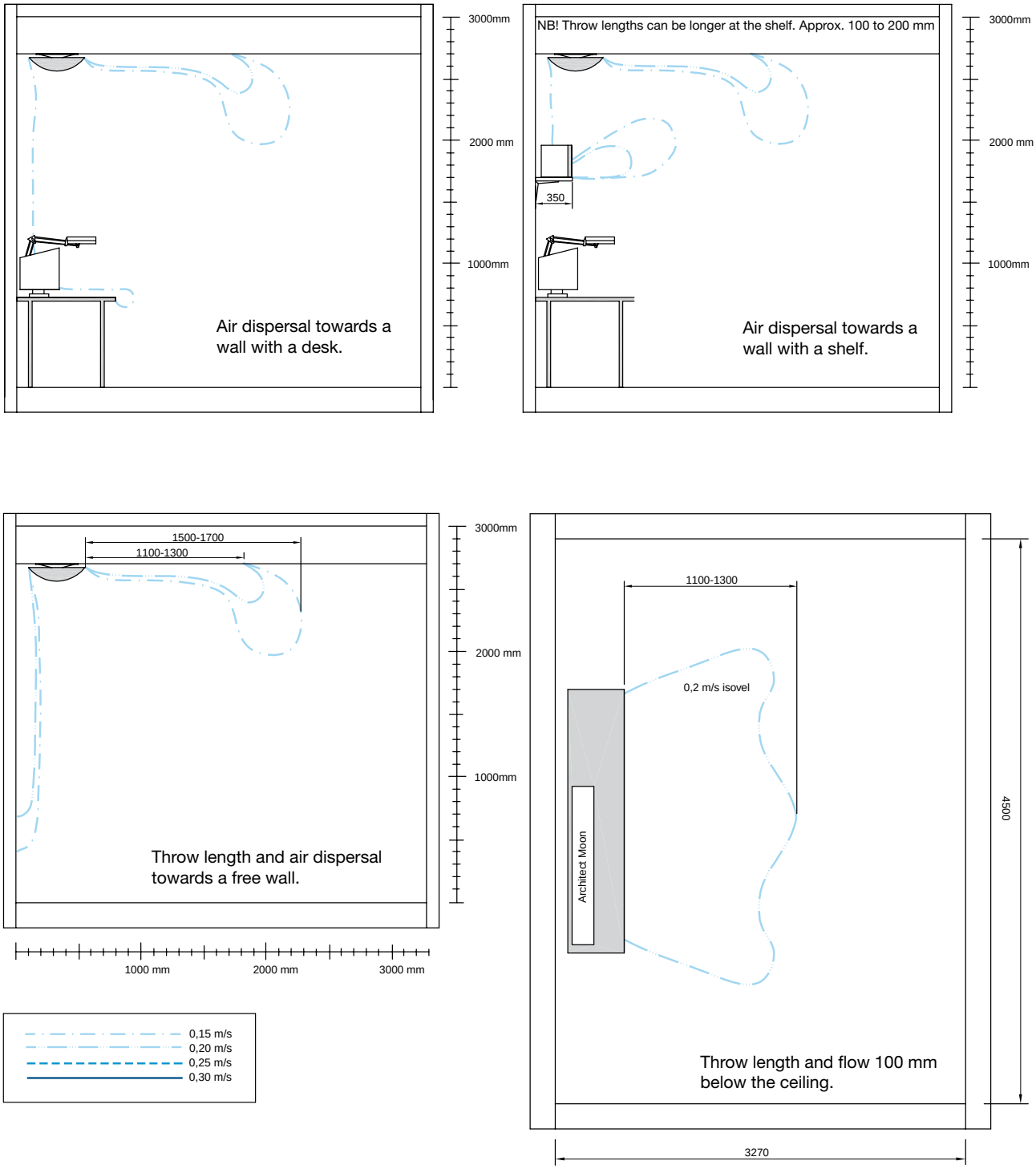

Figure 27-30. Air velocities below the supply air beam, when the airflow is 8 l/s per active metre. Standard distribution profile (nozzles at a 30° angle). Nozzle pressure of 60 Pa.

We reserve the right to make changes

Supply air beam Architect

Distribution diagrams, Architect

The measurements are performed with cooled air supply (Δt room air – supply air) of 5° C and cooling in the water circuit (Δt – room air – average water temperature) of 8° C. All heat supplied through the walls (the V test method).

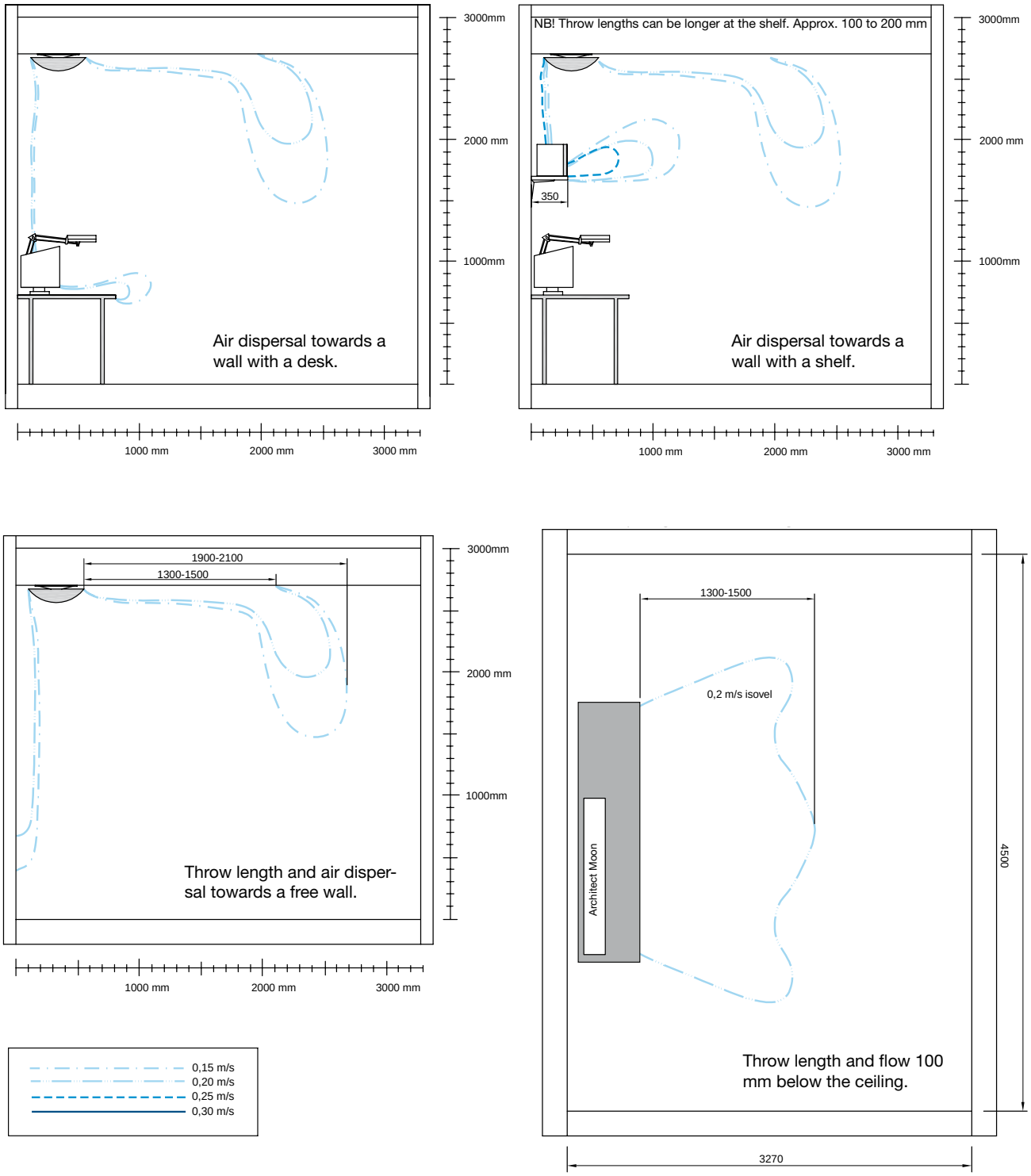

Figure 31-34. Air velocities below the supply air beam, when the airflow is 11 l/s per active metre. Standard distribution profile (nozzles at a 30° angle). Nozzle pressure of 60 Pa.

Supply air beam Architect

Distribution diagrams, Architect

The measurements are performed with cooled air supply (Δt room air – supply air) of 5° C and cooling in the water circuit (Δt – room air – average water temperature) of 8° C. All heat supplied through the walls (the V test method).

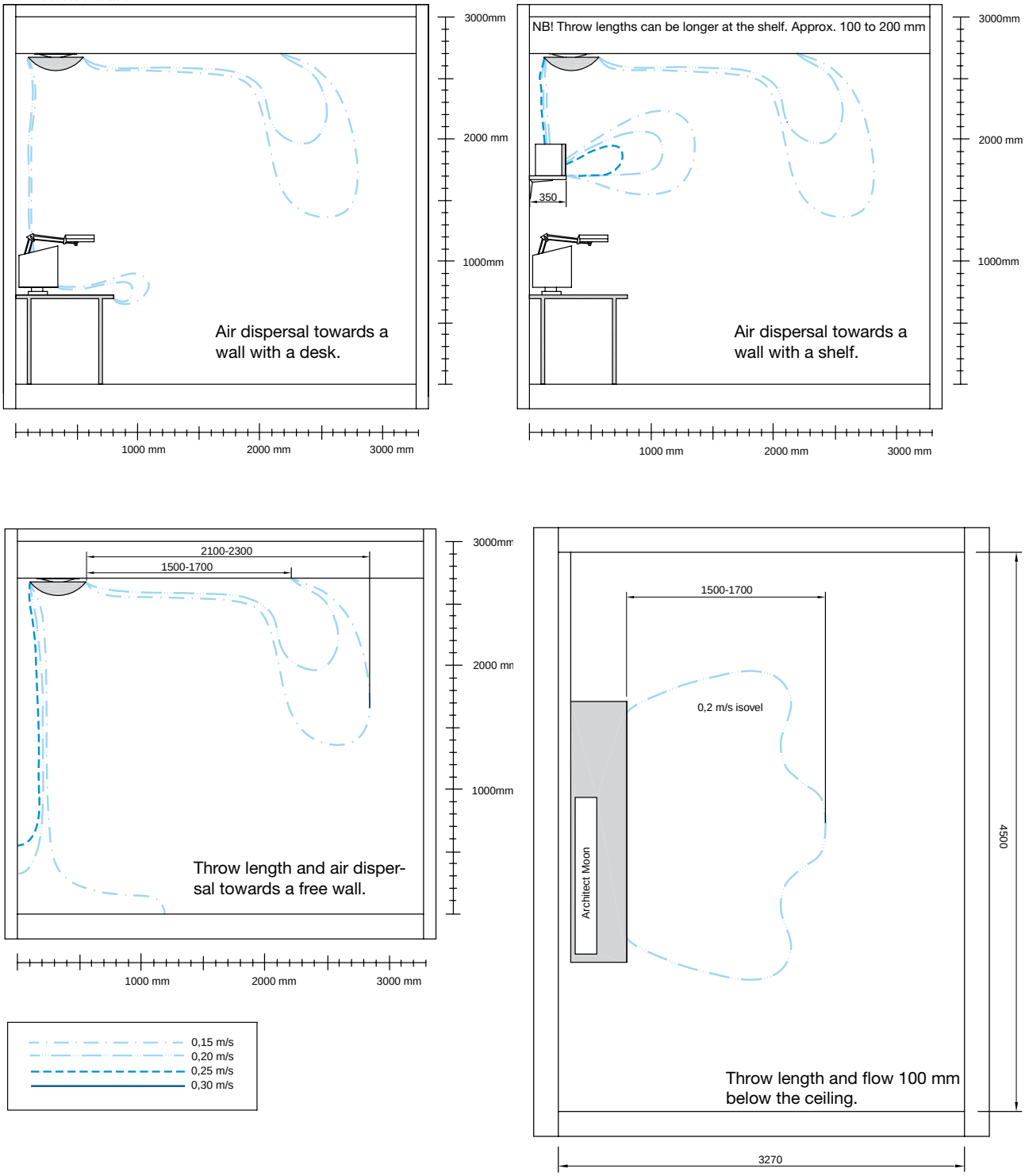

Figure 35-38. Air velocities below the supply air beam, when the airflow is 14 l/s per active metre. Standard distribution profile (nozzles at a 30° angle). Nozzle pressure of 60 Pa.

We reserve the right to make changes

Supply air beam Architect

Distribution diagrams, Architect

The measurements are performed with cooled air supply (Δt room air – supply air) of 5° C and cooling in the water circuit (Δt – room air – average water temperature) of 8.5° C. All heat supplied through the walls (the V test method).

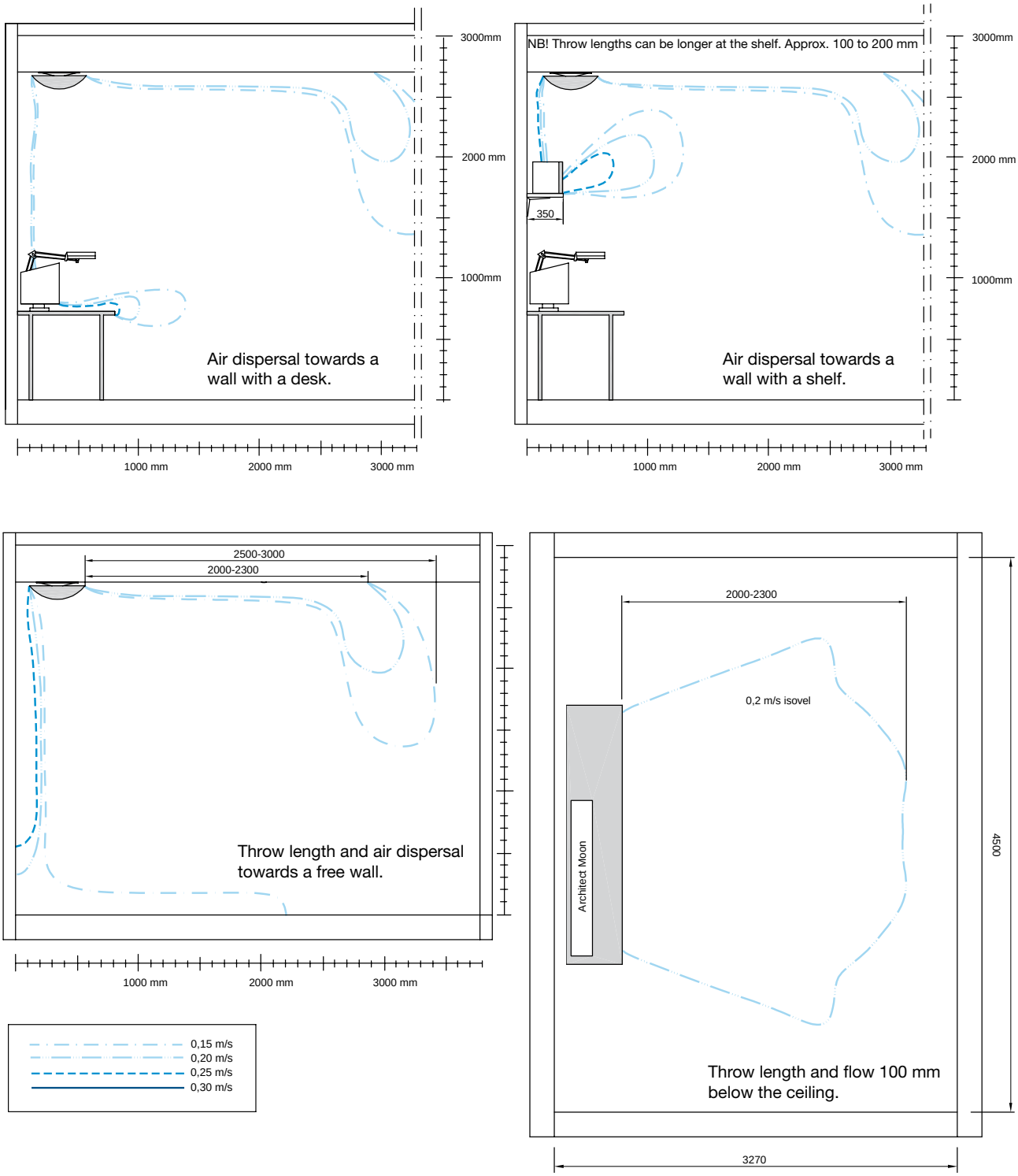

Figure 39-42. Air velocities below the supply air beam, when the airflow is 17 l/s per active metre. Standard distribution profile (nozzles at a 30° angle). Nozzle pressure of 60 Pa.

Supply air beam Architect

Pressure drop in water circuit, cooling

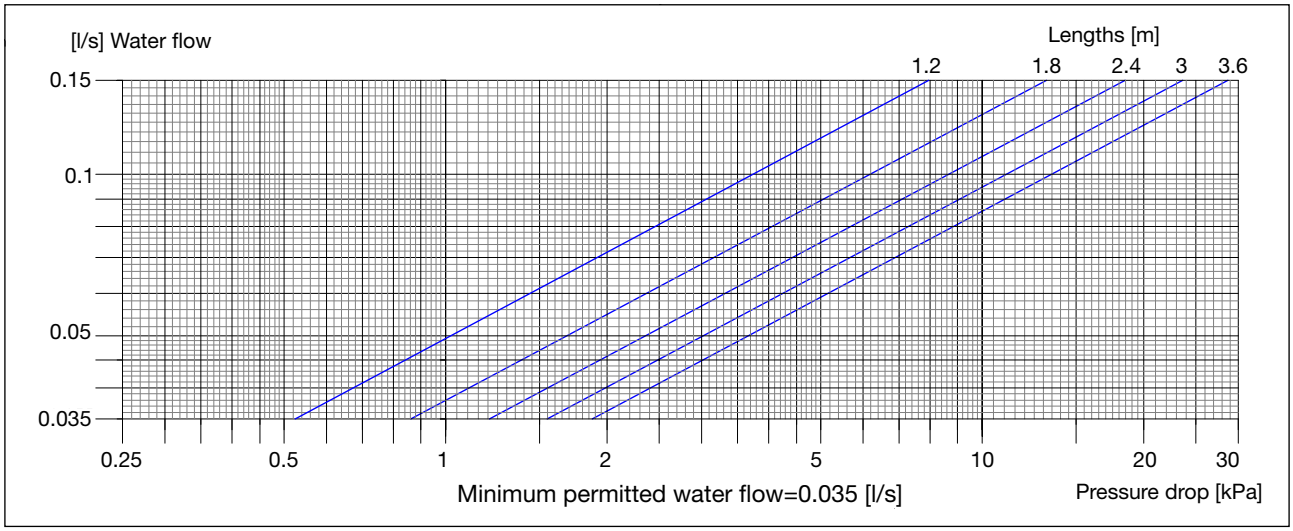

Diagram 4. Pressure drop in water circuit, cooling.

$q_w = P / (C_p \times \Delta t)$

q_w = *water flow [l/s]*
P = effect [W]
C_p = *specific heat capacity [J/(kg·K)]*
Δt = *temperature difference in the water circuit in/out [K]*

Example:

Architect 2.4 m, which provides an output of 583 W
$\Delta t = 3$ *K*
$q_w = 583 / (4200 \times 3) = 0.046$ *l/s*
The pressure drop in the water circuit is read off as 2 kPa, from diagram 4.

Pressure drop in water circuit, heating

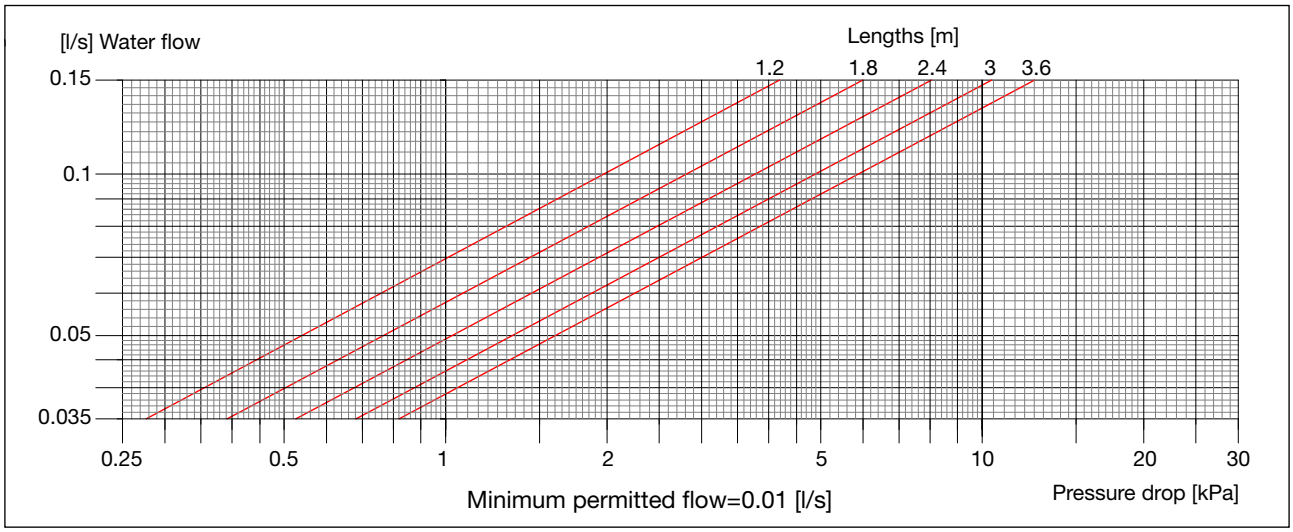

Diagram 5. Pressure drop in water circuit, heating.

$q_w = P / (C_p \times \Delta t)$

q_w = *water flow [l/s]*
P = effect [W]
C_p = *specific heat capacity [J/(kg·K)]*
Δt = *temperature difference in the water circuit in/out [K]*

Example:

Architect 2.4 m, which provides an output of 1464 W
$\Delta t = 10$ *K*
$q_w = 1464 / (4200 \times 10) = 0.035$ *l/s*
The pressure drop in the water circuit is read off as 0.53 kPa, from diagram 5.

We reserve the right to make changes

Supply air beam Architect

Control

Lindab offers control equipment that is very simple to use. To avoid the heating and cooling being activated at the same time, the system is controlled sequentially (Regula Combi). It is also possible to control only the heating or the cooling (Regula Mono). For the technical data, refer to the chapter Regula.

Colour

Architect is available as standard in white, RAL 9010, gloss value 30. Other colours may be ordered specially.

Designations

Product/Version:	Architect Moon, etc.
Connection diam. water, [mm]:	15
Connection diam. air, [mm]:	100, 125*
Coupling options:	Air: A, B Water: 1, 2, 3, 4
Length, [m]:	Length in metres
Air quantity, [l/s]:	Must always be specified
Nozzle pressure, [Pa]:	Must always be specified
Distribution profile:	Standard (30°) Medium (16°) Long (0°)
Plus features:	See page 166

* Only Moon, Facet, Oval.

Programme text

Supply air beams from Lindab	**Qty**
Product:	
Architect Moon-15-100-A1-1.8 m	40
Air quantity:	15 l/s
Nozzle pressure:	60 Pa
Distribution profile:	Medium (16°)
Plus features:	
Drypac:	
Regula Secura:	
Cooling control valve:	
Cooling actuator:	
Accessories:	
Regula Combi:	40
Product:	
Architect Box-15-100-B2-2.4 m	20
Air quantity:	20 l/s
Nozzle pressure:	60 Pa
Distribution profile:	Short (30°)
Plus features:	
Drypac:	
Heating:	
Regula Secura:	
Cooling control valve:	
Cooling actuator:	
Heating control valve:	
Heating actuator:	
Air vent:	
Accessories:	
Regula Combi:	20

Supply air beam

Polaris I & S

Contact, Overview, Index	1
Guideline heating and cooling	2
Plexus	3
Professor	4
Pilot	5
Architect	6
Polaris I & S	7
Plafond	8
Podium	9
Celo	10
Cabinett	11
Capella	12
Carat	13
Fasadium	14
Atrium H & C /Loggia	15
Regula	16
Drypac™	17
Lighting	18
TEKNOsim	19

© 10.2009 Lindab Ventilation A/S. All forms of reproduction without written permission are forbidden. Lindab® is the registered trademark of Lindab AB.
Lindab's products, systems, product and product group designations are protected by intellectual property rights (IPR).

Supply air beam

Polaris I

Use

Lindab's supply air beam Polaris I has a large cooling capacity and can therefore be used to advantage in rooms with substantial cooling requirements.

In terms of appearance, Polaris I looks similar to Professor. Polaris/Professor can therefore be used in alternation in the same room and thus provide an architectonically uniform appearance in the room.

Polaris I is equipped with divergent nozzles, which results in a draft-free indoor climate.

Polaris I can be used for cooling, heating and ventilation. Polaris I can be supplied with the following features, Drypac™ condensation protection, Regula Secura condensation guard, built-in valves and actuators, built-in exhaust air valve, etc. The product offers many possibilities and great flexibility.

Installation

Polaris I is available for integrated installation. Polaris I is installed as an integral part of a suspended ceiling, where the beam is mounted on a standard T-support.

Polaris I can be supplied with horizontal and vertical connections.

Worth noting

Polaris I is equipped with two large cooling batteries that provide a large cooling capacity. In a room with substantial cooling requirements, 60 - (80W/m^2), Polaris I can be used to provide the necessary cooling effect. Lindab's supply air beams are Eurovent-certified and tested according to EN-15116 and EN-14518.

Key figures

Length:	1.2 – 3.6 m
Width:	592 mm (60)
Height:	230 mm
Capacity:	Cooling effect of up to 2450 W
	Air quantity of up to 40 l/s
	(2 x 100 mm connection)

1 2 3 4 5 6 7 8 9 10 11 12 13 14 15 16 17 18 19

Supply air beam Polaris I

1 2 3 4 5 6 7 8 9 10 11 12 13 14 15 16 17 18 19

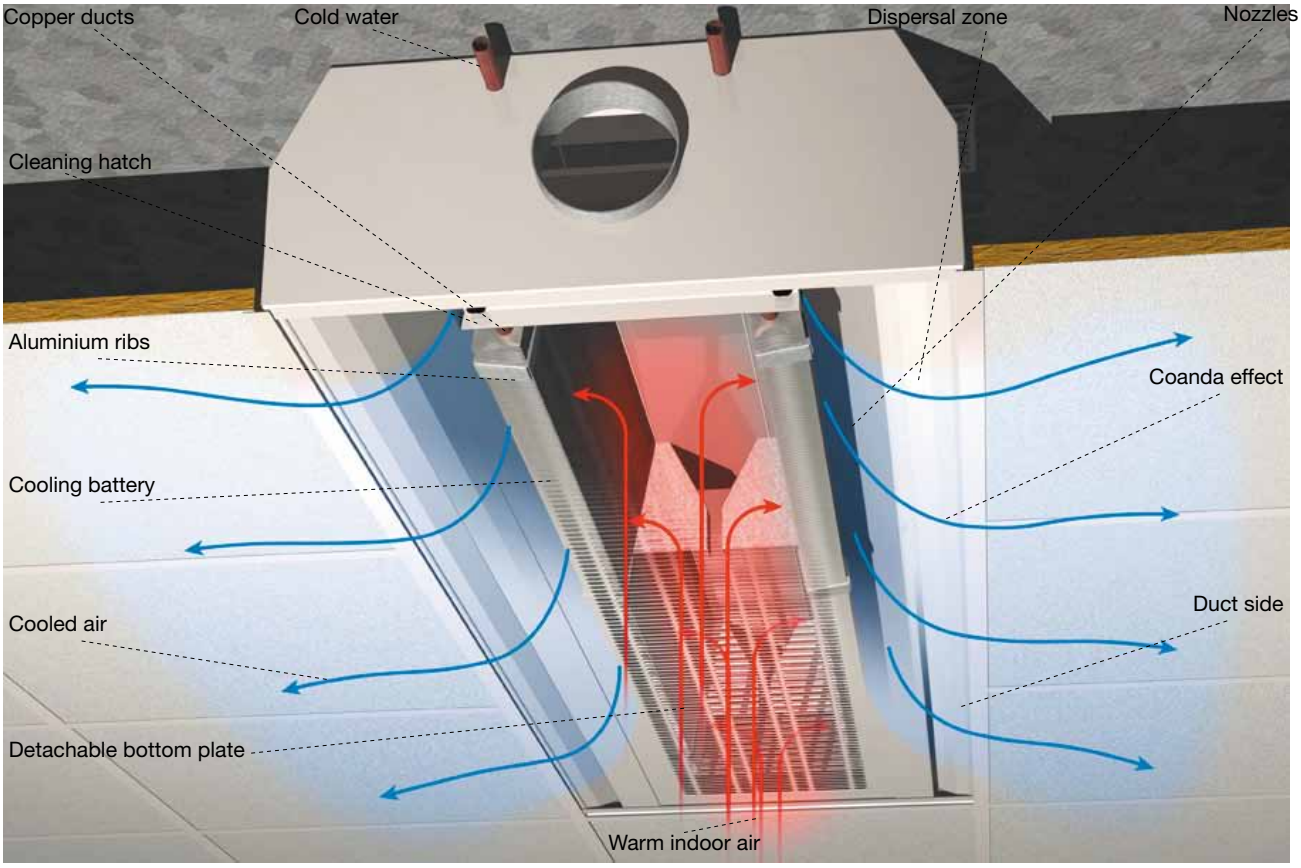

Picture 1. Polaris I is based on the induction principle.

Function

Powerful function on minimum space

Lindab's supply air beam, Polaris I, is based on the induction principle. Ventilation air with a certain dynamic pressure is released through specially formed nozzles into a dispersal zone, thereby creating a low static pressure. This low pressure causes warm air from the room to be sucked into the ventilation air passing through the battery (see picture 1). The volume of warm indoor air is 4 to 5 times that of the ventilation air. The air is cooled as it passes through the battery, which consists of aluminium ribs with copper pipes filled with cold running water. The heat of the room is absorbed through the aluminium ribs and then transferred through the copper pipe to the water circuit and then on to a central cooling unit. Despite the product's small external dimensions, the construction makes it possible to achieve a high cooling effect.

The nozzles releasing the ventilation air are designed to maintain the Coanda effect, i.e. the adhesive capacity of the air in the duct, in the nozzles. The air then follows the side of the duct towards the ceiling. The side of the beam is shaped so as to transfer the Coanda effect on to the ceiling of the room.

If both heating and cooling are required, there is an extra pipe in the battery, which heats the room.

We reserve the right to make changes

Supply air beam

Polaris I

Picture 2. Polaris I ø 125 mm single air connection

Picture 3. Polaris I 2 x 100 mm double air connection

Construction

Maximum accessibility

For best possible accessibility for cleaning, suspension, adjustment or maintenance, the whole underneath of the Polaris I can be removed. Where the beam is equipped with built-in valves and control devices, these are also accessible for adjustment and maintenance from below. The product can be supplied in a version where the volume of air can be varied on both sides. This is achieved by different plugging of the Coanda nozzles. If required, it is also possible to plug one part of the beam completely. We have succeeded in making the product so compact, by using double vertical batteries and double air ducts (see Picture 3). If other pressures and flow patterns are required, Lindab's Coanda nozzles are easily accessible from below for plugging.

The water pipes are made of copper. Nevertheless, the water should be oxygen-free to prevent corrosion.

Hygiene

Everything is accessible from below

The requirement for all parts of the beam to be easy to clean is met by the removable underside. Polaris I with a single air connection is also supplied with a removable hatch, on the distribution duct, for cleaning and making adjustments (see Picture 4). By loosening the hatch, you can clean both the inlet duct system and the beam's side ducts from the inside. Polaris I with double air connection has a removable cleaning hatch on the end-piece of the product. The vertical batteries are accessible from three sides and thus can be cleaned thoroughly. The same applies to the Coanda nozzles, which can be easily cleaned from below.

All of this allows the product to be cleaned thoroughly. With the Polaris I, with single air connection, this is possible without access to the short sides of the product, which may thus be positioned directly against a wall.

Picture 4. Cleaning and making adjustments.

1 2 3 4 5 6 7 8 9 10 11 12 13 14 15 16 17 18 19

Supply air beam

Polaris I

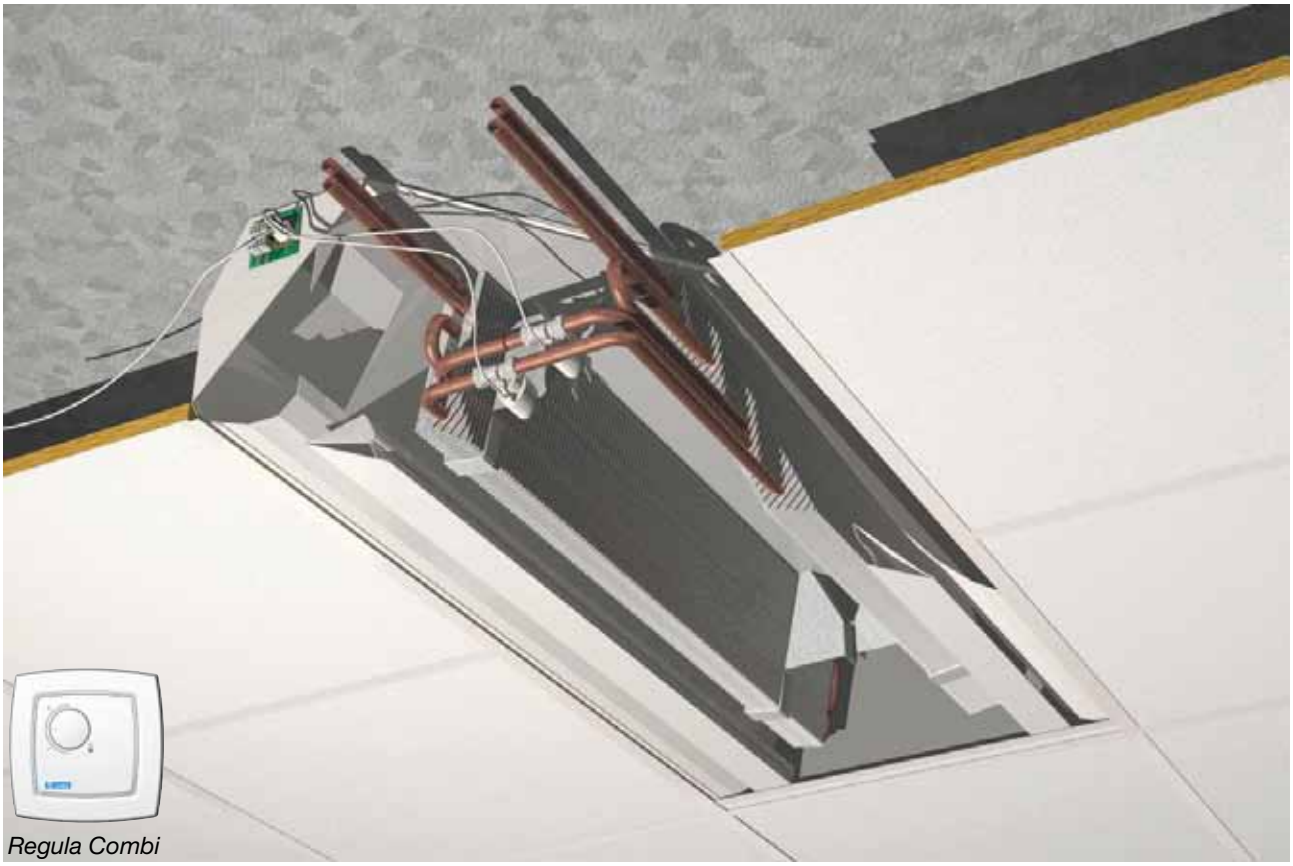

Picture 5. Polaris I with built-in valves and Regula Connect with fast coupling. (Regula Combi fitted into the bottom plate).

Climate units

Cooling, heating, ventilation and control

The large capacity of the product allows it to meet the room's need for cooling, ventilation and heating, while occupying a very small area of the ceiling. In a normal-size office, a unit 1.2 m long is often sufficient! Since the product is supplied with a factory-preset airflow, at a certain air pressure, installation is quick and easy. By removing the nozzle plugs or plugging more nozzles, respectively, the airflow, if necessary, can be increased or decreased at a later time. The increase, however, is limited by the number of nozzles.

Polaris I can also be supplied with built-in valves and actuators for cooling and heating.

If required, the actuator's cables can be connected to a connection card on the end-piece of the product, with an error-proof fast coupling adapted to the cable for the Regula control centre. The connection card has contacts for relaying control signals and/or the power supply between individual climate units. Up to 12 climate units can be controlled by each control centre.

We reserve the right to make changes

Supply air beam

Polaris I

Room environment

The Polaris' ventilation principle is that the cooled or heated air is spread across the ceiling until it reaches the walls where it is driven down into the room (see Picture 6). The heated air is then absorbed from the room and fed to the beam for further cooling or heating. In this way, the room is kept well ventilated. In some cases, conventional supply air beams, which spread the air linearly, can create high air velocities, as the air stream becomes compressed and concentrated towards the centre. To reduce air velocities, the air distribution in Polaris I is angled outwards. The outer nozzles point slightly outwards, which leads to air velocities lower significantly than with conventional supply air beams with a linear outlet.

By using double air ducts, we have made use of all the volume in the beam. The beam can therefore cope with large volumes of air while keeping its noise low, despite its small external dimensions.

Regarding the noise, the nozzles are shaped like an inverted trumpet, i.e. somewhat negatively directed at the outlet, which also leads to very low noise from the nozzle. The structure of the product, with a distribution channel towards the double side ducts, means that the product's sound attenuation is good and that cross-noise in the ventilation system and between rooms is low.

Design

The underside can have different appearances, either transverse slots or round or square perforations.

Picture 6. Polaris I 60 in an office environment.

1 2 3 4 5 6 7 8 9 10 11 12 13 14 15 16 17 18 19

Supply air beam Polaris I

1
2
3
4
5
6
7
8
9
10
11
12
13
14
15
16
17
18
19

Data

Variants

Size: Polaris I is 592 mm wide (width 60) and 240 mm high (incl. fixings).

Lengths: Polaris I is available in lengths from 1.2 m to 3.6 m in steps of 0.1 m.

Water connection: The cooling water connection is available in o.d. 15 mm or 22 mm. Both horizontal and vertical connection are available as part of the standard package. The connection for the heating pipes is o.d. 15 mm.

Air connection: The single air connection has a dimension of Ø 125 mm. Both horizontal and vertical connections are available as standard. Polaris I with double air connection uses two Ø 100 mm, horizontal connectors.

Design: Polaris I is available with different types of bottom plates. The bottom plate is perforated with Slot 4 x 20 mm as standard, but other surfaces are also available.

Nozzle angle: The nozzles can be ordered with different angles, 0°, 16° or 30°. The standard is 30°.

Anti-crosstalk hood: It is included in the standard package, to prevent noise spreading to adjoining rooms, but also if there is a requirement for the room air not to come into contact with the space above the suspended ceiling.

Surface treatment: Polaris I is manufactured as standard from enamelled sheet metal, colour white, RAL 9010.

Airflow control: The product has a preset pressure drop value, so on-site adjustment is not necessary. A prerequisite is that the duct system in the building has a relatively low-pressure drop compared to that of the product. Where a damper is required, you can order a balancing damper.

Plus features

Factory preinstalled.

Heating: Polaris I can be supplied with a heating feature. An additional coil in the battery heats the room.

Drypac™: Anti-condensation treated cooling batteries that enable water temperatures below the dew point without dripping. Refer to the chapter Drypac™.

Integrated valve and actuator: A control valve, with variable Kv value, and an actuator can be preinstalled in the product.

Air vent: Air vents are not supplied as part of the standard package but it is possible to order them to be preinstalled.

Integrated control centre: It is possible to have Lindab's room control centre Regula installed in the product. The control knob is fully accessible through the bottom plate. Refer to the chapter Regula.

Regula Secura condensation protection: There is the option to have Lindab's Regula Secura condensation guard installed in the product.

Connect: The product can be equipped with the Regula Connect connection card (refer to the chapter Regula).

Adaptation to suspended ceiling: The product can be adapted to most types of suspended ceilings offered on the market.

Exhaust valve: The product can be provided with an exhaust valve.

Accessories

Delivered separately.

Control: Refer to the chapter Regula.

We reserve the right to make changes

Supply air beam

Polaris I

Dimensioning

Cooling effect supplied by the ventilation air [W]

1. Start by calculating the necessary cooling effect that has to be supplied to the room to achieve a given temperature.
   Lindab's climate simulation program TEKNOsim is a great help here.
2. Calculate any cooling effect provided by the ventilation air.
3. The remaining cooling effect has to be supplied by the Polaris I.

Formula for the air cooling effect: $P = \dot{m} \times C_p \times \Delta t$

Where:
$\dot{m}$ = mass flow [kg/s]
C_p = specific heat capacity [J/(kg·K)]
q_p = air flow [l/s]
Δt = the difference between the room temperature and the temperature of the supply air [K].
It is usually $\dot{m} \times C_p \approx q_p \times 1{,}2$

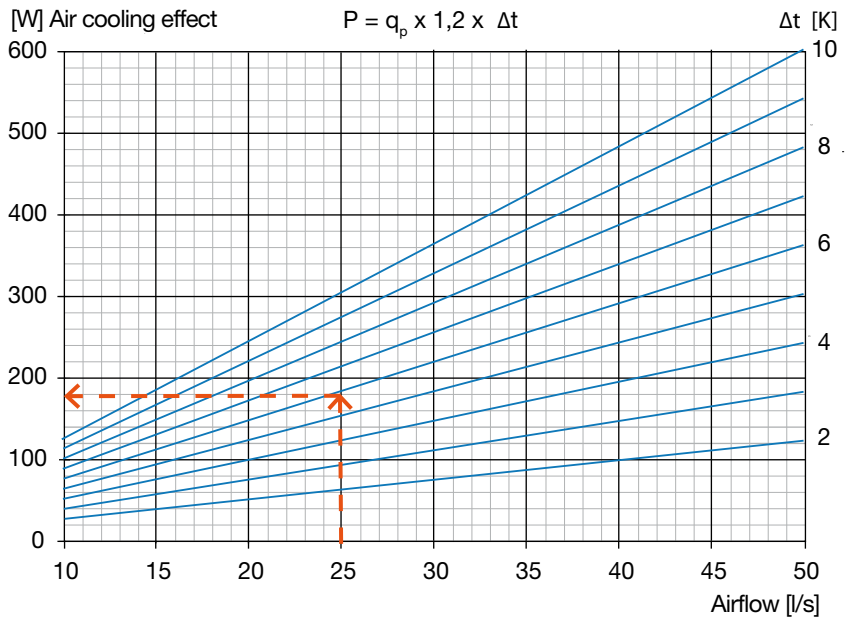

Diagram 1. Air cooling effect as a function of airflow. For example, if the air flow is 25 l/s and the under-temperature of the supply air is Δt = 6 K, the cooling effect from the graph is 180 W.

Supply air beam Polaris I

1 2 3 4 5 6 7 8 9 10 11 12 13 14 15 16 17 18 19

Dimensioning

Effect diagram

Follow the instructions below, to read off the effect from the diagram.

1. Calculate Δt (room – mean water)
2. Product length minus 0.3 m, to obtain the active length.
3. Divide the airflow by the active length. Enter the result on the horizontal axis in diagram 2.
4. Follow the flow line to the right pressure, and then read off the effect per active metre and Kelvin.
5. Multiply the effect, which was read off, by Δt.
6. Then, multiply by the active length.

Cooling
What is the cooling effect of a 1.8 m Polaris I with 25 l/s and pressure of 60 Pa?
The room's summer temperature is assumed to be 24.5° C
The cooling water temperature in/out of Polaris I is 14/17° C

Answer
Temperature difference Δt = room – mean water
Δt = 24.5 - (14+17) / 2 = 9 K
Active length = 1.8 m - 0.3 m = 1.5 m
25 l/s / 1.5 m = 16.7 l/(s·m)
Read off from diagram 2: 52 W/(m·K).
Cooling effect (P) = 52 × 9 K × 1.5 m = 702 W

NB! The effect diagram applies for a nominal flow of 0.038 l/s. To obtain the right effect at other flows, read off the effect factor from diagram 3 and multiply the effect, which was read off, by this factor (see example 1).

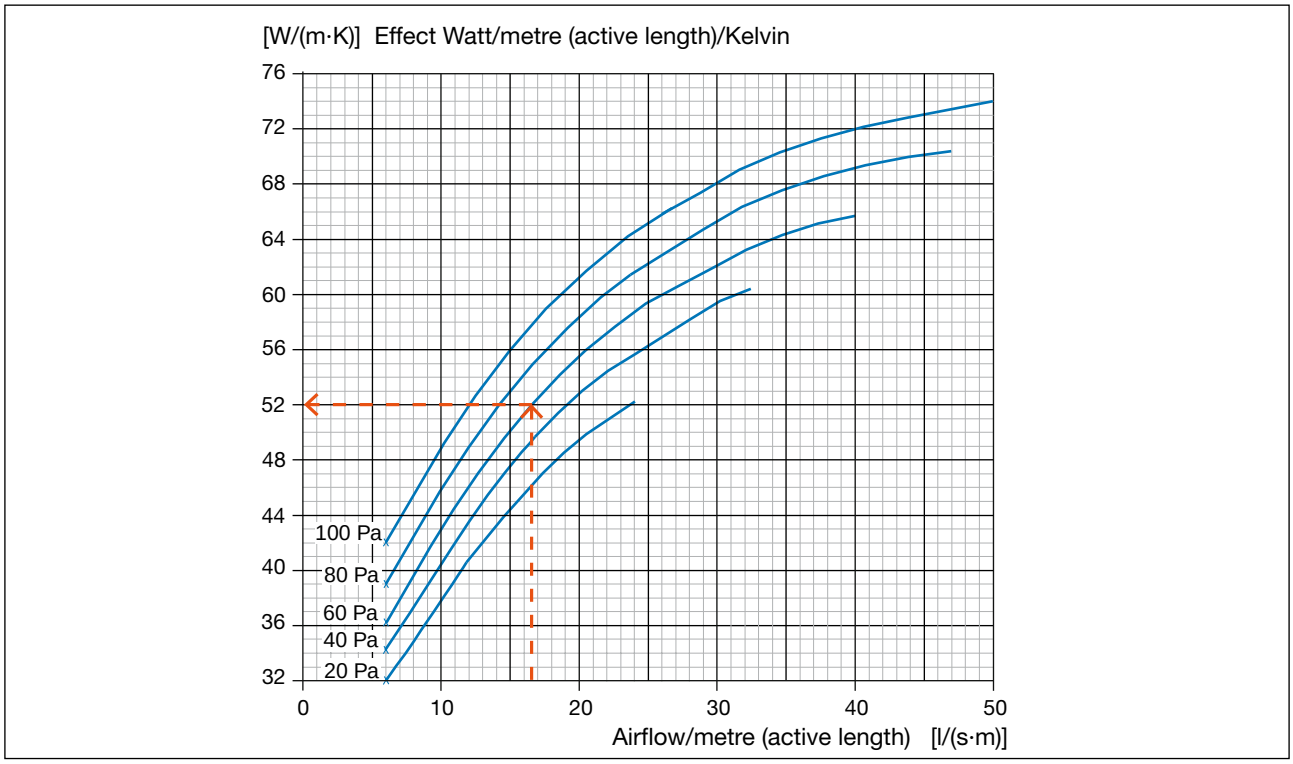

Diagram 2. Effect per active metre and Kelvin as a function of airflow per active metre with nozzle pressures of 20, 40, 60, 80 and 100 Pa.

Dimensioning

Pressure drop in air connection (Pa)

Table 1 below shows the pressure drop in the connection. After calculating the necessary pressure for the supply air beam, add it to the selected static pressure in the nozzles.

Example

Polaris I-60-22-125-A4-3.0 with 20 l/s and static nozzle pressure of 60 Pa. This provides a necessary total pressure in the duct of 60 Pa + 2 Pa = 62 Pa.

Polaris I						
Airflow (l/s)	20	30	40	50	60	70
Ø125	2	5	9	15		
2 x Ø100					17	22

Table 1. Air pressure drop in the connection to Polaris I.

We reserve the right to make changes

Supply air beam Polaris I

Dimensioning

Flow-adjusted effect factor

Example 1

Cooling
Read off the effect from the effect diagram and calculate your flow with the following formula: $q_w = P / (C_p \times \Delta t)$

Where:
q_w = water flow [l/s]
P = effect [W]
C_p= specific heat capacity [J/(kg·K)]
Δt = temperature difference in the water circuit in/out [K]

For example q_w = 702 / (4200 x 3) = 0.056 l/s
The effect factor will then be 1.05 (see diagram 3) and the new effect P = 702 x 1.05 = 737 W.

NB! To obtain an exact value, repeat the calculation and calculate a new flow for the obtained effect. Read off a new adjustment factor, multiply it by the original effect from the effect diagram and obtain a new effect (see example 2).

Example 2

Heating
What is the heating effect of a 1.8 m Polaris I with 25 l/s and pressure of 60 Pa?
The room's winter temperature is assumed to be 21° C
The hot water temperature in/out of Polaris I is 56/46° C

Answer
Temperature difference Δt = room – mean water
Δt = 21 - (56+46) / 2 = 30 K
Active length = 1.8 m - 0.3 m = 1.5 m
25 l/s / 1.5 m = 16.7 l/(s·m)
Read off from diagram 2. 52 W/(m·K).

Heating effect (P) = 52 × 30 K × 1.5 m = 2340 W

Use the calculated heating effect to calculate the water flow $q_w = P / (C_p \times \Delta t)$

Δt = temperature difference in the water circuit in/out [K]
q_w = 2340 /(4200 x 10) = 0.056 l/s

The effect factor will then be 0.84 (see diagram 3) and the new effect P = 2340 x 0.84 = 1966 W

With the new heating effect, a new water flow is calculated.
q_w = 1966 / (4200 x10) = 0.047 l/s

Read off the effect factor (the value is 0.83) to calculate the effect.
P = 2340 x 0.83 = 1942 W

The heating effect is calculated to be 1942 W.

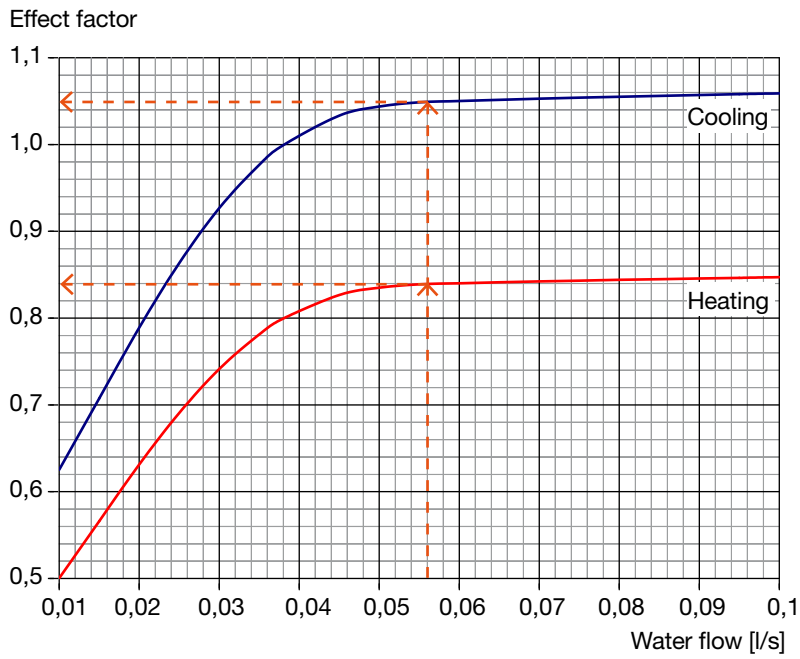

Diagram 3. Effect factor as a function of water flow.

Supply air beam Polaris I

1 2 3 4 5 6 7 8 9 10 11 12 13 14 15 16 17 18 19

Cooling effect, Polaris I

Drypac™, condensation protection

All Polaris I models can be ordered with Drypac™ plus, a condensation protection consisting of perlite (volcanic stone) that is applied to the fin surfaces. Drypac™ has properties that enable it to work with a supply temperature that is 4° C below the dew point, for continuous operation, and 5 to 8° C below the dew point for limited periods. Drypac™ provides both an increased effect output and increased security against condensation drips. At a working temperature above the dew point, the output is reduced by 17% but when the working temperature is below the dew point, there is no reduction in output. This means that the effect is highest when the need is greatest.

For more information about Drypac™, refer to the chapter Drypac™.

Effect data

All table values are presented with flow-adjusted effects based on the Δt for Water out-in given in the table.

Lindab's supply air beams are Eurovent-certified and tested according to EN-15116, EN-14518.

Noise

The table below presents both the sound pressure level with 10 m² Sabine equivalent sound absorption area dB(A) and the sound output level.

Nozzle pressure 60 Pa			Water															Air		
Q(m³/h)	Q(l/s)	Polaris I	Δt room - average water 7° C			Δt room - average water 8° C			Δt room - average water 9° C			Δt room - average water 10° C			Δt room - average water 11° C			Total pressure, duct	Noise pressure	Noise power
		L(m)	P(W)	q(l/s)	p(kPa)	P(W)	q(l/s)	p(kPa)	P(W)	q(l/s)	p(kPa)	P(W)	q(l/s)	p(kPa)	P(W)	q(l/s)	p(kPa)	Pa	dB(A)	dB(A)
72	20	1,2	312	0,025	0,7	387	0,031	1,0	460	0,037	1,3	528	0,042	1,6	590	0,047	2,0	62	23	27
		1,8	511	0,041	2,5	599	0,048	3,3	679	0,054	4,2	756	0,060	5,0	832	0,066	6,0			
		2,4	653	0,052	5,4	748	0,060	6,9	843	0,067	8,6	939	0,075	10,4	1034	0,082	12,4			
		3,0	772	0,061	9,4	884	0,070	12,0	996	0,079	14,9	1076	0,086	2,5	1201	0,096	3,0			
		3,6	796	0,063	1,8	963	0,077	2,5	1116	0,089	3,3	1255	0,100	4,0	1387	0,110	4,8			
108	30	1,2	372	0,030	0,9	454	0,036	1,2	530	0,042	1,6	598	0,048	2,0	663	0,053	2,4	65	25	29
		1,8	606	0,048	3,4	698	0,056	4,4	786	0,063	5,4	875	0,070	6,6	964	0,077	7,8			
		2,4	760	0,060	7,1	870	0,069	9,1	981	0,078	11,3	1091	0,087	13,7	1180	0,094	2,3			
		3,0	893	0,071	12,2	973	0,077	2,1	1125	0,090	2,7	1268	0,101	3,3	1397	0,111	3,9			
		3,6	966	0,077	2,5	1139	0,091	3,4	1298	0,103	4,2	1444	0,115	5,1	1591	0,127	6,1			
144	40	1,2	402	0,032	1,0	486	0,039	1,4	562	0,045	1,8	634	0,050	2,2	698	0,056	2,6	69	28	32
		1,8	667	0,053	4,0	763	0,061	5,1	861	0,069	6,4	958	0,076	7,7	1055	0,084	9,2			
		2,4	843	0,067	8,6	966	0,077	11,0	1089	0,087	13,7	1190	0,095	2,3	1320	0,105	2,8			
		3,0	937	0,075	2,0	1110	0,088	2,6	1269	0,101	3,3	1412	0,112	4,0	1556	0,124	4,8			
		3,6	1101	0,088	3,2	1280	0,102	4,1	1443	0,115	5,1	1606	0,128	6,2	1770	0,141	7,4			
180	50	1,8	704	0,056	4,4	807	0,064	5,7	909	0,072	7,0	1012	0,081	8,5	1115	0,089	10,2	75	32	36
		2,4	908	0,072	9,8	1040	0,083	12,5	1147	0,091	2,2	1289	0,103	2,7	1421	0,113	3,2			
		3,0	1040	0,083	2,4	1215	0,097	3,1	1376	0,110	3,8	1532	0,122	4,6	1687	0,134	5,5			
		3,6	1209	0,096	3,7	1392	0,111	4,8	1569	0,125	5,9	1746	0,139	7,2	1924	0,153	8,6			

**Vita, vattenanslutning Ø 15 ***Gröna, vattenanslutining Ø 22

Table 2. Flow-adjusted effect table. Cooling circuit Δt = 3° C (Water in-out), nozzle pressure of 60 Pa, Ø 125 air connection.
For the red values, the flow is below the recommended minimum flow of 0.035 l/s at Δt = 3° C. Increase the flow to the recommended minimum flow.

Nozzle pressure 60 Pa			Water															Air		
Q(m³/h)	Q(l/s)	Polaris I	Δt room - average water 7° C			Δt room - average water 8° C			Δt room - average water 9° C			Δt room - average water 10° C			Δt room - average water 11° C			Total pressure, duct	Noise pressure	Noise power
		L(m)	P(W)	q(l/s)	p(kPa)	P(W)	q(l/s)	p(kPa)	P(W)	q(l/s)	p(kPa)	P(W)	q(l/s)	p(kPa)	P(W)	q(l/s)	p(kPa)	Pa	dB(A)	dB(A)
216	60	1,8	729	0,058	4,7	835	0,066	6,0	941	0,075	7,5	1047	0,083	9,1	1154	0,092	10,9	77	29	33
		2,4	956	0,076	10,8	1095	0,087	13,8	1214	0,097	2,4	1358	0,108	2,9	1496	0,119	3,5			
		3,0	1119	0,089	2,7	1298	0,103	3,5	1464	0,117	4,3	1629	0,130	5,2	1795	0,143	6,2			
		3,6	1298	0,103	4,2	1487	0,118	5,4	1676	0,133	6,7	1866	0,149	8,1	2056	0,164	9,7			
252	70	1,8	747	0,059	4,9	855	0,068	6,3	964	0,077	7,8	1073	0,085	9,5	1182	0,094	11,4	82	32	36
		2,4	991	0,079	11,5	1135	0,090	14,8	1265	0,101	2,6	1408	0,112	3,1	1552	0,124	3,7			
		3,0	1180	0,094	2,9	1361	0,108	3,8	1534	0,122	4,7	1707	0,136	5,6	1881	0,150	6,7			
		3,6	1369	0,109	4,6	1568	0,125	5,9	1768	0,141	7,3	1967	0,157	8,9	2168	0,173	10,6			

**Vita, vattenanslutning Ø 15 ***Gröna, vattenanslutining Ø 22

Table 3. Flow-adjusted effect table. Cooling circuit Δt = 3° C (Water in-out), nozzle pressure of 60 Pa, 2 x Ø 100 air connection.

We reserve the right to make changes

Supply air beam Polaris I

Cooling effect, Polaris I

Nozzle pressure 80 Pa			Water															Air		
Q(m³/h)	Q(l/s)	Polaris I	Δt room - average water 7° C			Δt room - average water 8° C			Δt room - average water 9° C			Δt room - average water 10° C			Δt room - average water 11° C			Total pres-sure, duct	Noise pres-sure	Noise power
		L(m)	P(W)	q(l/s)	p(kPa)	P(W)	q(l/s)	p(kPa)	P(W)	q(l/s)	p(kPa)	P(W)	q(l/s)	p(kPa)	P(W)	q(l/s)	p(kPa)	Pa	dB(A)	dB(A)
72	20	1,2	337	0,027	0,8	415	0,033	1,1	489	0,039	1,4	558	0,044	1,8	620	0,049	2,1	82	24	28
		1,8	545	0,043	2,8	635	0,051	3,7	716	0,057	4,6	797	0,063	5,5	878	0,070	6,6			
		2,4	692	0,043	6,0	793	0,063	7,7	894	0,071	9,5	995	0,079	11,6	1096	0,087	13,8			
		3,0	821	0,065	10,5	941	0,075	13,4	1019	0,081	2,3	1156	0,092	2,8	1285	0,102	3,4			
		3,6	875	0,070	2,2	1047	0,083	2,9	1200	0,096	3,7	1344	0,107	4,5	1481	0,118	5,3			
108	30	1,2	398	0,032	1,0	481	0,038	1,4	558	0,044	1,8	627	0,050	2,2	693	0,055	2,6	85	26	30
		1,8	639	0,051	3,7	732	0,058	4,8	825	0,066	5,9	918	0,073	7,2	1012	0,081	8,5			
		2,4	800	0,064	7,8	916	0,073	10,0	1033	0,082	12,4	1123	0,089	2,1	1248	0,099	2,5			
		3,0	944	0,075	13,5	1043	0,083	2,4	1197	0,095	3,0	1341	0,107	3,7	1477	0,118	4,4			
		3,6	1040	0,083	2,9	1215	0,097	3,8	1376	0,110	4,7	1532	0,122	5,7	1688	0,134	6,8			
144	40	1,2	427	0,034	1,1	513	0,041	1,5	589	0,047	2,0	661	0,053	2,4	728	0,058	2,8	89	29	33
		1,8	697	0,056	4,4	799	0,064	5,6	900	0,072	6,9	1002	0,080	8,4	1104	0,088	10,0			
		2,4	885	0,070	9,4	1014	0,081	12,0	1143	0,091	14,9	1254	0,100	2,5	1386	0,110	3,0			
		3,0	1002	0,080	2,2	1176	0,094	2,9	1336	0,106	3,6	1487	0,118	4,4	1638	0,130	5,2			
		3,6	1171	0,093	3,5	1352	0,108	4,5	1524	0,121	5,6	1696	0,135	6,8	1869	0,149	8,1			
180	50	1,2	451	0,036	1,2	537	0,043	1,7	614	0,049	2,1	687	0,055	2,6	757	0,060	3,0	75	33	37
		1,8	736	0,059	4,8	843	0,067	6,1	950	0,076	7,6	1057	0,084	9,2	1165	0,093	11,0			
		2,4	951	0,076	10,7	1089	0,087	13,7	1207	0,096	2,4	1351	0,108	2,9	1488	0,118	3,4			
		3,0	1102	0,088	2,6	1282	0,102	3,4	1445	0,115	4,2	1608	0,128	5,1	1772	0,141	6,0			
		3,6	1279	0,102	4,1	1465	0,117	5,2	1651	0,132	6,5	1838	0,146	7,9	2025	0,161	9,4			

**Vita, vattenanslutning Ø 15 ***Gröna, vattenanslutining Ø 22

Table 4. Flow-adjusted effect table. Cooling circuit Δt = 3° C (Water in-out), nozzle pressure of 80 Pa, Ø 125 air connection.
For the red values, the flow is below the recommended minimum flow of 0.035 l/s at Δt = 3° C. Increase the flow to the recommended minimum flow.

Nozzle pressure 80 Pa			Water															Air		
Q(m³/h)	Q(l/s)	Polaris I	Δt room - average water 7° C			Δt room - average water 8° C			Δt room - average water 9° C			Δt room - average water 10° C			Δt room - average water 11° C			Total pres-sure, duct	Noise pres-sure	Noise power
		L(m)	P(W)	q(l/s)	p(kPa)	P(W)	q(l/s)	p(kPa)	P(W)	q(l/s)	p(kPa)	P(W)	q(l/s)	p(kPa)	P(W)	q(l/s)	p(kPa)	Pa	dB(A)	dB(A)
216	60	1,8	761	0,061	5,1	871	0,069	6,5	982	0,078	8,1	1093	0,087	9,8	1204	0,096	11,8	97	30	34
		2,4	1000	0,080	11,7	1145	0,091	15,0	1276	0,102	2,6	1420	0,113	3,2	1565	0,125	3,8			
		3,0	1179	0,094	2,9	1361	0,108	3,8	1534	0,122	4,7	1707	0,136	5,6	1881	0,150	6,7			
		3,6	1364	0,109	4,6	1562	0,124	5,9	1761	0,140	7,3	1960	0,156	8,8	2159	0,172	10,6			
252	70	1,8	779	0,062	5,3	892	0,071	6,8	1005	0,080	8,4	1119	0,089	10,3	1233	0,098	12,3	102	33	37
		2,4	1036	0,082	12,5	1163	0,093	2,2	1322	0,105	2,8	1472	0,117	3,4	1621	0,129	4,0			
		3,0	1239	0,099	3,2	1424	0,113	4,1	1606	0,128	5,0	1787	0,142	6,1	1969	0,157	7,3			
		3,6	1436	0,114	5,1	1644	0,131	6,4	1853	0,148	8,0	2063	0,164	9,7	2273	0,181	11,6			

**Vita, vattenanslutning Ø 15 ***Gröna, vattenanslutining Ø 22

Table 5. Flow-adjusted effect table. Cooling circuit Δt = 3° C (Water in-out), nozzle pressure of 80 Pa, 2 x Ø 100 air connection.

Supply air beam Polaris I

Cooling effect, Polaris I

Nozzle pressure 100 Pa			Water															Air		
Q(m³/h)	Q(l/s)	Polaris I	Δt room - average water 7° C			Δt room - average water 8° C			Δt room - average water 9° C			Δt room - average water 10° C			Δt room - average water 11° C			Total pres-sure, duct	Noise pres-sure	Noise power
		L(m)	P(W)	q(l/s)	p(kPa)	P(W)	q(l/s)	p(kPa)	P(W)	q(l/s)	p(kPa)	P(W)	q(l/s)	p(kPa)	P(W)	q(l/s)	p(kPa)	Pa	dB(A)	dB(A)
72	20	1,2	365	0,029	0,9	447	0,036	1,2	522	0,042	1,6	591	0,047	2,0	656	0,052	2,4	102	25	29
		1,8	586	0,047	3,2	676	0,054	4,1	762	0,061	5,1	848	0,068	6,2	935	0,074	7,4			
		2,4	743	0,059	6,8	851	0,068	8,7	959	0,076	10,8	1068	0,085	13,2	1152	0,092	2,2			
		3,0	887	0,071	12,1	964	0,077	2,1	1117	0,089	2,7	1256	0,100	3,3	1388	0,111	3,9			
		3,6	977	0,078	2,6	1151	0,092	3,4	1310	0,104	4,3	1458	0,116	5,2	1606	0,128	6,2			
108	30	1,2	424	0,034	1,1	510	0,041	1,5	586	0,047	1,9	658	0,052	2,4	725	0,058	2,8	105	27	31
		1,8	675	0,054	4,1	773	0,062	5,2	871	0,069	6,5	969	0,077	7,9	1068	0,085	9,4			
		2,4	851	0,068	8,7	974	0,078	11,1	1098	0,087	13,9	1201	0,096	2,4	1331	0,106	2,8			
		3,0	956	0,076	2,0	1129	0,090	2,7	1288	0,103	3,4	1434	0,114	4,1	1579	0,126	4,9			
		3,6	1132	0,090	3,3	1312	0,104	4,3	1479	0,118	5,3	1646	0,131	6,5	1813	0,144	7,7			
144	40	1,2	452	0,036	1,2	538	0,043	1,7	615	0,049	2,1	687	0,055	2,6	757	0,060	3,0	109	30	34
		1,8	732	0,058	4,8	838	0,067	6,1	945	0,075	7,5	1052	0,084	9,2	1159	0,092	10,9			
		2,4	935	0,074	10,3	1071	0,085	13,3	1186	0,094	2,3	1329	0,106	2,8	1464	0,117	3,3			
		3,0	1079	0,086	2,5	1255	0,100	3,3	1419	0,113	4,1	1579	0,126	4,9	1740	0,139	5,8			
		3,6	1256	0,100	4,0	1443	0,115	5,1	1626	0,129	6,3	1810	0,144	7,7	1994	0,159	9,1			
180	50	1,2	472	0,038	1,3	559	0,044	1,8	638	0,051	2,2	710	0,057	2,7	783	0,062	3,2	115	34	38
		1,8	769	0,061	5,2	881	0,070	6,6	993	0,079	8,2	1105	0,088	10,0	1218	0,097	12,0			
		2,4	1000	0,080	11,7	1145	0,091	15,0	1276	0,102	2,6	1421	0,113	3,2	1565	0,125	3,8			
		3,0	1174	0,093	2,9	1355	0,108	3,7	1527	0,122	4,6	1700	0,135	5,6	1873	0,149	6,7			
		3,6	1358	0,108	4,6	1555	0,124	5,8	1753	0,140	7,2	1951	0,155	8,8	2150	0,171	10,5			

**Vita, vattenanslutning Ø 15 ***Gröna, vattenanslutining Ø 22

Table 6. Flow-adjusted effect table. Cooling circuit Δt = 3° C (Water in-out), nozzle pressure of 100 Pa, Ø 125 air connection.

For the red values, the flow is below the recommended minimum flow of 0.035 l/s at Δt = 3° C. Increase the flow to the recommended minimum flow.

Nozzle pressure 100 Pa			Water															Air		
Q(m³/h)	Q(l/s)	Polaris I	Δt room - average water 7° C			Δt room - average water 8° C			Δt room - average water 9° C			Δt room - average water 10° C			Δt room - average water 11° C			Total pres-sure, duct	Noise pres-sure	Noise power
		L(m)	P(W)	q(l/s)	p(kPa)	P(W)	q(l/s)	p(kPa)	P(W)	q(l/s)	p(kPa)	P(W)	q(l/s)	p(kPa)	P(W)	q(l/s)	p(kPa)	Pa	dB(A)	dB(A)
216	60	1,8	793	0,063	5,5	908	0,072	7,0	1023	0,081	8,7	1139	0,091	10,6	1255	0,100	12,7	117	31	35
		2,4	1048	0,083	12,7	1178	0,094	2,3	1338	0,107	2,8	1489	0,119	3,4	1640	0,131	4,1			
		3,0	1247	0,099	3,2	1433	0,114	4,1	1615	0,129	5,1	1798	0,143	6,2	1981	0,158	7,4			
		3,6	1442	0,115	5,1	1652	0,132	6,5	1862	0,148	8,1	2072	0,165	9,8	2283	0,182	11,7			
252	70	1,8	809	0,064	5,7	927	0,074	7,3	1044	0,083	9,0	1162	0,093	11,0	1281	0,102	13,2	122	34	38
		2,4	1083	0,086	13,5	1220	0,097	2,4	1382	0,110	3,0	1538	0,123	3,6	1695	0,135	4,3			
		3,0	1306	0,104	3,5	1496	0,119	4,4	1686	0,134	5,5	1877	0,149	6,7	2067	0,165	8,0			
		3,6	1513	0,121	5,6	1733	0,138	7,1	1954	0,156	8,8	2175	0,173	10,7	2396	0,191	12,8			

**Vita, vattenanslutning Ø 15 ***Gröna, vattenanslutining Ø 22

Table 7. Flow-adjusted effect table. Cooling circuit Δt = 3° C (Water in-out), nozzle pressure of 100 Pa, 2 x Ø 100 air connection.

We reserve the right to make changes

Supply air beam Polaris I

Heating effect, Polaris I

Nozzle pressure 60 Pa			Water															Air		
Q(m³/h)	Q(l/s)	Polaris I	Δt room - average water 20° C			Δt room - average water 25° C			Δt room - average water 30° C			Δt room - average water 35° C			Δt room - average water 40° C			Total pres-sure, duct	Noise pres-sure	Noise power
		L(m)	P(W)	q(l/s)	p(kPa)	P(W)	q(l/s)	p(kPa)	P(W)	q(l/s)	p(kPa)	P(W)	q(l/s)	p(kPa)	P(W)	q(l/s)	p(kPa)	Pa	dB(A)	dB(A)
72	20	1,2	599	0,014	0,1	856	0,020	0,2	1157	0,028	0,4	1466	0,035	0,5	1751	0,042	0,7	62	23	27
		1,8	1025	0,024	0,5	1455	0,035	0,9	1846	0,044	1,3	2191	0,052	1,7	2509	0,060	2,2			
		2,4	1435	0,034	1,2	1914	0,046	1,9	2327	0,056	2,7	2722	0,065	3,6	3117	0,074	4,5			
		3,0	1786	0,043	2,2	2284	0,055	3,3	2749	0,066	4,6	3216	0,077	6,2	3683	0,088	7,9			
		3,6	2084	0,050	3,5	2623	0,063	5,2	3157	0,075	7,3	3693	0,088	9,7	4229	0,101	12,5			
108	30	1,2	710	0,017	0,2	1025	0,024	0,3	1370	0,033	0,5	1697	0,041	0,7	1987	0,047	0,9	65	25	29
		1,8	1295	0,031	0,7	1765	0,042	1,2	2170	0,052	1,7	2539	0,061	2,2	2908	0,069	2,9			
		2,4	1752	0,042	1,6	2248	0,054	2,5	2706	0,065	3,5	3165	0,076	4,7	3625	0,087	6,0			
		3,0	2106	0,050	2,9	2642	0,063	4,3	3180	0,076	6,0	3719	0,089	8,1	4260	0,102	10,4			
		3,6	2399	0,057	4,5	3010	0,072	6,7	3622	0,087	9,4	4237	0,101	12,5	4852	0,116	16,1			
144	40	1,2	769	0,018	0,2	1113	0,027	0,3	1474	0,035	0,5	1805	0,043	0,7	2104	0,050	1,0	69	28	32
		1,8	1477	0,035	0,9	1958	0,047	1,4	2375	0,057	2,0	2777	0,066	2,6	3181	0,076	3,4			
		2,4	1976	0,047	2,0	2496	0,060	3,0	3004	0,072	4,2	3514	0,084	5,6	4025	0,096	7,3			
		3,0	2345	0,056	3,5	2942	0,070	5,3	3541	0,085	7,4	4142	0,099	9,8	4744	0,113	12,7			
		3,6	2668	0,064	5,4	3347	0,080	8,1	4028	0,096	11,4	4711	0,113	15,3	5396	0,129	19,7			
180	50	1,8	1592	0,038	1,0	2077	0,050	1,6	2509	0,060	2,2	2934	0,070	2,9	3361	0,080	3,7	75	32	36
		2,4	2141	0,051	2,3	2687	0,064	3,5	3234	0,077	4,9	3782	0,090	6,5	4332	0,103	8,3			
		3,0	2543	0,061	4,0	3191	0,076	6,1	3841	0,092	8,5	4492	0,107	11,4	5145	0,123	14,7			
		3,6	2900	0,069	6,3	3638	0,087	9,5	4379	0,105	13,3	5121	0,122	17,9	5866	0,140	23,1			

Table 8. Flow-adjusted effect table. Heating circuit Δt = 10° C (Water in-out), nozzle pressure of 60 Pa, Ø 125 air connection.

For the red values, the flow is below the recommended minimum flow of 0.035 l/s at Δt = 10° C. Increase the flow to the recommended minimum flow.

Nozzle pressure 60 Pa			Water															Air		
Q(m³/h)	Q(l/s)	Polaris I	Δt room - average water 20° C			Δt room - average water 25° C			Δt room - average water 30° C			Δt room - average water 35° C			Δt room - average water 40° C			Total pres-sure, duct	Noise pres-sure	Noise power
		L(m)	P(W)	q(l/s)	p(kPa)	P(W)	q(l/s)	p(kPa)	P(W)	q(l/s)	p(kPa)	P(W)	q(l/s)	p(kPa)	P(W)	q(l/s)	p(kPa)	Pa	dB(A)	dB(A)
216	60	1,8	1664	0,040	1,1	2157	0,052	1,7	2596	0,062	2,3	3037	0,073	3,1	3478	0,083	4,0	77	29	33
		2,4	2255	0,054	2,5	2829	0,068	3,8	3406	0,081	5,3	3983	0,095	7,1	4562	0,109	9,2			
		3,0	2705	0,065	4,5	3394	0,081	6,8	4085	0,098	9,6	4778	0,114	12,8	5472	0,131	16,6			
		3,6	3099	0,074	7,1	3888	0,093	10,7	4679	0,112	15,1	5473	0,131	20,2	6268	0,150	26,2			
252	70	1,8	1716	0,041	1,1	2210	0,053	1,8	2660	0,064	2,4	3112	0,074	3,2	3564	0,085	4,1	82	32	36
		2,4	2339	0,056	2,7	2934	0,070	4,1	3532	0,084	5,7	4131	0,099	7,6	4731	0,113	9,8			
		3,0	2835	0,068	4,9	3557	0,085	7,4	4282	0,102	10,5	5008	0,120	14,0	5735	0,137	18,1			
		3,6	3267	0,078	7,8	4099	0,098	11,8	4934	0,118	16,7	5770	0,138	22,4	6609	0,158	28,9			

Table 9. Flow-adjusted effect table. Cooling circuit Δt = 10° C (Water in-out), nozzle pressure of 60 Pa, 2 x Ø 100 air connection.

Supply air beam Polaris I

Heating effect, Polaris I

Nozzle pressure 80 Pa			Water															Air		
Q(m³/h)	Q(l/s)	Polaris I	Δt room - average water 20° C			Δt room - average water 25° C			Δt room - average water 30° C			Δt room - average water 35° C			Δt room - average water 40° C			Total pres-sure, duct	Noise pres-sure	Noise power
		L(m)	P(W)	q(l/s)	p(kPa)	P(W)	q(l/s)	p(kPa)	P(W)	q(l/s)	p(kPa)	P(W)	q(l/s)	p(kPa)	P(W)	q(l/s)	p(kPa)	Pa	dB(A)	dB(A)
72	20	1,2	643	0,015	0,1	924	0,022	0,2	1245	0,030	0,4	1563	0,037	0,6	1852	0,044	0,8	82	24	28
		1,8	1117	0,027	0,6	1566	0,037	1,0	1960	0,047	1,4	2310	0,055	1,9	2646	0,063	2,4			
		2,4	1556	0,037	1,3	2040	0,049	2,1	2466	0,059	3,0	2885	0,069	3,9	3304	0,079	5,0			
		3,0	1919	0,046	2,5	2431	0,058	3,7	2926	0,070	5,2	3422	0,082	6,9	3919	0,094	8,9			
		3,6	2232	0,053	3,9	2800	0,067	5,9	3370	0,081	8,2	3942	0,094	11,0	4515	0,108	14,1			
108	30	1,2	761	0,018	0,2	1100	0,026	0,3	1460	0,035	0,5	1790	0,043	0,7	2082	0,050	0,9	85	26	30
		1,8	1391	0,033	0,8	1868	0,045	1,3	2277	0,054	1,8	2663	0,064	2,4	3051	0,073	3,1			
		2,4	1863	0,045	1,8	2369	0,057	2,8	2851	0,068	3,9	3334	0,080	5,1	3819	0,091	6,6			
		3,0	2226	0,053	3,2	2793	0,067	4,8	3362	0,080	6,7	3932	0,094	8,9	4504	0,108	11,5			
		3,6	2544	0,061	4,9	3192	0,076	7,4	3842	0,092	10,5	4494	0,107	14,0	5147	0,123	18,0			
144	40	1,2	824	0,020	0,2	1190	0,028	0,4	1563	0,037	0,6	1895	0,045	0,8	2195	0,052	1,0	89	29	33
		1,8	1571	0,038	1,0	2056	0,049	1,5	2485	0,059	2,2	2906	0,069	2,9	3329	0,080	3,7			
		2,4	2081	0,050	2,2	2620	0,063	3,3	3154	0,075	4,6	3689	0,088	6,2	4225	0,101	7,9			
		3,0	2469	0,059	3,8	3098	0,074	5,8	3729	0,089	8,1	4361	0,104	10,8	4995	0,119	13,9			
		3,6	2817	0,067	5,9	3534	0,084	9,0	4253	0,102	12,6	4975	0,119	16,9	5698	0,136	21,8			
180	50	1,2	877	0,021	0,2	1264	0,030	0,4	1644	0,039	0,6	1978	0,047	0,9	2281	0,054	1,1	95	33	37
		1,8	1684	0,040	1,1	2178	0,052	1,7	2621	0,063	2,4	3066	0,073	3,1	3512	0,084	4,0			
		2,4	2243	0,054	2,5	2814	0,067	3,8	3387	0,081	5,3	3961	0,095	7,0	4537	0,108	9,1			
		3,0	2671	0,064	4,4	3351	0,080	6,7	4033	0,096	9,4	4717	0,113	12,5	5402	0,129	16,2			
		3,6	3053	0,073	6,9	3830	0,091	10,4	4609	0,110	14,7	5391	0,129	19,7	6174	0,148	25,4			

Table 10. Flow-adjusted effect table. Heating circuit Δt = 10° C (Water in-out), nozzle pressure of 80 Pa, Ø 125 air connection.

For the red values, the flow is below the recommended minimum flow of 0.035 l/s at Δt = 10° C. Increase the flow to the recommended minimum flow.

Nozzle pressure 80 Pa			Water															Air		
Q(m³/h)	Q(l/s)	Polaris I	Δt room - average water 20° C			Δt room - average water 25° C			Δt room - average water 30° C			Δt room - average water 35° C			Δt room - average water 40° C			Total pres-sure, duct	Noise pres-sure	Noise power
		L(m)	P(W)	q(l/s)	p(kPa)	P(W)	q(l/s)	p(kPa)	P(W)	q(l/s)	p(kPa)	P(W)	q(l/s)	p(kPa)	P(W)	q(l/s)	p(kPa)	Pa	dB(A)	dB(A)
216	60	1,8	1755	0,042	1,2	2252	0,054	1,8	2710	0,065	2,5	3170	0,076	3,3	3630	0,087	4,3	97	30	34
		2,4	2359	0,056	2,8	2959	0,071	4,1	3562	0,085	5,8	4166	0,100	7,7	4771	0,114	10,0			
		3,0	2835	0,068	4,9	3557	0,085	7,4	4281	0,102	10,5	5007	0,120	14,0	5735	0,137	18,1			
		3,6	3255	0,078	7,7	4083	0,098	11,7	4914	0,117	16,5	5748	0,137	22,2	6583	0,157	28,7			
252	70	1,8	1805	0,043	1,2	2305	0,055	1,9	2774	0,066	2,6	3245	0,078	3,5	3716	0,089	4,5	102	33	37
		2,4	2444	0,058	2,9	3066	0,073	4,4	3690	0,088	6,2	4316	0,103	8,3	4943	0,118	10,6			
		3,0	2968	0,071	5,3	3723	0,089	8,1	4481	0,107	11,4	5241	0,125	15,3	6003	0,143	19,7			
		3,6	3426	0,082	8,5	4298	0,103	12,9	5173	0,124	18,2	6050	0,145	24,5	6930	0,166	31,7			

Table 11. Flow-adjusted effect table. Cooling circuit Δt = 10° C (Water in-out), nozzle pressure of 80 Pa, 2 x Ø 100 air connection.

We reserve the right to make changes

Supply air beam Polaris I

Heating effect, Polaris I

Nozzle pressure 100 Pa			Water															Air		
Q(m³/h)	Q(l/s)	Polaris I	Δt room - average water 20° C			Δt room - average water 25° C			Δt room - average water 30° C			Δt room - average water 35° C			Δt room - average water 40° C			Total pres-sure, duct	Noise pres-sure	Noise power
		L(m)	P(W)	q(l/s)	p(kPa)	P(W)	q(l/s)	p(kPa)	P(W)	q(l/s)	p(kPa)	P(W)	q(l/s)	p(kPa)	P(W)	q(l/s)	p(kPa)	Pa	dB(A)	dB(A)
72	20	1,2	697	0,017	0,2	1006	0,024	0,3	1348	0,032	0,5	1673	0,040	0,6	1963	0,047	0,9	102	25	29
		1,8	1233	0,029	0,6	1698	0,041	1,1	2103	0,050	1,6	2460	0,059	2,1	2817	0,067	2,7			
		2,4	1705	0,041	1,6	2199	0,053	2,4	2647	0,063	3,4	3096	0,074	4,5	3546	0,085	5,7			
		3,0	2085	0,050	2,8	2624	0,063	4,3	3159	0,075	6,0	3695	0,088	8,0	4232	0,101	10,2			
		3,6	2421	0,058	4,5	3038	0,073	6,8	3656	0,087	9,5	4276	0,102	12,7	4898	0,117	16,4			
108	30	1,2	817	0,020	0,2	1181	0,028	0,4	1552	0,037	0,6	1885	0,045	0,8	2184	0,052	1,0	105	27	31
		1,8	1502	0,036	0,9	1984	0,047	1,4	2403	0,057	2,0	2811	0,067	2,7	3219	0,077	3,4			
		2,4	1995	0,048	2,0	2518	0,060	3,1	3030	0,072	4,3	3544	0,085	5,7	4060	0,097	7,4			
		3,0	2381	0,057	3,6	2987	0,071	5,4	3595	0,086	7,6	4205	0,100	10,1	4816	0,115	13,0			
		3,6	2734	0,065	5,6	3430	0,082	8,5	4128	0,099	11,9	4828	0,115	16,0	5529	0,132	20,6			
144	40	1,2	878	0,021	0,2	1265	0,030	0,4	1645	0,039	0,6	1980	0,047	0,9	2283	0,055	1,1	109	30	34
		1,8	1674	0,040	1,1	2167	0,052	1,7	2608	0,062	2,3	3050	0,073	3,1	3494	0,083	4,0			
		2,4	2206	0,053	2,4	2768	0,066	3,7	3332	0,080	5,1	3897	0,093	6,8	4463	0,107	8,8			
		3,0	2623	0,063	4,3	3291	0,079	6,4	3961	0,095	9,0	4632	0,111	12,1	5306	0,127	15,6			
		3,6	3006	0,072	6,7	3771	0,090	10,1	4539	0,108	14,2	5308	0,127	19,1	6080	0,145	24,7			
180	50	1,2	926	0,022	0,2	1330	0,032	0,4	1715	0,041	0,7	2051	0,049	0,9	2359	0,056	1,2	115	34	38
		1,8	1779	0,042	1,2	2277	0,054	1,8	2741	0,065	2,6	3205	0,077	3,4	3671	0,088	4,4			
		2,4	2359	0,056	2,8	2960	0,071	4,1	3562	0,085	5,8	4166	0,100	7,7	4772	0,114	10,0			
		3,0	2823	0,067	4,9	3542	0,085	7,4	4263	0,102	10,4	4986	0,119	13,9	5711	0,136	17,9			
		3,6	3241	0,077	7,7	4066	0,097	11,6	4893	0,117	16,4	5723	0,137	22,0	6555	0,157	28,5			

Table 12. Flow-adjusted effect table. Heating circuit Δt = 10° C (Water in-out), nozzle pressure of 100 Pa, Ø 125 air connection.

For the red values, the flow is below the recommended minimum flow of 0.035 l/s at Δt = 10° C. Increase the flow to the recommended minimum flow.

Nozzle pressure 100 Pa			Water															Air		
Q(m³/h)	Q(l/s)	Polaris I	Δt room - average water 20° C			Δt room - average water 25° C			Δt room - average water 30° C			Δt room - average water 35° C			Δt room - average water 40° C			Total pres-sure, duct	Noise pres-sure	Noise power
		L(m)	P(W)	q(l/s)	p(kPa)	P(W)	q(l/s)	p(kPa)	P(W)	q(l/s)	p(kPa)	P(W)	q(l/s)	p(kPa)	P(W)	q(l/s)	p(kPa)	Pa	dB(A)	dB(A)
216	60	1,8	1843	0,044	1,3	2346	0,056	1,9	2824	0,067	2,7	3303	0,079	3,6	3783	0,090	4,6	117	31	35
		2,4	2473	0,059	3,0	3102	0,074	4,5	3734	0,089	6,3	4367	0,104	8,4	5002	0,119	10,9			
		3,0	2986	0,071	5,4	3746	0,089	8,2	4509	0,108	11,5	5274	0,126	15,4	6040	0,144	20,0			
		3,6	3442	0,082	8,5	4318	0,103	13,0	5197	0,124	18,4	6078	0,145	24,7	6961	0,166	32,0			
252	70	1,8	1886	0,045	1,3	2394	0,057	2,0	2882	0,069	2,8	3371	0,081	3,7	3861	0,092	4,8	122	34	38
		2,4	2555	0,061	3,2	3205	0,077	4,8	3858	0,092	6,7	4512	0,108	9,0	5168	0,123	11,6			
		3,0	3116	0,074	5,8	3910	0,093	8,8	4706	0,112	12,5	5504	0,131	16,7	6304	0,151	21,6			
		3,6	3611	0,086	9,3	4531	0,108	14,2	5453	0,130	20,1	6378	0,152	27,0	7305	0,175	35,0			

Table 13. Flow-adjusted effect table. Cooling circuit Δt = 10° C (Water in-out), nozzle pressure of 100 Pa, 2 x Ø 100 air connection.

Sound data

Internal sound dampening ΔL

Hz	63	125	250	500	1000	2000	4000	8000
dB	21	16	9	7	14	13	15	18

Tabell 14. Polaris I dampening.

Supply air beam Polaris I

Couplings & connections

Polaris I is supplied in lengths from 1.2 m to 3.6 m in steps of 0.1 m. The connection dimension for the water is o.d. 15 mm or 22 mm, and 125 mm (single) and 100 mm (double) for the air.

Polaris I is available with a large number of coupling options. This is how to find the designation for the coupling option you require for Polaris I.

NB! Connections C and D have a higher noise value than is indicated in the quick selection charts, please check with Lindab.

Step 1.
Indicate the position for the ventilation connection.

Step 2.
Indicate the position for the pipe connection.

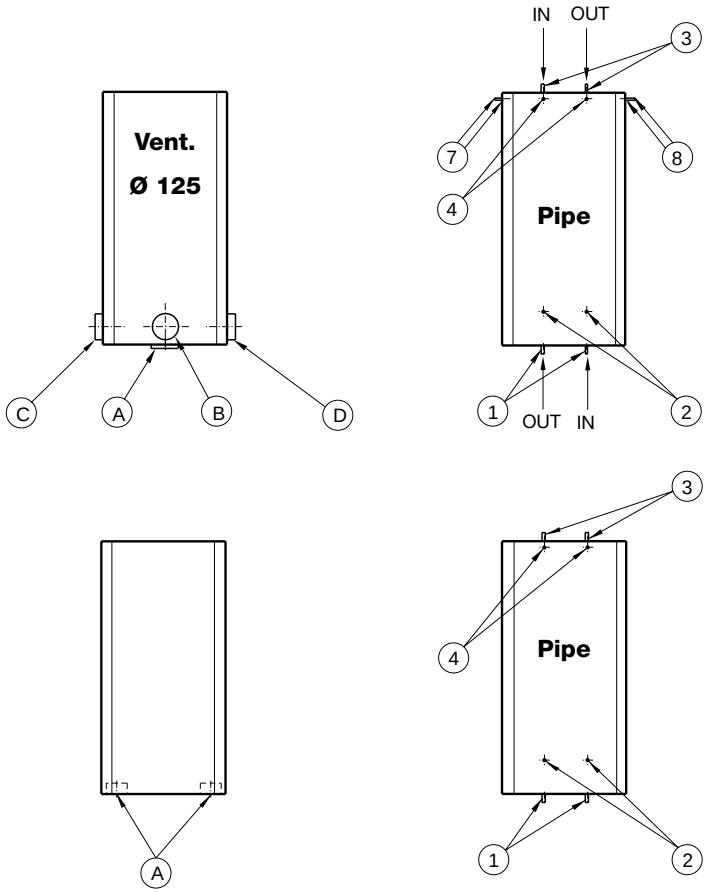

Figure 1. Coupling and connection options.

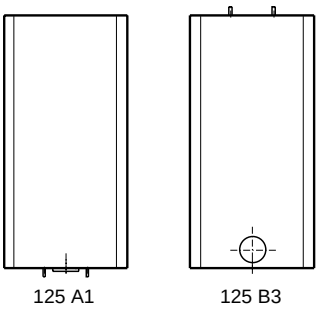

Figure 2. Coupling options A1 and B3, Ø125 mm air connection.

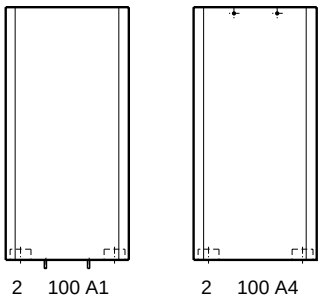

Figure 3. Coupling options A1 and A4. Ø100 mm air connection.

We reserve the right to make changes

Supply air beam

Polaris I

Width & height, mm

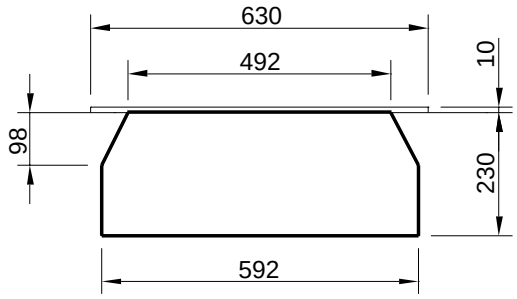

Length, m

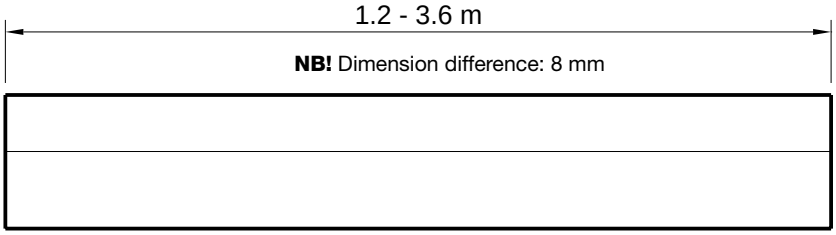

Dimensions, mm

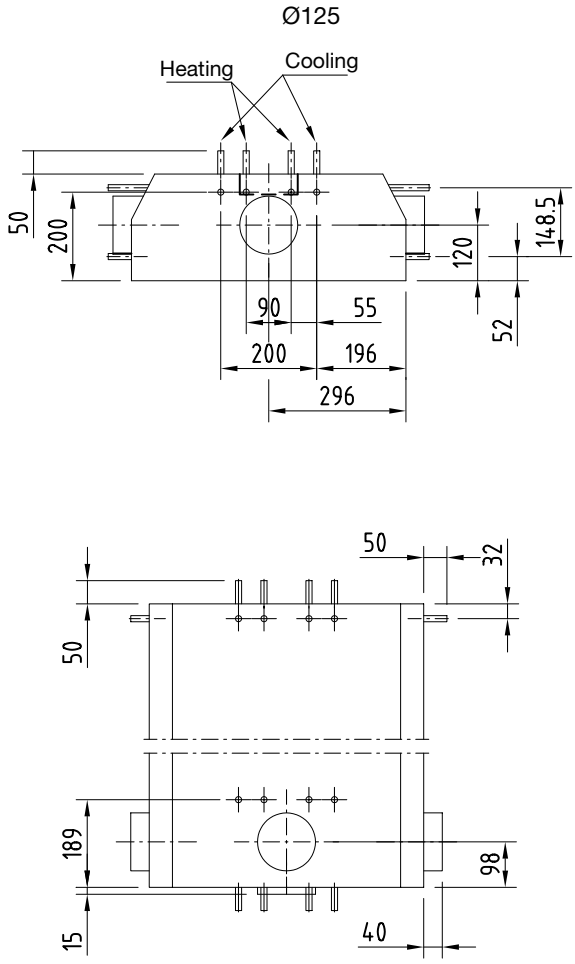

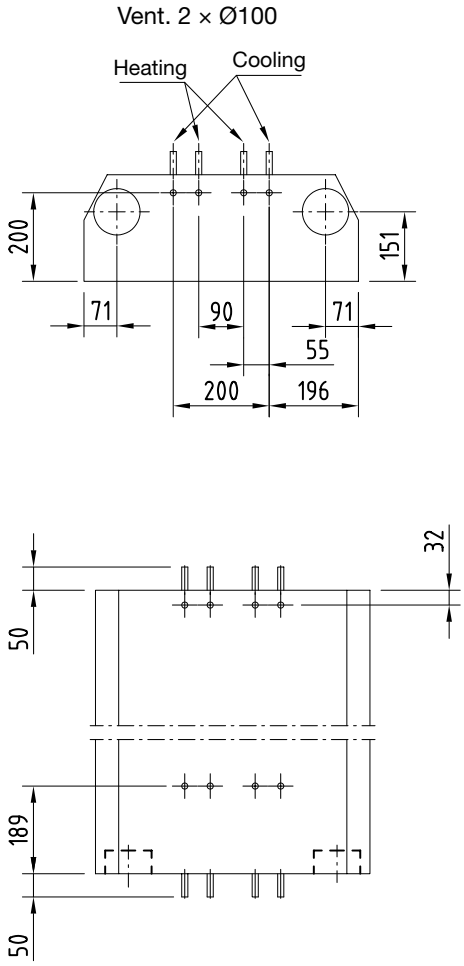

Figure 4. Polaris I 60 2 Ø 125 mm, dimensions.

Figure 5. Polaris I 60 2 x 100 mm, dimensions.

Supply air beam Polaris I

1
2
3
4
5
6
7
8
9
10
11
12
13
14
15
16
17
18
19

Weight and water volume

Weight, kg/m	21
Water content, l/m	1.3

Table 15. Polaris I 60, weight and water volume.

Installation examples

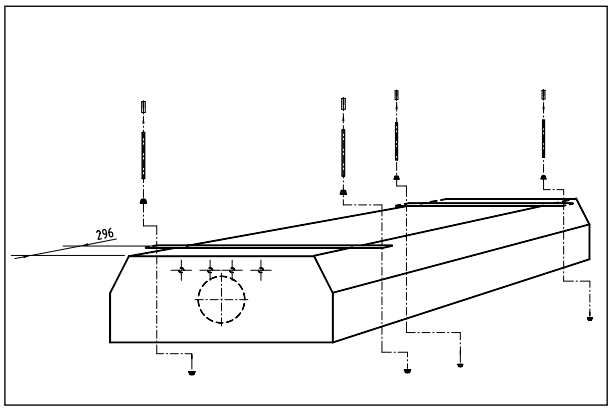

Figure 6. Polaris I 60 installation principle.

Note. Beams longer than 2.6 m, come with a suspension bracket in the middle.

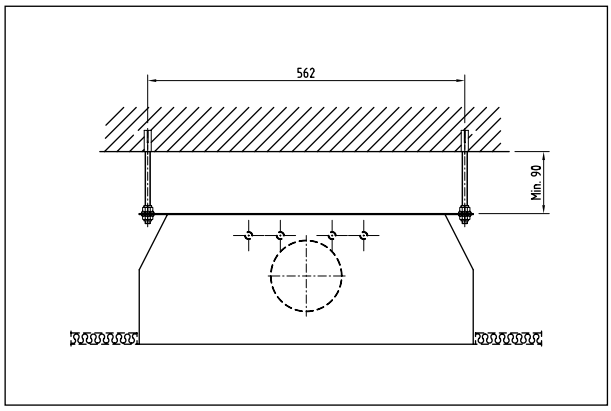

Figure 7. Polaris I 60 recessed in a suspended ceiling.

We reserve the right to make changes

Supply air beam

Polaris I

Distribution diagrams & throw lengths

Plafond and other induction beams utilise the pressure of the supply air to cause the room air to circulate through the cooling battery. This enables a high cooling effect, but also creates significant air movements, which often result in long throw lengths. This is why Plafond is supplied as standard with an air distribution that is angled outwards. It significantly reduces both throw lengths and air velocities compared to the conventional linear nozzle technology.

Depending on the room conditions, Plafond is also available with a long or a short distribution profile. Below is an example of how the nozzle angle affects the throw length and air velocity.

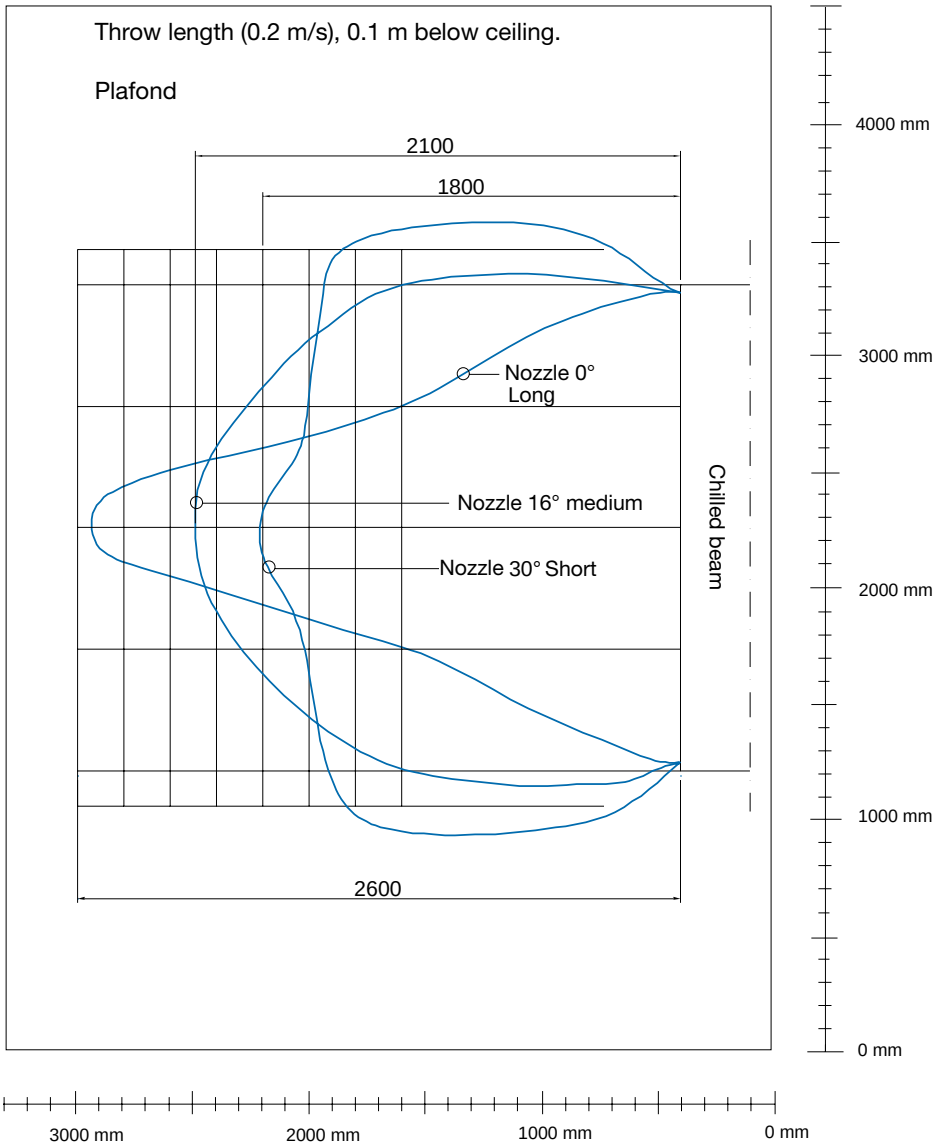

Figure 8. Polaris I 60 distribution profile, short 30°, medium 16° and long 0°.

Supply air beam

Polaris I

1
2
3
4
5
6
7
8
9
10
11
12
13
14
15
16
17
18
19

Long distribution profile

Height to the beam's lower edge: 2600 mm.
Airflow: 22 l/s per active metre.
Air duct pressure: 60 Pa.
ΔT room – mean water temperature: 9° C.
ΔT room – supply air temperature: 5° C.

Air velocities with long distribution profile (nozzle angle 0°).

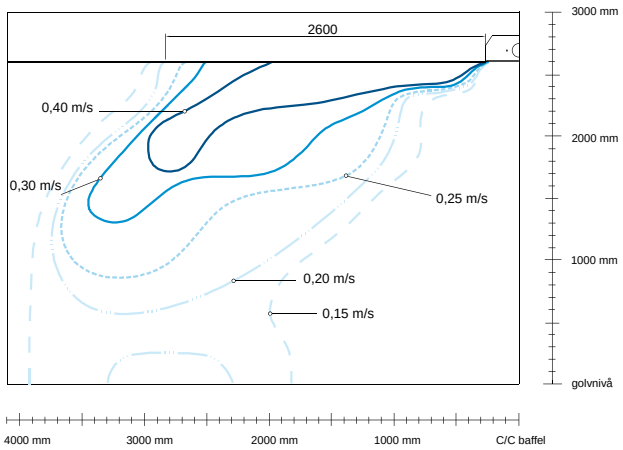

Medium distribution profile

Height to the beam's lower edge: 2600 mm.
Airflow: 22 l/s per active metre.
Air duct pressure: 60 Pa.
ΔT room – mean water temperature: 9° C.
ΔT room – supply air temperature: 5° C.

Air velocities with medium distribution profile (nozzle angle 16°).

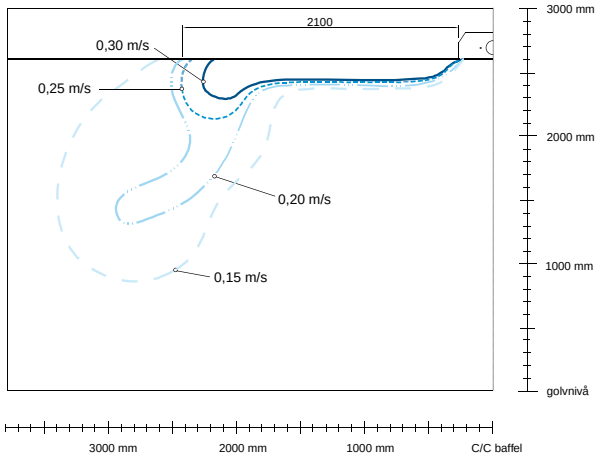

Standard distribution profile

Height to the beam's lower edge: 2600 mm.
Airflow: 22 l/s per active metre.
Air duct pressure: 60 Pa.
ΔT room – mean water temperature: 9° C.
ΔT room – supply air temperature: 5° C.

Air velocities with standard distribution profile (nozzle angle 30°).

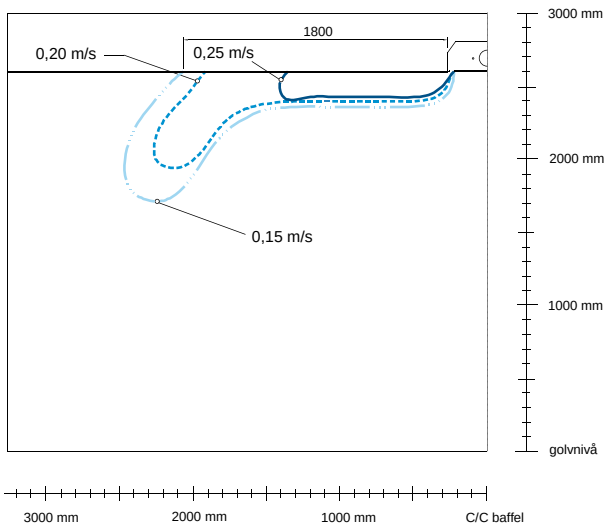

Figure 9-11. Polaris I 60 distribution profiles, standard (30°), medium (16°) and long (0°) at an airflow of 22 l/s per active metre and pressure of 60 Pa in the air duct.

We reserve the right to make changes

Supply air beam

Polaris I

Distribution diagrams, Polaris I

The measurements were conducted with cooled supply air (Δt room air – supply air) of 5° C and cooling in the water circuit (Δt – room air – mean water temperature) of 8° C. All heat supplied through the walls.

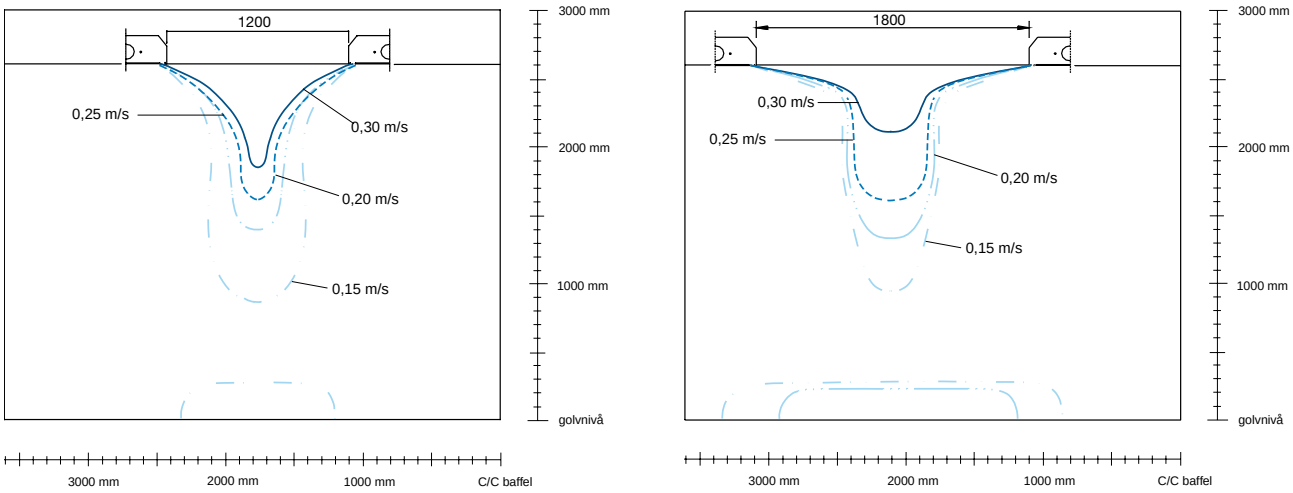

Figure 12 – 13. Air velocities below a chilled beam with an airflow of 16 l/s per active metre and a standard distribution profile (nozzles angled 30°)

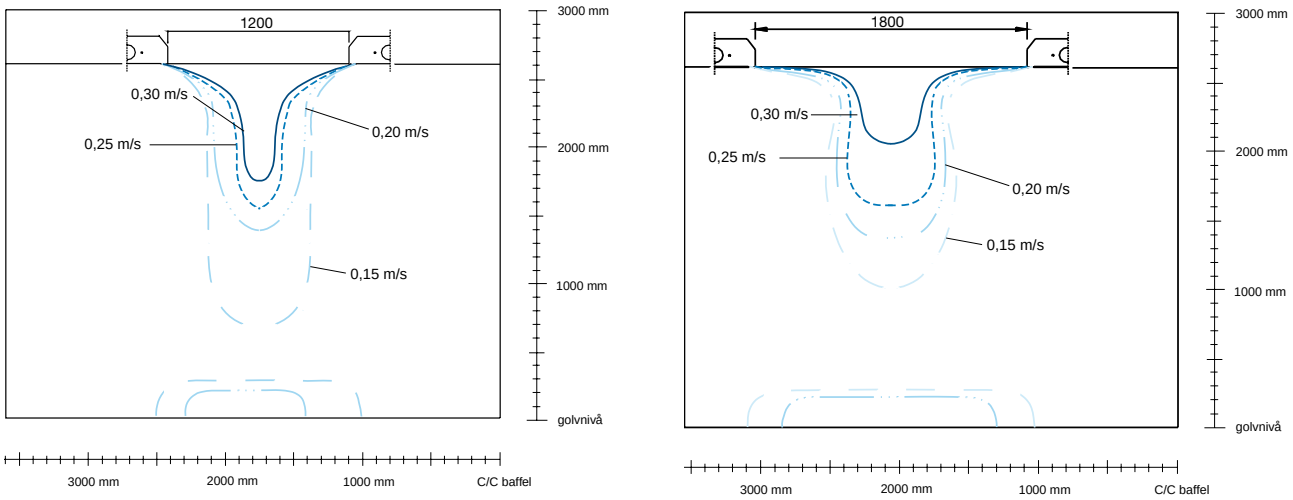

Figure 14 – 15. Air velocities below a chilled beam with an airflow of 22 l/s per active metre and a standard distribution profile (nozzles angled 30°)

Supply air beam

Polaris I

1
2
3
4
5
6
7
8
9
10
11
12
13
14
15
16
17
18
19

Distribution diagrams, Polaris I

The measurements were conducted with cooled supply air (Δt room air – supply air) of 5° C and cooling in the water circuit (Δt – room air – mean water temperature) of 8° C. All heat supplied through the walls.

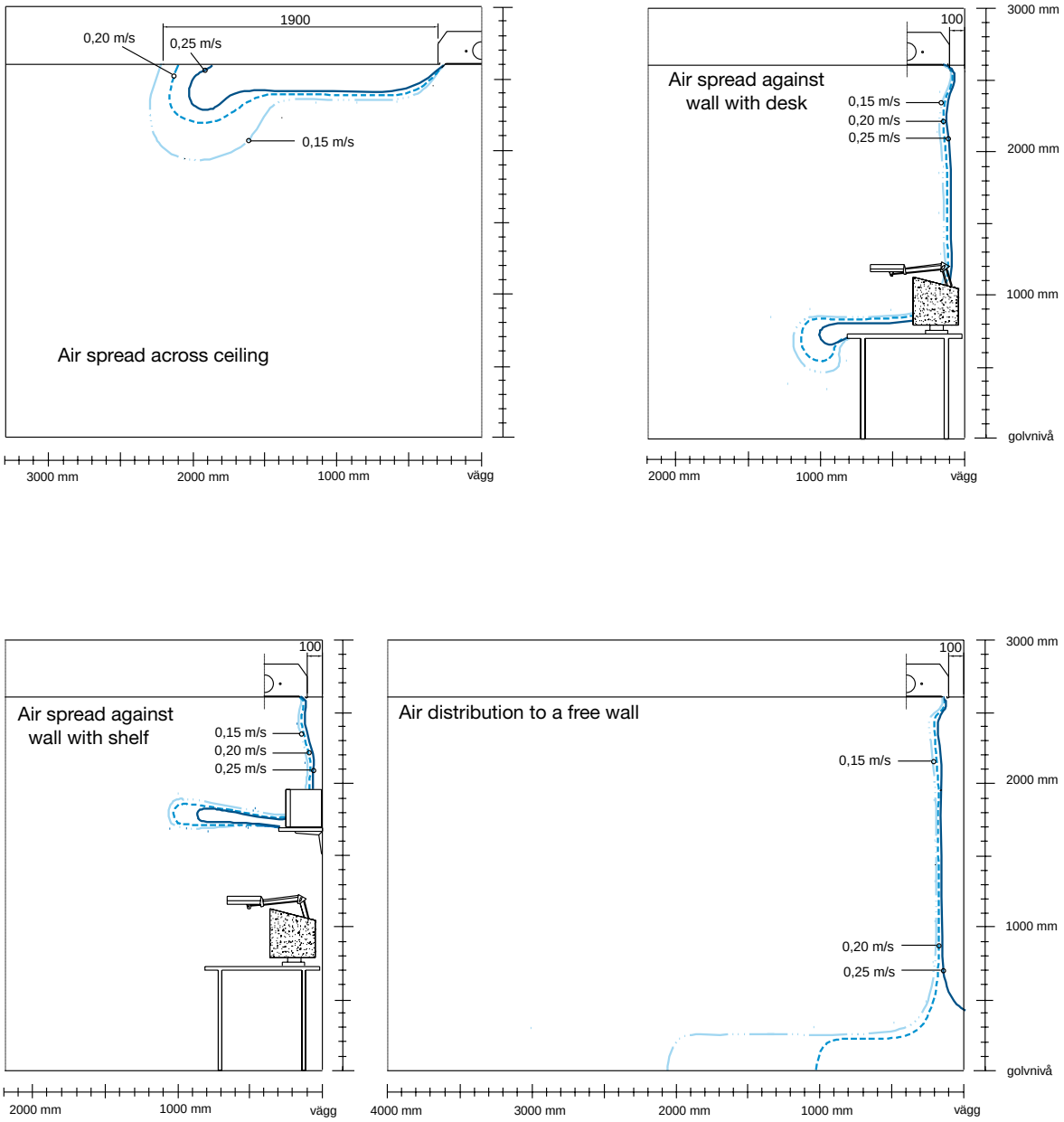

Figure 16-19. Air velocities below a chilled beam at an airflow of 16 l/s per active metre. Standard distribution profile (nozzles at a 30° angle).

We reserve the right to make changes

Supply air beam

Polaris I

Distribution diagrams, Polaris I

The measurements were conducted with cooled supply air (Δt room air – supply air) of 5° C and cooling in the water circuit (Δt – room air – mean water temperature) of 8° C. All heat supplied through the walls.

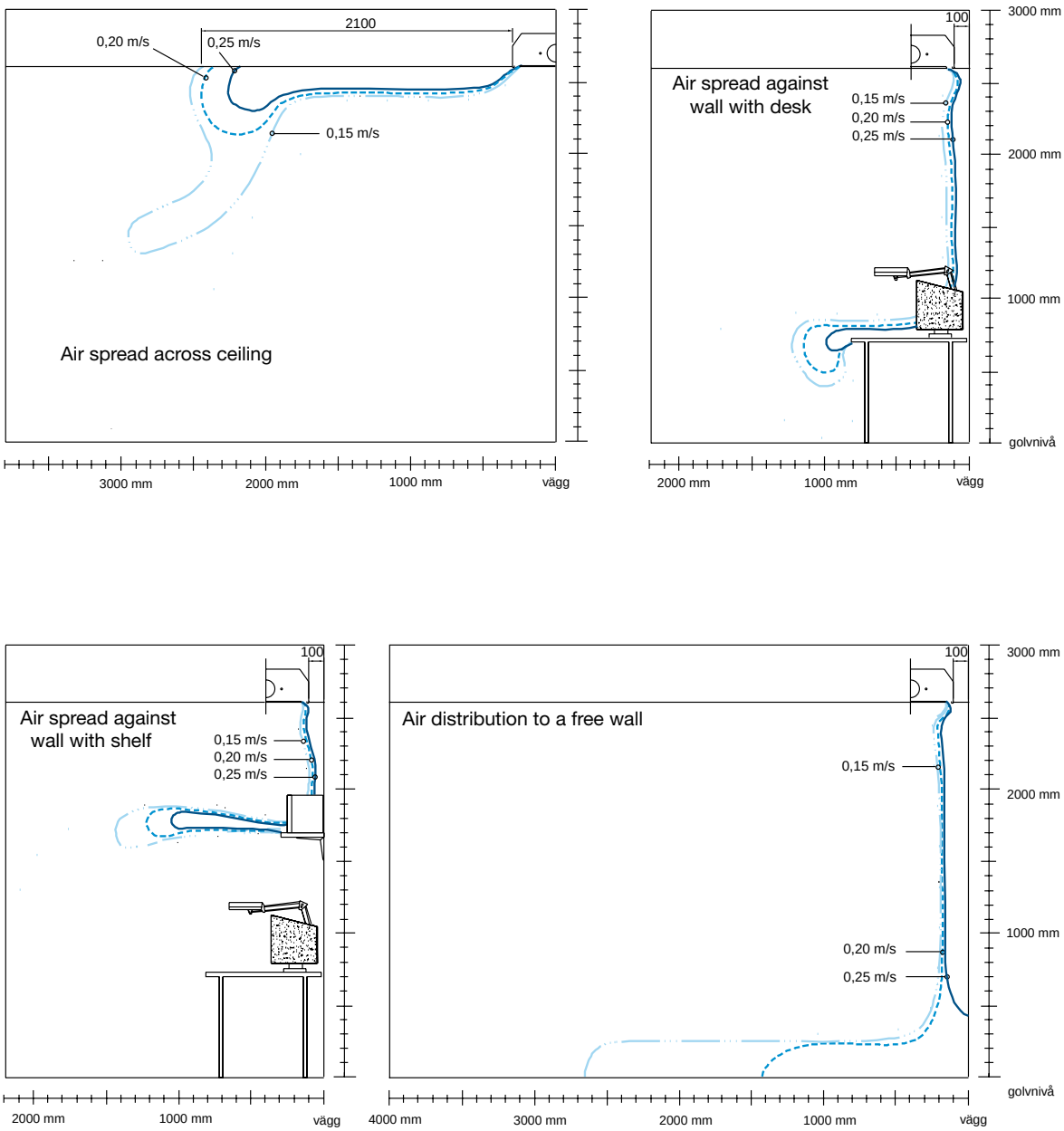

Figure 20-23. Air velocities below a chilled beam at an airflow of 22 l/s per active metre. Standard distribution profile (nozzles at a 30° angle).

Supply air beam Polaris I

1 2 3 4 5 6 7 8 9 10 11 12 13 14 15 16 17 18 19

Distribution diagrams, Polaris I

The measurements were conducted with cooled supply air (Δt room air – supply air) of 5° C and cooling in the water circuit (Δt – room air – mean water temperature) of 8° C. All heat supplied through the walls.

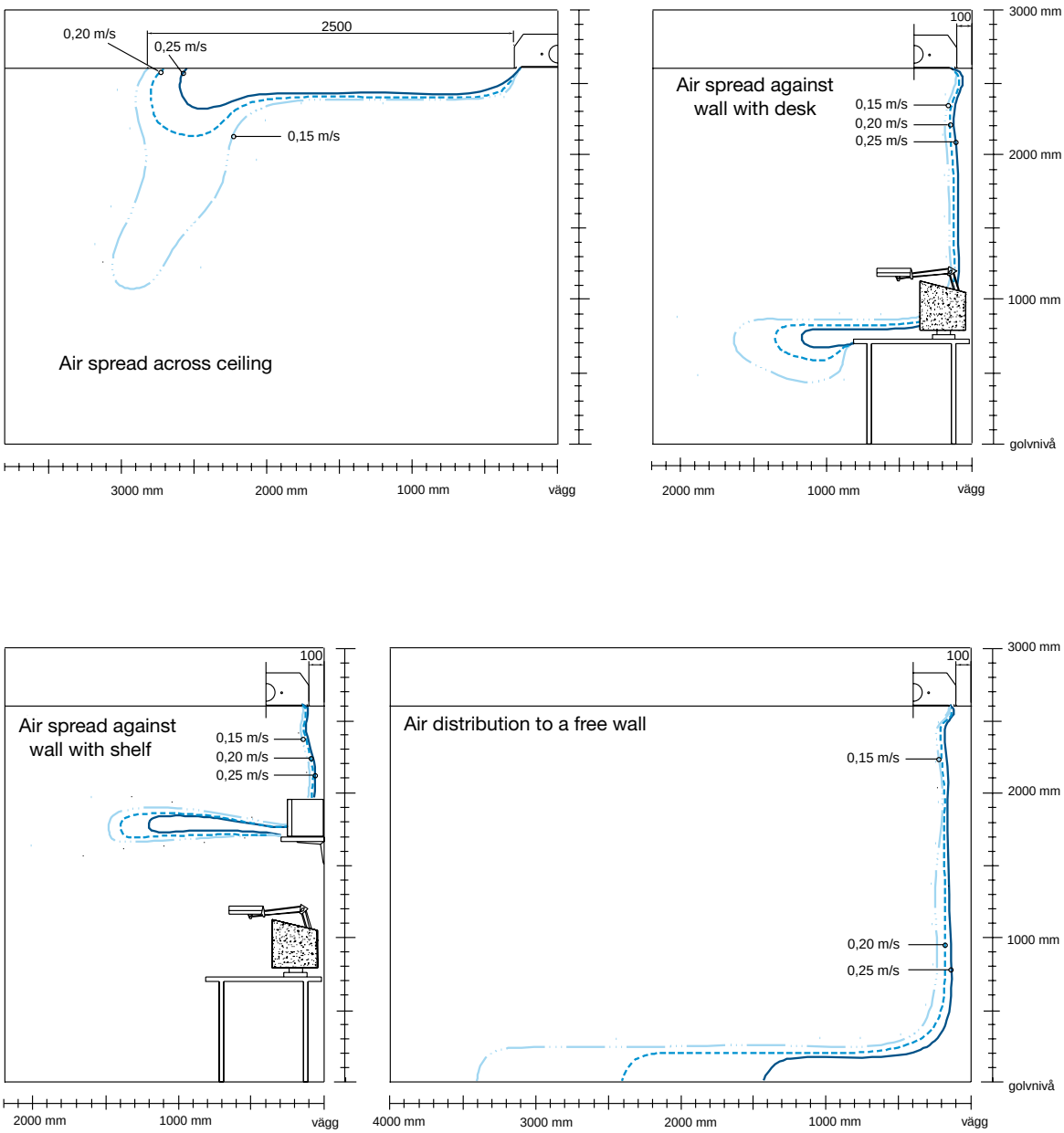

Figure 24-27. Air velocities below a chilled beam at an airflow of 28 l/s per active metre. Standard distribution profile (nozzles at a 30° angle).

We reserve the right to make changes

Supply air beam Polaris I

Pressure drop in water circuit, cooling

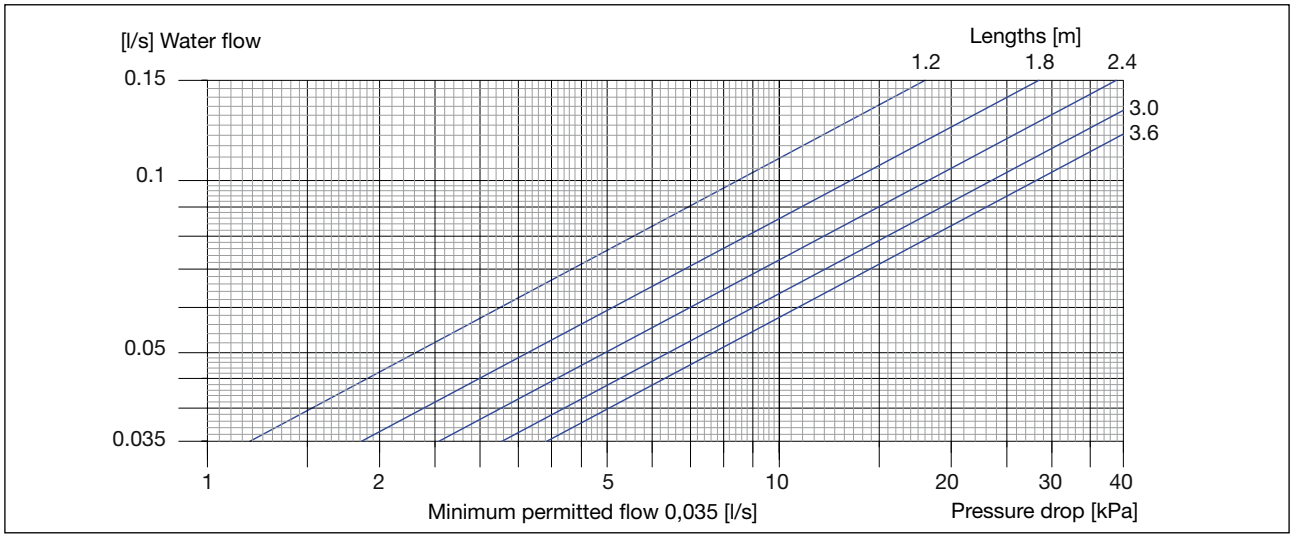

Diagram 4. Pressure drop in water circuit, cooling Ø15.

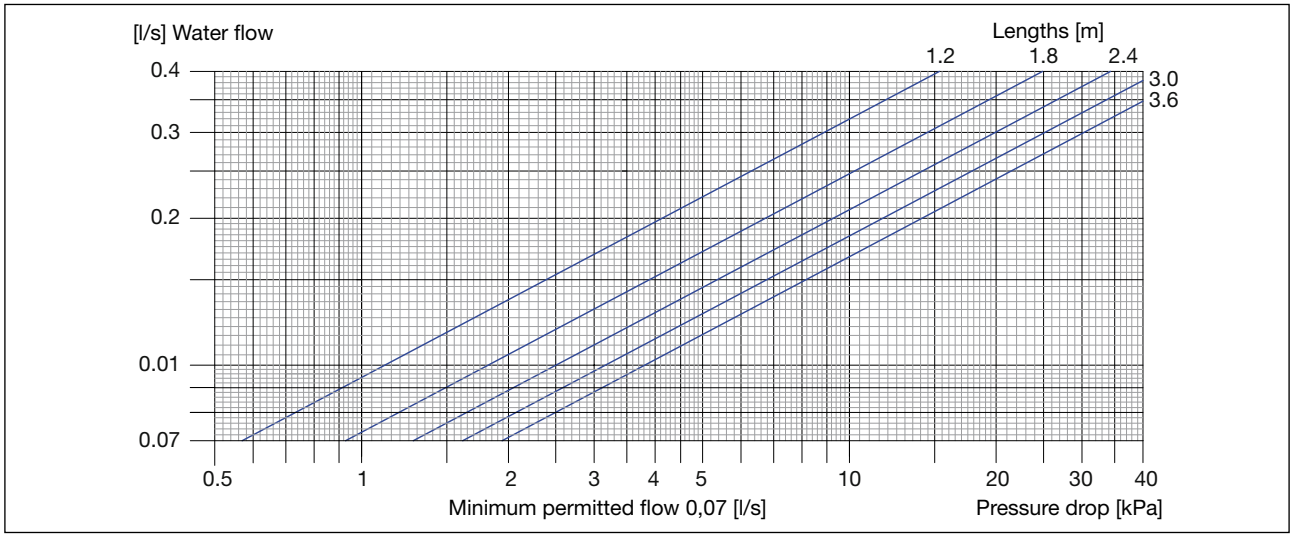

Diagram 5. Pressure drop in water circuit, cooling Ø22.

$q_w = P / (C_p \times \Delta t)$

q_w = water flow [l/s]
P = effect [W]
C_p = specific heat capacity [J/(kg·K)]
Δt = temperature difference in the water circuit in/out [K]

Example:

Polaris I 1.8 m with 12 mm water connection gives an output of 737 W.
Δt = 3 K
q_w = 737 / (4200 x 3) = 0.058 l/s
The pressure drop in the water circuit in diagram 4 is read off as 4.8 kPa.

Supply air beam Polaris I

1
2
3
4
5
6
7
8
9
10
11
12
13
14
15
16
17
18
19

Pressure drop in water circuit, heating

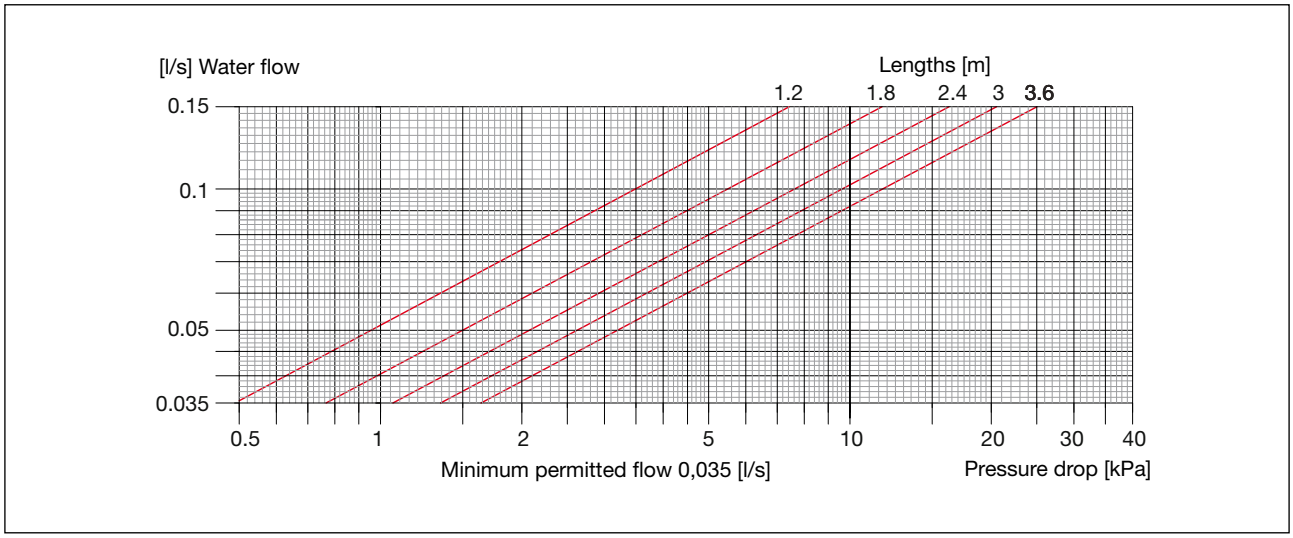

Diagram 6. Pressure drop in water circuit, heating Ø 15.

$q_w = P / (C_p \times \Delta t)$

q_w = *water flow [l/s]*
P = effect [W]
C_p = *specific heat capacity [J/(kg·K)]*
Δt = *temperature difference in the water circuit in/out [K]*

Example:

Polaris I 1.8 m which gives an output of 1942 W
$\Delta t = 10$ *K*
$q_w = 1942 / (4200 \times 10) = 0.046$ *l/s*
The pressure drop in the water circuit in diagram 6 is read off as 1.5 kPa.

We reserve the right to make changes

Supply air beam Polaris I

Control

Lindab offers control equipment that is very simple to use. To avoid heating and cooling being activated at the same time, the systems are controlled sequentially (Regula Combi). It is also possible to control only the heating or the cooling (Regula Mono). For the technical data, refer to the chapter Regula.

Colour

Polaris I is powder-coated as standard in white, RAL 9010, gloss value 30. Other colours may be ordered specially.

Designations

Product/Version:	Polaris I
Width, [cm]:	60
Connection diam. water, [mm]:	15 or 22
Connection diam. air, [mm]:	2 x 100 or 1 x 125
Coupling options:	Air: A, B, C or D
Water:	1, 2, 3, 4, 7, 8
Length, [m]:	Length in metres
Air quantity, [l/s]:	Must always be specified
Nozzle pressure, [Pa]:	Must always be specified
Distribution profile:	Standard (30°) Medium (16°) Long (0°)
Plus features:	See page 204

Programme text

Supply air beams from Lindab	**Qty**
Product:	
Polaris I-60-15-125-A1-1.8 m	40
Air quantity:	20 l/s
Nozzle pressure:	60 Pa
Distribution profile:	Medium (16°)
Plus features:	
Drypac:	
Regula Combi:	
Regula Secura:	
Control valve, cooling:	
Actuator, cooling:	
Accessories:	No
Product:	
Polaris I-60-22-100-A4-3.0 m	20
Air quantity:	50 l/s
Nozzle pressure:	60 Pa
Distribution profile:	Short (30°)
Plus features:	
Drypac:	
Heating:	
Regula Secura:	
Control valve, cooling:	
Actuator, cooling:	
Control valve, heating:	
Actuator, heating:	
Accessories:	
Regula Combi:	20

Supply air beam

Polaris S

Use

Lindab's supply air beam Polaris S has a large cooling capacity, uses one-way air injection and can therefore be used to advantage in rooms with small spaces and substantial cooling requirements.

In terms of appearance, Polaris S in width 60 looks similar to Polaris I and Professor. Polaris/Professor can therefore be used alternately in the same room to provide an architectonic uniform appearance in the room. Polaris S is equipped with divergent nozzles, which results in a draft-free indoor climate.

Polaris S can be used for cooling, heating and ventilation. Polaris S can be provided with the following features Drypac™ condensation protection, Regula Secura condensation guard, built-in valves and actuators, built-in exhaust air valve, etc. The product offers many possibilities and great flexibility.

Installation

Polaris S is available for integrated installation. Polaris S is installed as an integral part of a suspended ceiling, where the beam is mounted on a standard T-support. Polaris S can be supplied with horizontal and vertical connections.

Worth noting

Polaris S is equipped with a large cooling battery, in one side of the beam, which provides a large cooling capacity through one-way air injection. Lindab's supply air beams are Eurovent-certified and tested according to EN-15116, EN-14518.

Key figures

Length: 1.2 – 3.6 m
Width: 292 mm (30) in total. 592 mm (60)
Height: 230 mm
Capacity: Cooling effect of up to 1390 W
Air quantity of up to 40 l/s

Supply air beam Polaris S

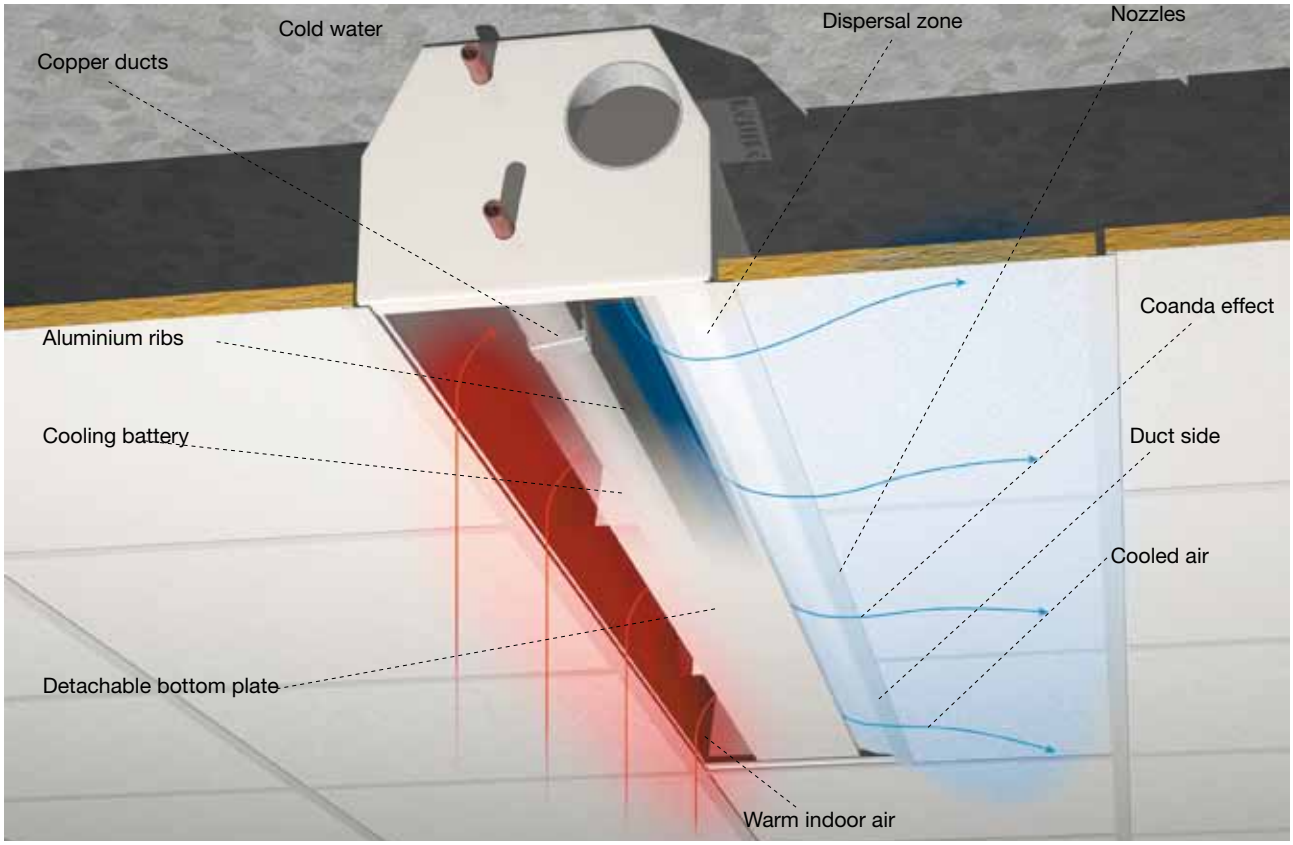

Picture 1. Polaris S is based on the induction principle.

Function

Powerful function with one-way air distribution

Lindab's supply air beam, Polaris S, is based on the induction principle (see picture 1). Ventilation air with a certain dynamic pressure is released through specially formed nozzles into a dispersal zone, thereby creating a low static pressure. This low pressure causes warm air from the room to be sucked into the ventilation air passing through the battery. The volume of warm indoor air is 4 to 5 times that of the ventilation air. The air is cooled as it passes through the battery, which consists of aluminium ribs with copper pipes filled with cold running water. The heat of the room is absorbed through the aluminium ribs and then transferred through the copper pipe into the water circuit and then on to a central cooling unit. Despite the small external dimensions of the product, the construction makes it possible to achieve a high cooling effect.

The nozzles releasing the ventilation air are designed to maintain the Coanda effect, i.e. the adhesive capacity of the air in the duct, in the nozzles. The air then follows the side of the duct on to the ceiling. The side of the beam is shaped so as to transfer the Coanda effect to the ceiling of the room.

If both heating and cooling are required, there is an extra pipe in the battery, which heats the room.

We reserve the right to make changes

Supply air beam Polaris S

Picture 2. From left to right: Polaris S-60, Polaris S-30 and Polaris S-60 with fitted acoustic ceiling tiles

Construction

Compact and flexible

Polaris S is equipped with a vertical battery and a lateral air duct. This makes it possible to make the product only 30 cm wide, while retaining a very high cooling effect.

The product is fitted with a hood on the top, which isolates the circulating room air from the suspended ceiling. The hood also protects against noise transfer through the beam. For the best possible accessibility for cleaning, suspension, adjustment or maintenance, the whole bottom of the Polaris S can be removed. The product is supplied with a factory-preset airflow and air pressure drop. The air is supplied to the room through Coanda nozzles placed along the air duct. In terms of noise, the nozzles are shaped like an inverted trumpet, i.e. somewhat negatively directed at the outlet, which also leads to very low noise. The nozzles are easily accessible from below for plugging, if you wish to change the pressure and flow pattern at a later time. Polaris S is supplied in widths of 30 and 60 cm (see picture 2). The dimensions of the wider model are suited for installation in a suspended ceiling. This helps the product blend in the suspended ceiling.

The water pipes are made of copper. Nevertheless, the water should be oxygen-free to prevent corrosion.

Hygiene

Accessibility from below

The requirement for all parts of the beam to be easy to clean is met by the removable bottom (see picture 3). The vertical battery is accessible from three sides and thus can be cleaned thoroughly. The same applies to the Coanda nozzles, which can easily be cleaned from below. Where the beam is equipped with built-in valves and control devices, these are also accessible from below. The air duct is cleaned through the removable cleaning hatch in the end-piece of the product (see picture 4). All of this allows thorough cleaning of the product.

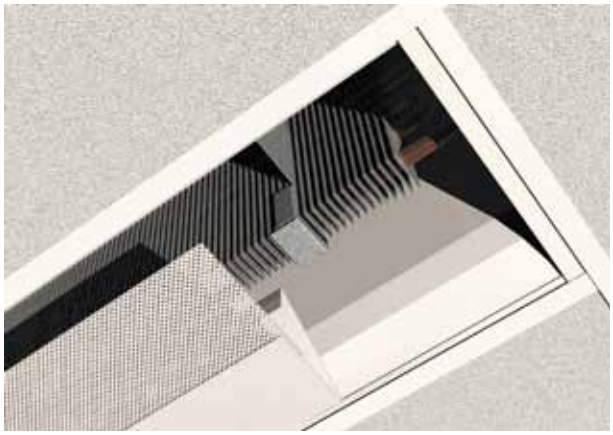

Picture 3. Loosening the bottom plate makes the battery easily accessible.

Picture 4. The air duct is cleaned through the cleaning hatch on the end-piece.

Supply air beam

Polaris S

1
2
3
4
5
6
7
8
9
10
11
12
13
14
15
16
17
18
19

Room environment

Flexible ventilation principle

The Polaris S ventilation principle can be designed in many different ways. Depending on the room conditions and the desired function, the product can be placed along corridor walls, side walls or frontages. The air can be directed out across the ceiling and down along the wall. This leads to very high flexibility regarding the selection of the ventilation principle in each room. In some cases, conventional supply air beams, which spread the air in linearly, can create high air velocities, because the air stream becomes compressed and concentrated towards the centre. To reduce air velocities, Polaris S has a fan-shaped distribution pattern as standard. The outer nozzles point slightly outwards, which leads to air velocities significantly lower than with conventional supply air beams with a linear outlet.

Air injection across ceiling
In this case, the cooled or heated air is spread across the ceiling until it reaches the walls where it is driven down into the room.

The heated air is then absorbed from the room and fed to the beam for continued cooling or heating.

Air injection across wall
In this case, the cooled or heated air is spread down along the wall until it reaches the floor, where it is driven out into the room at a reduced speed. The heated air then rises and is ducted into the beam for further cooling or heating.

Placement at the rear or front edge of the room
Placing a Polaris S at the rear or front edge of the room results in a very discreet ceiling installation. The ceiling area in the middle of the room is left free, which provides great freedom for the positioning of lights, for example. As the air in Polaris S can be directed either across the ceiling or down along the wall, high air velocities in the occupied area can be avoided. At the same time, there are possibilities for coordinating the product's function with the air movements generated by the room's internal heat sources.

Picture 5. Polaris S-30 installed at the ceiling's rear edge, with air injection across the ceiling.

Picture 6.Polaris S-30 installed at the rear edge, with air injection along the wall.

We reserve the right to make changes

Supply air beam Polaris S

Data

Variants

Size: The width of Polaris S is either 292 mm (width 30) or 592 mm (width 60). The height is 240 mm (incl. fixings).

Lengths: Polaris S is available in lengths from 1.2 m to 3.6 m in steps of 0.1 m..

Water connection: The cooling water connection is available in o.d. 15 mm. Both horizontal and vertical connections are available as part of the standard package. The connection for the heating pipes is o.d. 15 mm.

Air connection: Available in Ø 100 mm; both horizontal and vertical connections are available as standard.

Design: Polaris S is available with different types of bottom plates. The bottom plate is perforated with Slot 4 x 20 mm as standard, but other surfaces are also available.

Nozzle angle: The nozzles can be ordered with different angles, 0°, 16° or 30°. The default one is 30°.

Anti-crosstalk hood: It is included in the standard package to prevent the spread noise to adjoining rooms, but also when there is a requirement for the room air not to come into contact with the space above the suspended ceiling.

Surface treatment: Polaris S is manufactured as standard from enamelled sheet metal, coloured white, RAL 9010.

Airflow control: The product has a preset pressure drop value, so on-site adjustment is not necessary. A prerequisite is that the duct system in the building has a relatively low-pressure drop compared to that of the product. Where a damper is desired, you can order Lindab's balancing damper.

Plus features

Factory preinstalled.

Heating: Polaris S can be supplied with a heating function. An additional coil in the battery heats the room.

Drypac™: Anti-condensation treated cooling batteries that enable water temperatures below the dew point without dripping. Refer to the chapter Drypac™.

Integrated valve and actuator: A control valve, with variable Kv value, and an actuator can be preinstalled in the product.

Air vent: Air vents are not supplied as part of the standard package but it is possible to order to have them preinstalled.

Regula Secura condensation protection: There is an option to have Lindab's Regula Secura condensation guard installed in the product (refer to chapter Regula).

Connect: The product can be equipped with Regula Connect connection card (refer to chapter Regula).

Adaptation to suspended ceiling: The product can be adapted to most types of suspended ceilings available on the market.

Accessories

Delivered separately.

Control: Refer to the chapter Regula.

Supply air beam

Polaris S

1
2
3
4
5
6
7
8
9
10
11
12
13
14
15
16
17
18
19

Dimensioning

Cooling capacity air P_a

1. Start by calculating the capacity required for the room, to keep a certain temperature. Lindab's TEKNOsim is an excellent tool for this.
2. Calculate which cooling capacity, or read in diagram 1, that is supplied by the ventilation air
3. Remaining cooling capacity needs to be cooled by the water circuit in Polaris S

The formula for calculating the capacity air:

$P_a = q_{ma} \times c_{pa} \times \Delta t_{ra}$

Where:

q_{ma} = Air mass flow rate [kg/s]

c_{pa} = Specific heat capacity air [1,004 kj/kg K]

Δt_{ra} = Temperature difference between room air temperature and primary air temperature [K]

Size comparison by t_r, = 25°C with:

q_a = Primary air flow rate

P_a [W] = q_a [l/s] x 1,2 Δt_{ra} [K] and

P_a [W] = q_a [m³/h] x 0,33 Δt_{ra} [K]

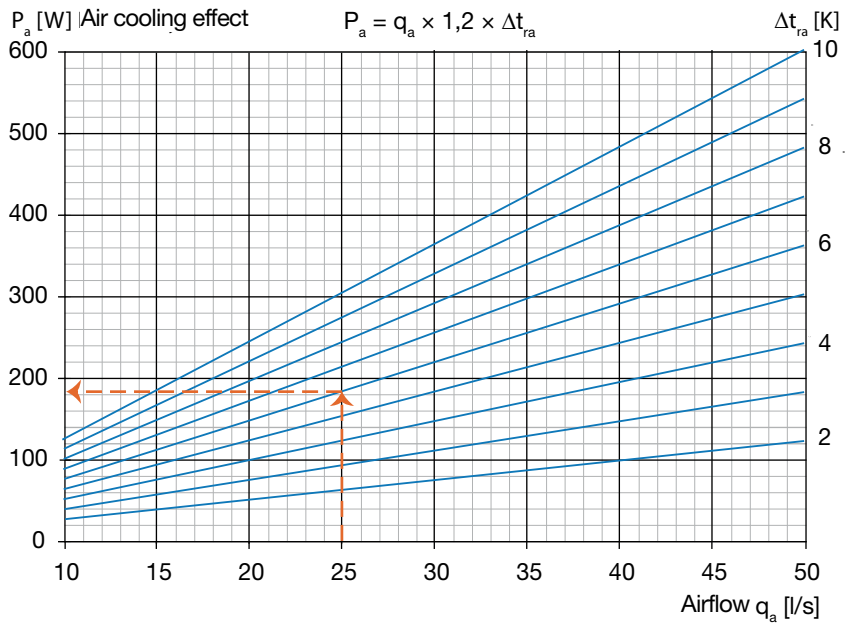

Diagram 1. Cooling capacity P_a, as function of the air quantity q_a. If the air supply is 25 l/s and the temperature difference of the supply Δt_{ra} = 6 K, then the cooling capacity in the chart is 180 W.

We reserve the right to make changes

Supply air beam Polaris S

Dimensioning

Effect diagram

Follow the instructions below, to read off the effect from the diagram.

1. Calculate Δt_{rw} (room – mean water)
2. Product length L minus 0.3 m, to obtain the active length L_{act}.
3. Divide the airflow q_a by the active length L_{act}. Enter the result on the horizontal axis of diagram 2.
4. Follow the flow line to the right pressure, and then read off the effect P_{Lt} per active metre.
5. Multiply the effect, which was read off, by Δt_{rw}.
6. Then, multiply by the active length L_{act}.

Cooling
What is the cooling effect of a 2.4 m Polaris S with 20 l/s and pressure of 100 Pa?
The room's summer temperature is assumed to be t_r 24.5° C
The cooling water temperature in/out of Polaris S is 14/17° C

Answer
The temperature difference $\Delta t_{rw} = t_r - (t_{wi} + t_{wo})/2$
Δt_{rw} = 24.5 - (14+17) / 2 = 9 K
Active length: L_{act} = 2.4m - 0.3 m = 2.1 m
20 l/s / 2.1 m = 9.5 l/(s m)

Read off from diagram 2: P_{Lt} 33.7 W/(m K).
Cooling effect P_w = 33.7 × 9 K × 2.1 m = 637 W

NB! The effect diagram applies for a nominal flow of q_{wn} 0.038 l/s. To obtain the right effect at other flows, read off the effect factor from diagram 3 and multiply the effect that is read off by this factor (see example 1).

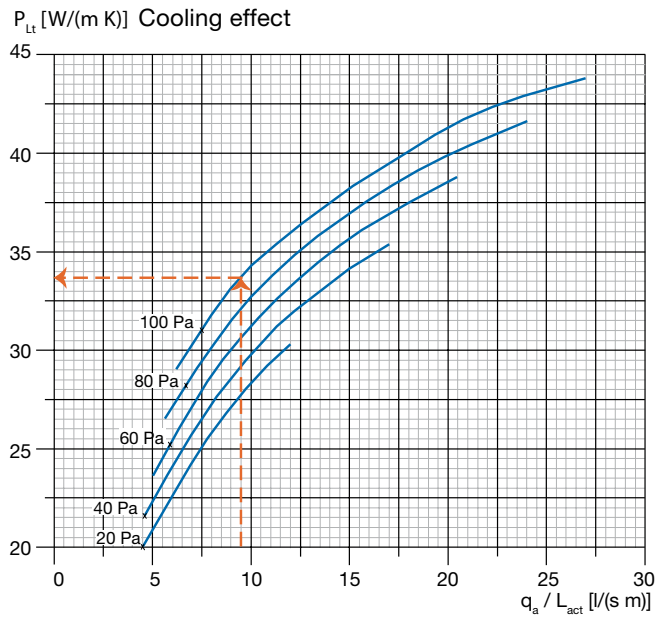

Diagram 2. Effect per active metre P_{Lt} as a function of airflow per active metre at nozzle pressures of 20, 40, 60, 80 and 100 Pa.

Dimensioning

Pressure drop in air connection (Pa)

Table 1, below, shows the pressure drop in the connection. After calculating the necessary pressure for the supply air beam, add it to the selected static pressure in the nozzles.

Example

Polaris S-30-15-100-C7L-2.4 with 20 l/s and a static nozzle pressure of 60 Pa. This provides a necessary total pressure in the duct of 60 Pa + 8 Pa = 68 Pa.

Polaris S							
Airflow (l/s)	10	15	20	25	30	35	40
Pa	3	5	8	12	17	22	28

Table 1. Air pressure drop in the connection to Polaris S.

Supply air beam Polaris S

Dimensioning

Flow-adjusted effect factor ϵ

Example 1

Cooling
Read off the effect from the effect diagram and calculate your flow with the following formula: $q_w = p_w / (c_{pw} \times \Delta t_w)$

Where:
q_w = water flow [l/s]; (1 l = 1dm³ = 1 kg)
p_w = effect [W]
c_{pw}= specific heat capacity [4200 Ws/(kg K)]
$\Delta t_w = t_{wo} - t_{wi}$ =temperature difference in the water circuit in/out [K]

For example q_w = 637 / (4200 x 3) = 0.051 l/s
The effect factor ϵ will then be 1.045 (see diagram 3) and the new effect p_w = 637 x 1.045 = 666 W.

The cooling effect is calculated to be 666 W.

Example 2

Heating
What is the heating effect of a 2.4 m Polaris S with 20 l/s and pressure of 100 Pa?
The room's winter temperature is assumed to be t_r = 21° C
The hot water temperature in/out of Polaris S is 56/46° C

Answer
Temperature difference $\Delta t_{rw} = t_r - (t_{wi} + t_{wo})/2$
Δt_{rw} = 21 - (56+46) / 2 = 30 K
Active length L_{act} = 2.4 m - 0.3 m = 2.1 m
20 l/s / 2.1 m = 9.5 l/(s m)

Read off from diagram 2: P_{Lt} = 33.7 W/(m K).
Heating effect p_w = 33.7 × 30 K × 2.1m = 2123 W

Use the calculated heating effect to calculate the water flow $q_w = p_w / (c_{pw} \times \Delta t_w)$

Δt_{rw} = temperature difference in the water circuit in/out [K]
q_w = 2123 / (4200 x 10) = 0.051 l/s

The effect factor will then be 0.8375 (see diagram 3) and the new effect p_w = 2123 x 0.8375 = 1778 W

With the new heating effect, a new water flow is calculated q_w = 1778 / (4200 x10) = 0.042 l/s

Read off the effect factor (the value is 0.815), to calculate the effect p_w = 2123 x 0.815 = 1730W

With the new heating effect, a new water flow is calculated q_w = 1730 / (4200 x10) = 0.041 l/s

Read off the effect factor (the value is 0.812), to calculate the effect p_w = 2123 x 0.812 = 1724W

With the new heating effect, a new water flow is calculated q_w = 1724 / (4200 x10) = 0.041 l/s

The effect factor will then be 0.812 and the heating effect 1724W.

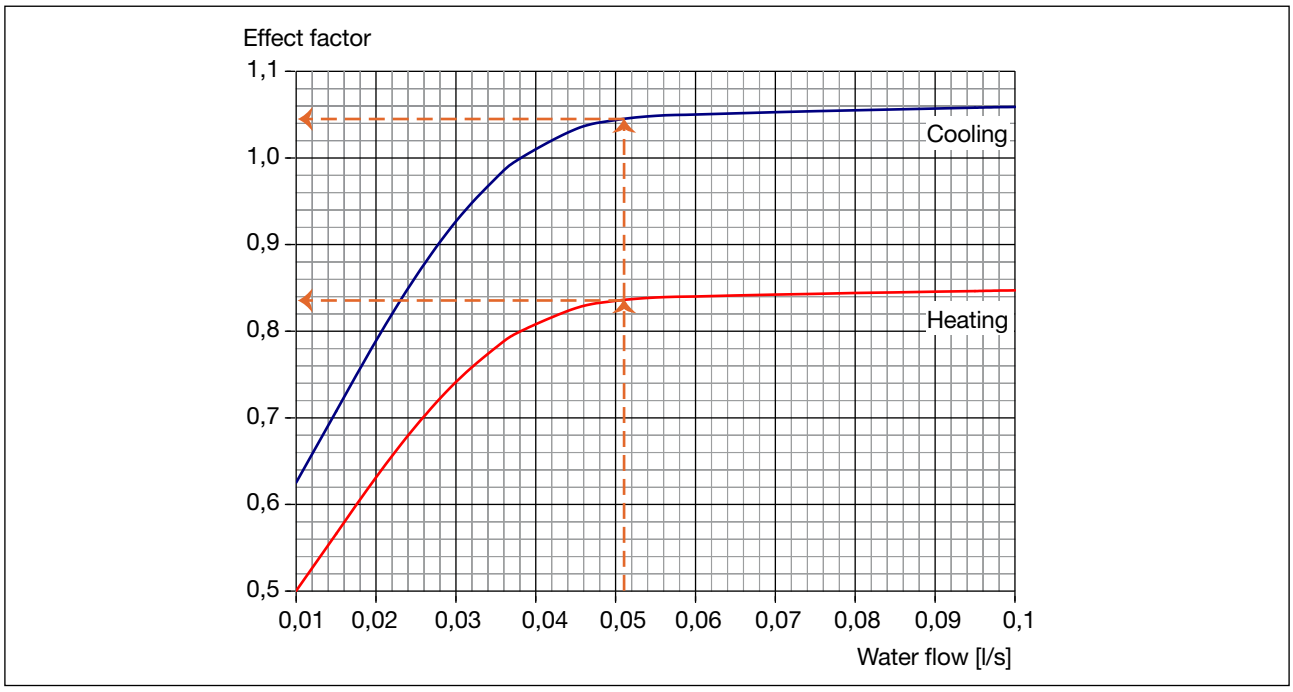

Diagram 3. Effect factor as a function of water flow.

We reserve the right to make changes

Supply air beam

Polaris S

Cooling effect, Polaris S

Drypac™, condensation protection

All Polaris S models can be ordered with the Drypac™ plus feature, condensation protection consisting of perlite (volcanic stone) that is applied to the fin surfaces. Drypac™ has properties that enable it to work with a supply temperature that is 4° C below the dew point, for continuous operation, and 5 to 8° C below the dew point for limited periods. Drypac™ provides both an increased effect and increased security against condensation drips. At a working temperature above the dew point, the output is reduced by 17% but when the working temperature is below the dew point, there is no reduction in output. This means that the effect is highest when the need is greatest.

For more information about Drypac™, refer to the chapter Drypac™.

Effect data

All table values are presented with flow-adjusted effects based on the Δt for Water out-in given in the table.

Lindab's supply air beams are Eurovent-certified and tested according to EN-15116, EN-14518.

Noise

The table below presents both the sound pressure level with 10 m² Sabine equivalent sound absorption area dB(A) and the sound output level.

Nozzle pressure 60 Pa			Water															Air		
q_A (m³/h)	q_A (l/s)	Polaris S	Δt_{rw} = 7 K			Δt_{rw} = 8 K			Δt_{rw} = 9 K			Δt_{rw} = 10 K			Δt_{rw} = 11 K			Total pressure, duct	Noise pressure	Noise power
			P(W)	q(l/s)	p(kPa)	P(W)	q(l/s)	p(kPa)	P(W)	q(l/s)	p(kPa)	P(W)	q(l/s)	p(kPa)	P(W)	q(l/s)	p(kPa)	Pa	dB(A)	dB(A)
36	10	1,2	129	0,010	0,1	156	0,012	0,1	186	0,015	0,2	219	0,017	0,2	256	0,020	0,2	63	<20	<24
		1,8	205	0,016	0,3	254	0,020	0,4	309	0,025	0,6	367	0,029	0,7	425	0,034	0,9			
		2,4	0	0,000	0,0	0	0,000	0,0	0	0,000	0,0	0	0,000	0,0	0	0,000	0,0			
54	15	1,2	154	0,012	0,1	188	0,015	0,2	226	0,018	0,2	269	0,021	0,3	315	0,025	0,3	65	21	25
		1,8	265	0,021	0,4	331	0,026	0,6	399	0,032	0,8	464	0,037	1,1	526	0,042	1,3			
		2,4	372	0,030	1,0	453	0,036	1,5	529	0,042	1,9	598	0,048	2,3	663	0,053	2,8			
		3,0	464	0,037	1,9	551	0,044	2,6	630	0,050	3,3	701	0,056	4,0	773	0,062	4,7			
72	20	1,8	312	0,025	0,6	387	0,031	0,8	460	0,037	1,1	528	0,042	1,3	590	0,047	1,6	68	24	28
		2,4	**440**	**0,035**	**1,4**	**526**	**0,042**	**1,9**	**603**	**0,048**	**2,4**	**675**	**0,054**	**2,9**	**743**	**0,059**	**3,4**			
		3,0	539	0,043	2,5	626	0,050	3,3	708	0,056	4,0	788	0,063	4,9	869	0,069	5,8			
		3,6	618	0,049	3,9	710	0,057	5,0	801	0,064	6,1	891	0,071	7,4	982	0,078	8,9			
90	25	1,8	347	0,028	0,7	426	0,034	0,9	501	0,040	1,2	570	0,045	1,5	635	0,051	1,8	72	26	30
		2,4	491	0,039	1,7	578	0,046	2,2	658	0,052	2,8	732	0,058	3,3	806	0,064	4,0			
		3,0	596	0,047	3,0	687	0,055	3,8	774	0,062	4,7	862	0,069	5,7	949	0,076	6,8			
		3,6	679	0,054	4,6	778	0,062	5,8	877	0,070	7,2	976	0,078	8,8	1075	0,086	10,5			
108	30	1,8	372	0,030	0,7	454	0,036	1,0	530	0,042	1,4	599	0,048	1,7	664	0,053	2,0	77	27	31
		2,4	529	0,042	1,9	616	0,049	2,5	698	0,056	3,1	776	0,062	3,7	855	0,068	4,4			
		3,0	642	0,051	3,4	735	0,059	4,3	829	0,066	5,3	922	0,073	6,5	1016	0,081	7,7			
		3,6	730	0,058	5,2	836	0,067	6,6	942	0,075	8,2	1049	0,084	10,0	1156	0,092	12,0			
126	35	2,4	557	0,044	2,1	646	0,051	2,7	729	0,058	3,3	811	0,065	4,0	893	0,071	4,8	82	28	32
		3,0	677	0,054	3,7	775	0,062	4,7	873	0,070	5,9	972	0,077	7,1	1071	0,085	8,5			
		3,6	774	0,062	5,8	886	0,071	7,4	999	0,080	9,2	1112	0,089	11,2	1225	0,098	13,3			
144	40	2,4	578	0,046	2,2	668	0,053	2,8	753	0,060	3,5	839	0,067	4,2	924	0,074	5,1	88	30	34
		3,0	705	0,056	4,0	808	0,064	5,1	910	0,072	6,3	1013	0,081	7,7	1116	0,089	9,2			
		3,6	811	0,065	6,3	929	0,074	8,0	1047	0,083	10,0	1166	0,093	12,2	1284	0,102	14,6			

Table 2. Flow-adjusted effect table. Cooling circuit Δt = 3° C (Water in-out).
For the red values, the flow is below the recommended minimum flow of 0.035 l/s at Δt = 3° C. Increase the flow to the recommended minimum flow.

Supply air beam Polaris S

Cooling effect, Polaris S

Nozzle pressure 80 Pa			Water															Air		
q_A (m³/h)	q_A (l/s)	Polaris S	Δt_{rw} = 7 K			Δt_{rw} = 8 K			Δt_{rw} = 9 K			Δt_{rw} = 10 K			Δt_{rw} = 11 K			Total pressure, duct	Noise pressure	Noise power
			P(W)	q(l/s)	p(kPa)	P(W)	q(l/s)	p(kPa)	P(W)	q(l/s)	p(kPa)	P(W)	q(l/s)	p(kPa)	P(W)	q(l/s)	p(kPa)	Pa	dB(A)	dB(A)
36	10	1,2	137	0,011	0,1	166	0,013	0,1	199	0,016	0,2	235	0,019	0,2	275	0,022	0,3	83	<20	<24
		1,8	224	0,018	0,3	279	0,022	0,5	339	0,027	0,6	400	0,032	0,8	460	0,037	1,1			
54	15	1,2	162	0,013	0,1	199	0,016	0,2	241	0,019	0,2	286	0,023	0,3	335	0,027	0,4	85	22	26
		1,8	286	0,023	0,5	356	0,028	0,7	427	0,034	0,9	494	0,039	1,2	556	0,044	1,5			
		2,4	404	0,032	1,2	488	0,039	1,6	564	0,045	2,1	636	0,051	2,6	700	0,056	3,1			
		3,0	0	0,000	0,0	0	0,000	0,0	0	0,000	0,0	0	0,000	0,0	0	0,000	0,0			
72	20	1,2	180	0,014	0,1	222	0,018	0,2	269	0,021	0,3	320	0,026	0,4	373	0,030	0,5	88	25	29
		1,8	334	0,027	0,6	412	0,033	0,9	486	0,039	1,2	555	0,044	1,5	617	0,049	1,8			
		2 4	470	0 037	1 5	556	0 044	2 1	636	0 051	2 6	707	0 056	3 1	779	0 062	3 7			
		3,0	573	0,046	2,8	663	0,053	3,6	748	0,060	4,4	832	0,066	5,4	917	0,073	6,4			
		3,6	658	0,052	4,3	754	0,060	5,5	850	0,068	6,8	946	0,075	8,3	1042	0,083	9,9			
90	25	1,8	369	0,029	0,7	450	0,036	1,0	526	0,042	1,3	595	0,047	1,7	660	0,053	2,0	92	27	31
		2,4	519	0,041	1,8	606	0,048	2,4	686	0,055	3,0	764	0,061	3,6	842	0,067	4,3			
		3,0	627	0,050	3,3	721	0,057	4,2	812	0,065	5,2	904	0,072	6,3	996	0,079	7,5			
		3,6	716	0,057	5,0	820	0,065	6,4	925	0,074	8,0	1029	0,082	9,7	1134	0,090	11,6			
108	30	1,8	394	0,031	0,8	478	0,038	1,1	554	0,044	1,5	623	0,050	1,8	689	0,055	2,1	97	28	32
		2,4	554	0,044	2,0	644	0,051	2,7	726	0,058	3,3	808	0,064	4,0	890	0,071	4,7			
		3,0	671	0,053	3,7	768	0,061	4,7	866	0,069	5,8	964	0,077	7,0	1062	0,085	8,4			
		3,6	766	0,061	5,7	878	0,070	7,2	989	0,079	9,0	1101	0,088	11,0	1213	0,097	13,1			
126	35	1,8	416	0,033	0,9	501	0,040	1,2	577	0,046	1,6	649	0,052	1,9	715	0,057	2,3	102	29	33
		2,4	581	0,046	2,2	672	0,053	2,9	757	0,060	3,5	843	0,067	4,3	928	0,074	5,1			
		3,0	705	0,056	4,0	808	0,064	5,1	911	0,073	6,3	1013	0,081	7,7	1117	0,089	9,2			
		3,6	810	0,064	6,3	927	0,074	8,0	1045	0,083	10,0	1163	0,093	12,1	1282	0,102	14,5			
144	40	2,4	603	0,048	2,4	694	0,055	3,0	782	0,062	3,7	871	0,069	4,5	959	0,076	5,4	108	31	35
		3,0	734	0,058	4,3	840	0,067	5,5	947	0,075	6,8	1054	0,084	8,3	1161	0,092	9,9			
		3,6	847	0,067	6,8	970	0,077	8,7	1093	0,087	10,8	1217	0,097	13,2	1340	0,107	15,8			

Table 3. Flow-adjusted effect table. Cooling circuit Δt = 3° C (Water in-out).
For the red values, the flow is below the recommended minimum flow of 0.035 l/s at Δt = 3° C. Increase the flow to the recommended minimum flow.

Nozzle pressure 100 Pa			Water															Air		
q_A (m³/h)	q_A (l/s)	Polaris S	Δt_{rw} = 7 K			Δt_{rw} = 8 K			Δt_{rw} = 9 K			Δt_{rw} = 10 K			Δt_{rw} = 11 K			Total pressure, duct	Noise pressure	Noise power
			P(W)	q(l/s)	p(kPa)	P(W)	q(l/s)	p(kPa)	P(W)	q(l/s)	p(kPa)	P(W)	q(l/s)	p(kPa)	P(W)	q(l/s)	p(kPa)	Pa	dB(A)	dB(A)
36	10	1,2	145	0,012	0,1	177	0,014	0,1	212	0,017	0,2	252	0,020	0,2	295	0,023	0,3	103	<20	<24
		1,8	245	0,020	0,4	306	0,024	0,5	371	0,030	0,7	435	0,035	1,0	496	0,039	1,2			
54	15	1,2	171	0,014	0,1	210	0,017	0,2	254	0,020	0,2	303	0,024	0,3	354	0,028	0,4	105	22	26
		1,8	308	0,025	0,6	382	0,030	0,8	455	0,036	1,0	522	0,042	1,3	585	0,047	1,6			
		2,4	437	0,035	1,4	523	0,042	1,9	600	0,048	2,3	671	0,053	2,9	740	0,059	3,4			
72	20	1,2	188	0,015	0,2	232	0,019	0,2	282	0,022	0,3	336	0,027	0,4	391	0,031	0,5	108	26	30
		1,8	355	0,028	0,7	435	0,035	1,0	510	0,041	1,3	579	0,046	1,6	644	0,051	1,9			
		2,4	499	0,040	1,7	586	0,047	2,3	666	0,053	2,8	741	0,059	3,4	816	0,065	4,0			
		3,0	608	0,048	3,1	700	0,056	4,0	789	0,063	4,9	878	0,070	5,9	967	0,077	7,1			
		3,6	0	0,000	0,0	0	0,000	0,0	0	0,000	0,0	0	0,000	0,0	0	0,000	0,0			
90	25	1,8	388	0,031	0,8	471	0,038	1,1	547	0,044	1,4	617	0,049	1,8	682	0,054	2,1	112	28	32
		2,4	544	0,043	2,0	634	0,051	2,6	715	0,057	3,2	796	0,063	3,9	877	0,070	4,6			
		3,0	659	0,053	3,6	755	0,060	4,5	851	0,068	5,6	948	0,075	6,8	1044	0,083	8,1			
		3,6	755	0,060	5,5	865	0,069	7,1	975	0,078	8,8	1085	0,086	10,7	1195	0,095	12,7			
108	30	1,8	413	0,033	0,9	497	0,040	1,2	574	0,046	1,6	645	0,051	1,9	711	0,057	2,3	117	29	33
		2,4	578	0,046	2,2	668	0,053	2,8	753	0,060	3,5	838	0,067	4,2	924	0,074	5,1			
		3,0	700	0,056	4,0	802	0,064	5,0	903	0,072	6,2	1006	0,080	7,6	1108	0,088	9,1			
		3,6	804	0,064	6,2	921	0,073	7,9	1038	0,083	9,8	1155	0,092	12,0	1272	0,101	14,3			
126	35	1,8	434	0,035	1,0	520	0,041	1,3	596	0,047	1,7	668	0,053	2,0	736	0,059	2,4	122	30	34
		2,4	603	0,048	2,4	695	0,055	3,0	783	0,062	3,8	872	0,069	4,6	960	0,076	5,4			
		3,0	733	0,058	4,3	840	0,067	5,5	946	0,075	6,8	1053	0,084	8,3	1160	0,092	9,9			
		3,6	846	0,067	6,8	969	0,077	8,7	1092	0,087	10,8	1215	0,097	13,1	1339	0,107	15,7			
144	40	1,8	457	0,036	1,1	543	0,043	1,4	621	0,049	1,8	693	0,055	2,2	764	0,061	2,6	128	32	36
		2,4	623	0,050	2,5	716	0,057	3,2	807	0,064	4,0	899	0,072	4,8	990	0,079	5,7			
		3,0	760	0,061	4,6	871	0,069	5,8	982	0,078	7,3	1093	0,087	8,8	1204	0,096	10,6			
		3,6	881	0,070	7,3	1009	0,080	9,3	1138	0,091	11,6	1266	0,101	14,2	1395	0,111	17,0			

Table 4. Flow-adjusted effect table. Cooling circuit Δt = 3° C (Water in-out).
For the red values, the flow is below the recommended minimum flow of 0.035 l/s at Δt = 3° C. Increase the flow to the recommended minimum flow.

We reserve the right to make changes

Supply air beam Polaris S

Heating effect, Polaris S

Nozzle pressure 60 Pa			Water															Air		
q_A (m³/h)	q_A (l/s)	Polaris S	Δt_{rw} = 20 K			Δt_{rw} = 25 K			Δt_{rw} = 30 K			Δt_{rw} = 35 K			Δt_{rw} = 40 K			Total pres-sure, duct	Noise pres-sure	Noise power
			P(W)	q(l/s)	p(kPa)	P(W)	q(l/s)	p(kPa)	P(W)	q(l/s)	p(kPa)	P(W)	q(l/s)	p(kPa)	P(W)	q(l/s)	p(kPa)	Pa	dB(A)	dB(A)
36	10	1,2	266	0,006	0,0	350	0,008	0,0	446	0,011	0,0	557	0,013	0,1	684	0,016	0,1	63	<20	<24
		1,8	395	0,009	0,1	539	0,013	0,1	714	0,017	0,1	920	0,022	0,2	1147	0,027	0,3			
		2,4	0	0,000	0,0	0	0,000	0,0	0	0,000	0,0	0	0,000	0,0	0	0,000	0,0			
54	15	1,2	309	0,007	0,0	413	0,010	0,0	533	0,013	0,1	675	0,016	0,1	838	0,020	0,1	65	21	25
		1,8	491	0,012	0,1	687	0,016	0,1	926	0,022	0,2	1193	0,029	0,3	1462	0,035	0,4			
		2,4	669	0,016	0,2	963	0,023	0,3	1294	0,031	0,5	1616	0,039	0,7	1904	0,045	0,9			
		3,0	854	0,020	0,3	1232	0,029	0,6	1608	0,038	0,9	1942	0,046	1,3	2243	0,054	1,6			
72	20	1,8	567	0,014	0,1	807	0,019	0,2	1091	0,026	0,3	1390	0,033	0,4	1673	0,040	0,5	68	24	28
		2,4	802	0,019	0,2	1159	0,028	0,4	1526	0,036	0,6	1858	0,044	0,9	2157	0,052	1,2			
		3,0	1034	0,025	0,4	1466	0,035	0,8	1857	0,044	1,2	2201	0,053	1,6	2521	0,060	2,0			
		3,6	1256	0,030	0,7	1722	0,041	1,3	2127	0,051	1,8	2488	0,059	2,4	2849	0,068	3,0			
90	25	1,8	625	0,015	0,1	897	0,021	0,2	1210	0,029	0,3	1524	0,036	0,5	1811	0,043	0,6	72	26	30
		2,4	915	0,022	0,3	1315	0,031	0,5	1698	0,041	0,8	2034	0,049	1,1	2340	0,056	1,4			
		3,0	1192	0,028	0,6	1651	0,039	1,0	2048	0,049	1,4	2405	0,057	1,8	2755	0,066	2,3			
		3,6	1437	0,034	0,9	1916	0,046	1,5	2329	0,056	2,1	2724	0,065	2,8	3120	0,075	3,6			
108	30	1,8	670	0,016	0,1	965	0,023	0,2	1297	0,031	0,4	1618	0,039	0,5	1907	0,046	0,7	77	27	31
		2,4	1008	0,024	0,3	1434	0,034	0,6	1824	0,044	0,9	2168	0,052	1,2	2483	0,059	1,5			
		3,0	1323	0,032	0,7	1796	0,043	1,1	2201	0,053	1,6	2575	0,062	2,1	2949	0,070	2,6			
		3,6	1588	0,038	1,1	2073	0,050	1,7	2504	0,060	2,4	2929	0,070	3,2	3355	0,080	4,1			
126	35	2,4	1082	0,026	0,4	1524	0,036	0,6	1917	0,046	1,0	2264	0,054	1,3	2593	0,062	1,6	82	28	32
		3,0	1430	0,034	0,7	1908	0,046	1,2	2321	0,055	1,7	2714	0,065	2,3	3109	0,074	2,9			
		3,6	1711	0,041	1,2	2205	0,053	1,9	2654	0,063	2,7	3105	0,074	3,5	3556	0,085	4,5			
144	40	2,4	1142	0,027	0,4	1594	0,038	0,7	1989	0,048	1,0	2341	0,056	1,4	2682	0,064	1,7	88	30	34
		3,0	1515	0,036	0,8	1997	0,048	1,3	2419	0,058	1,8	2829	0,068	2,4	3240	0,077	3,1			
		3,6	1812	0,043	1,4	2312	0,055	2,1	2783	0,066	2,9	3255	0,078	3,9	3728	0,089	4,9			

Table 5. Flow-adjusted effect table. Heating circuit Δt = 10° C (Water in-out).
For the red values, the flow is below the recommended minimum flow of 0.035 l/s at Δt = 10° C. Increase the flow to the recommended minimum flow.

Nozzle pressure 80 Pa			Water															Air		
q_A (m³/h)	q_A (l/s)	Polaris S	Δt_{rw} = 20 K			Δt_{rw} = 25 K			Δt_{rw} = 30 K			Δt_{rw} = 35 K			Δt_{rw} = 40 K			Total pres-sure, duct	Noise pres-sure	Noise power
			P(W)	q(l/s)	p(kPa)	P(W)	q(l/s)	p(kPa)	P(W)	q(l/s)	p(kPa)	P(W)	q(l/s)	p(kPa)	P(W)	q(l/s)	p(kPa)	Pa	dB(A)	dB(A)
36	10	1,2	280	0,007	0,0	371	0,009	0,0	475	0,011	0,0	595	0,014	0,1	734	0,018	0,1	83	<20	<24
		1,8	425	0,010	0,1	586	0,014	0,1	782	0,019	0,2	1009	0,024	0,2	1253	0,030	0,3			
54	15	1,2	324	0,008	0,0	435	0,010	0,0	564	0,013	0,1	717	0,017	0,1	892	0,021	0,1	85	22	26
		1,8	524	0,013	0,1	740	0,018	0,1	999	0,024	0,2	1282	0,031	0,3	1559	0,037	0,5			
		2,4	729	0,017	0,2	1053	0,025	0,4	1404	0,034	0,6	1732	0,041	0,8	2023	0,048	1,0			
		3,0	0	0,000	0,0	0	0,000	0,0	0	0,000	0,0	0	0,000	0,0	0	0,000	0,0			
72	20	1,2	353	0,008	0,0	477	0,011	0,0	625	0,015	0,1	800	0,019	0,1	998	0,024	0,1	88	25	29
		1,8	603	0,014	0,1	862	0,021	0,2	1165	0,028	0,3	1474	0,035	0,4	1760	0,042	0,6			
		2 4	866	0 021	0 3	1248	0 030	0 5	1626	0 039	0 7	1960	0 047	1 0	2262	0 054	1 3			
		3,0	1128	0,027	0,5	1578	0,038	0,9	1972	0,047	1,3	2323	0,056	1,7	2661	0,064	2,2			
		3,6	1374	0,033	0,9	1849	0,044	1,4	2257	0,054	2,0	2640	0,063	2,6	3024	0,072	3,4			
90	25	1,8	663	0,016	0,1	955	0,023	0,2	1284	0,031	0,3	1605	0,038	0,5	1893	0,045	0,7	92	27	31
		2,4	982	0,023	0,3	1401	0,033	0,6	1789	0,043	0,8	2133	0,051	1,2	2443	0,058	1,5			
		3,0	1284	0,031	0,6	1753	0,042	1,1	2158	0,052	1,5	2524	0,060	2,0	2891	0,069	2,5			
		3,6	1548	0,037	1,0	2031	0,049	1,7	2457	0,059	2,3	2873	0,069	3,1	3291	0,079	3,9			
108	30	1,8	710	0,017	0,1	1026	0,025	0,2	1371	0,033	0,4	1697	0,041	0,6	1988	0,047	0,7	97	28	32
		2,4	1076	0,026	0,4	1517	0,036	0,6	1910	0,046	1,0	2256	0,054	1,3	2584	0,062	1,6			
		3,0	1413	0,034	0,7	1890	0,045	1,2	2301	0,055	1,7	2692	0,064	2,2	3083	0,074	2,9			
		3,6	1691	0,040	1,2	2184	0,052	1,9	2629	0,063	2,6	3075	0,073	3,5	3522	0,084	4,5			
126	35	1,8	753	0,018	0,1	1088	0,026	0,3	1445	0,035	0,4	1775	0,042	0,6	2066	0,049	0,8	102	29	33
		2,4	1151	0,027	0,4	1605	0,038	0,7	2000	0,048	1,0	2353	0,056	1,4	2695	0,064	1,7			
		3,0	1516	0,036	0,8	1998	0,048	1,3	2419	0,058	1,8	2830	0,068	2,4	3241	0,077	3,1			
		3,6	1807	0,043	1,4	2307	0,055	2,1	2777	0,066	2,9	3248	0,078	3,8	3721	0,089	4,9			
144	40	2,4	1212	0,029	0,4	1673	0,040	0,8	2071	0,049	1,1	2431	0,058	1,5	2784	0,067	1,8	108	31	35
		3,0	1598	0,038	0,9	2084	0,050	1,4	2517	0,060	2,0	2943	0,070	2,6	3371	0,081	3,4			
		3,6	1903	0,045	1,5	2413	0,058	2,3	2904	0,069	3,1	3397	0,081	4,2	3891	0,093	5,4			

Table 6. Flow-adjusted effect table. Heating circuit Δt = 10° C (Water in-out).
For the red values, the flow is below the recommended minimum flow of 0.035 l/s at Δt = 10° C. Increase the flow to the recommended minimum flow.

Supply air beam Polaris S

Heating effect, Polaris S

Nozzle pressure 100 Pa			Water															Air		
q_A (m³/h)	q_A (l/s)	Polaris S	Δt_{rw} = 20 K			Δt_{rw} = 25 K			Δt_{rw} = 30 K			Δt_{rw} = 35 K			Δt_{rw} = 40 K			Total pres-sure, duct	Noise pres-sure	Noise power
			P(W)	q(l/s)	p(kPa)	P(W)	q(l/s)	p(kPa)	P(W)	q(l/s)	p(kPa)	P(W)	q(l/s)	p(kPa)	P(W)	q(l/s)	p(kPa)	Pa	dB(A)	dB(A)
36	10	1,2	295	0,007	0,0	391	0,009	0,0	504	0,012	0,0	634	0,015	0,1	785	0,019	0,1	103	<20	<24
		1,8	460	0,011	0,1	639	0,015	0,1	857	0,020	0,2	1107	0,026	0,3	1366	0,033	0,4			
54	15	1,2	338	0,008	0,0	455	0,011	0,0	593	0,014	0,1	756	0,018	0,1	943	0,023	0,1	105	22	26
		1,8	560	0,013	0,1	795	0,019	0,2	1075	0,026	0,3	1372	0,033	0,4	1653	0,039	0,5			
		2,4	796	0,019	0,2	1150	0,027	0,4	1517	0,036	0,6	1848	0,044	0,9	2147	0,051	1,2			
72	20	1,2	367	0,009	0,0	498	0,012	0,0	654	0,016	0,1	839	0,020	0,1	1048	0,025	0,1	108	26	30
		1,8	639	0,015	0,1	918	0,022	0,2	1237	0,030	0,3	1553	0,037	0,5	1841	0,044	0,6			
		2,4	934	0,022	0,3	1339	0,032	0,5	1724	0,041	0,8	2061	0,049	1,1	2370	0,057	1,4			
		3,0	1227	0,029	0,6	1691	0,040	1,0	2089	0,050	1,4	2451	0,059	1,9	2807	0,067	2,4			
		3,6	0	0,000	0,0	0	0,000	0,0	0	0,000	0,0	0	0,000	0,0	0	0,000	0,0			
90	25	1,8	699	0,017	0,1	1009	0,024	0,2	1351	0,032	0,4	1676	0,040	0,5	1965	0,047	0,7	112	28	32
		2,4	1049	0,025	0,3	1484	0,035	0,6	1876	0,045	0,9	2221	0,053	1,2	2544	0,061	1,6			
		3,0	1378	0,033	0,7	1854	0,044	1,2	2262	0,054	1,6	2646	0,063	2,2	3031	0,072	2,8			
		3,6	1659	0,040	1,2	2152	0,051	1,8	2590	0,062	2,6	3029	0,072	3,4	3470	0,083	4,3			
108	30	1,8	746	0,018	0,1	1079	0,026	0,3	1434	0,034	0,4	1763	0,042	0,6	2055	0,049	0,8	117	29	33
		2,4	1141	0,027	0,4	1593	0,038	0,7	1988	0,047	1,0	2340	0,056	1,4	2681	0,064	1,7			
		3,0	1500	0,036	0,8	1981	0,047	1,3	2400	0,057	1,8	2808	0,067	2,4	3216	0,077	3,1			
		3,6	1792	0,043	1,3	2291	0,055	2,1	2757	0,066	2,9	3225	0,077	3,8	3693	0,088	4,9			
126	35	1,8	789	0,019	0,2	1141	0,027	0,3	1506	0,036	0,5	1838	0,044	0,6	2137	0,051	0,8	122	30	34
		2,4	1214	0,029	0,4	1676	0,040	0,8	2073	0,050	1,1	2434	0,058	1,5	2787	0,067	1,9			
		3,0	1597	0,038	0,9	2082	0,050	1,4	2514	0,060	2,0	2941	0,070	2,6	3368	0,080	3,4			
		3,6	1900	0,045	1,5	2410	0,058	2,2	2901	0,069	3,1	3392	0,081	4,2	3886	0,093	5,3			
144	40	1,8	838	0,020	0,2	1210	0,029	0,3	1584	0,038	0,5	1917	0,046	0,7	2217	0,053	0,9	128	32	36
		2,4	1272	0,030	0,5	1740	0,042	0,8	2145	0,051	1,2	2509	0,060	1,5	2874	0,069	2,0			
		3,0	1674	0,040	1,0	2167	0,052	1,5	2608	0,062	2,1	3051	0,073	2,8	3494	0,083	3,6			
		3,6	1989	0,048	1,6	2512	0,060	2,4	3023	0,072	3,4	3536	0,084	4,5	4050	0,097	5,8			

Table 7 . Flow-adjusted effect table. Heating circuit Δt = 10° C (Water in-out).
For the red values, the flow is below the recommended minimum flow of 0.035 l/s at Δt = 10° C. Increase the flow to the recommended minimum flow.

Sound data

Internal sound dampening ΔL

Hz	63	125	250	500	1000	2000	4000	8000
dB	22	19	8	6	9	11	15	18

Tabell 8. Polaris S 30, 2,4 m, Ø100 mm, 60 Pa 25 l/s, internal sound dampening.

We reserve the right to make changes

Supply air beam

Polaris S

Couplings & connections

Polaris S Supplied in lengths from 1.2 m to 3.6 m in steps of 0.1 m. The connection dimension for the water is o.d. 15 mm or 22 mm, and 125 mm (single) and 100 mm (double) for the air.

Polaris S is available with a large number of coupling options. This is how to find the designation for the coupling option you require for Polaris S.

NB! Connections C and D have a higher noise value than indicated in the quick selection charts, please check with Lindab.

Step 1.
Indicate the position for the ventilation connection.

Step 2.
Indicate the position for the pipe connection.

Step 3.
Indicate the direction of air injection: L or R.

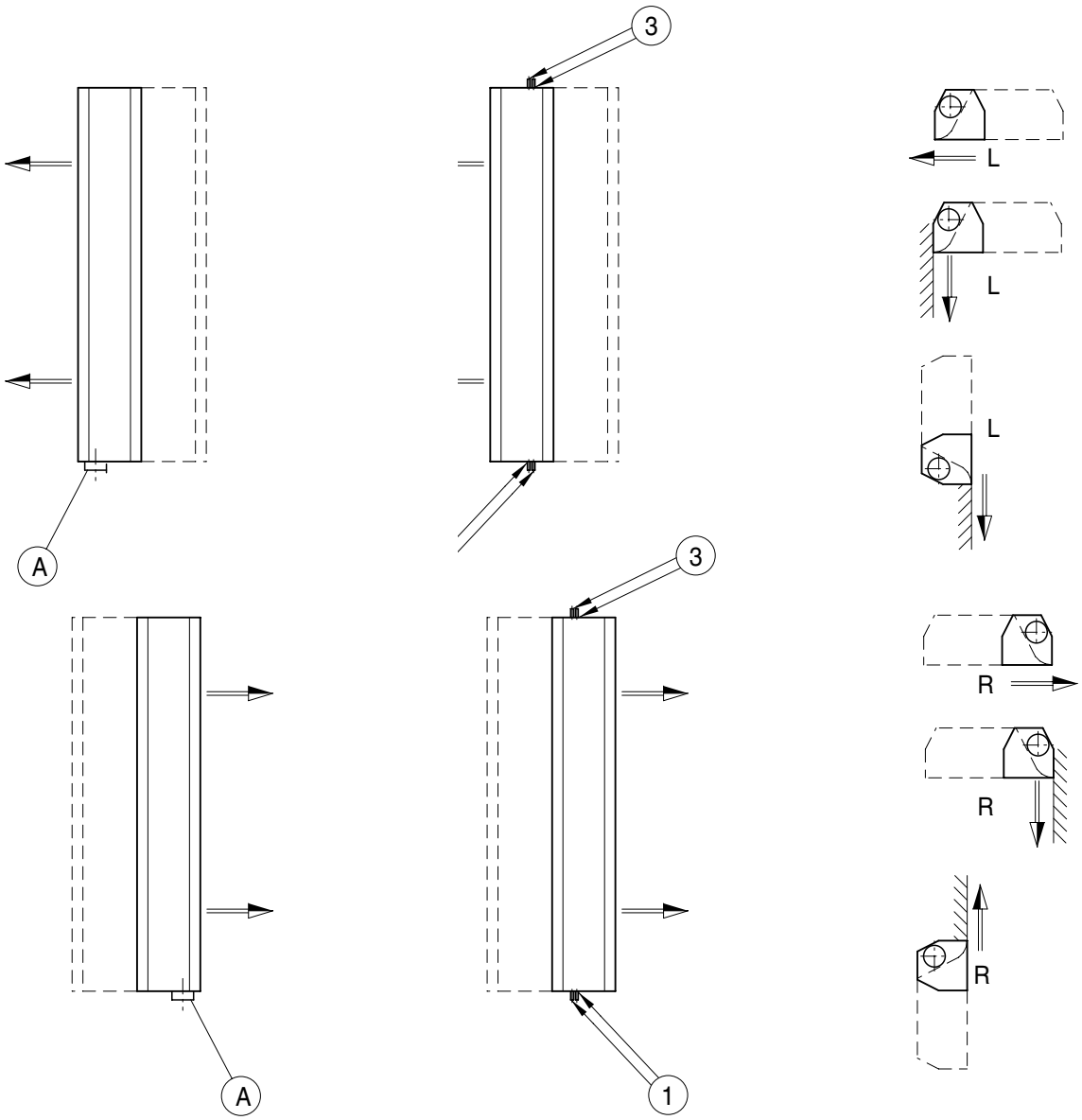

Figure 1. Coupling and connection options.

Supply air beam Polaris S

Couplings & connections

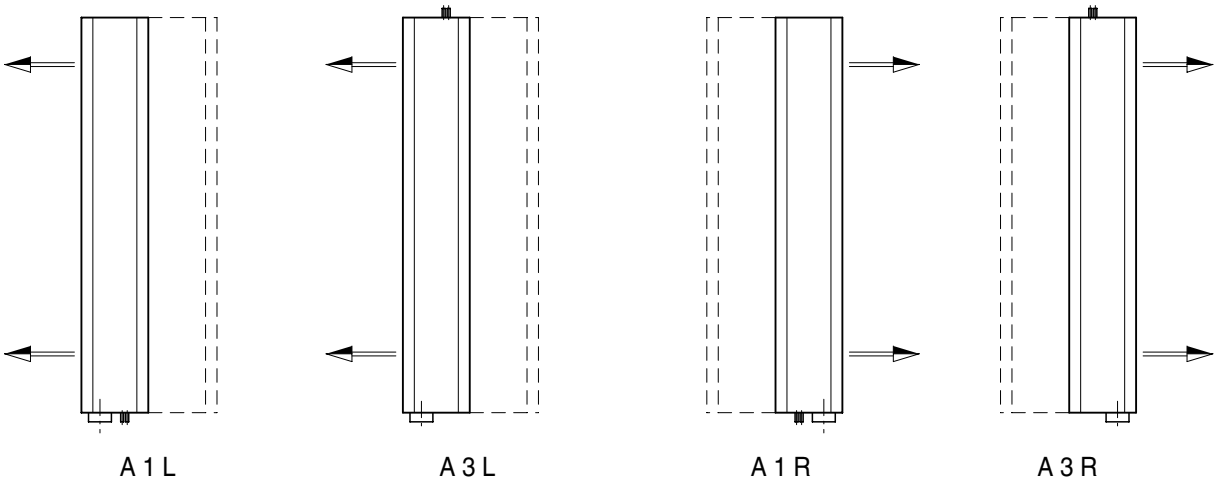

Figure 2. Examples of common coupling options. Type A1L therefore has air connection in the end piece, pipe in the same end piece and the air injection direction is L.

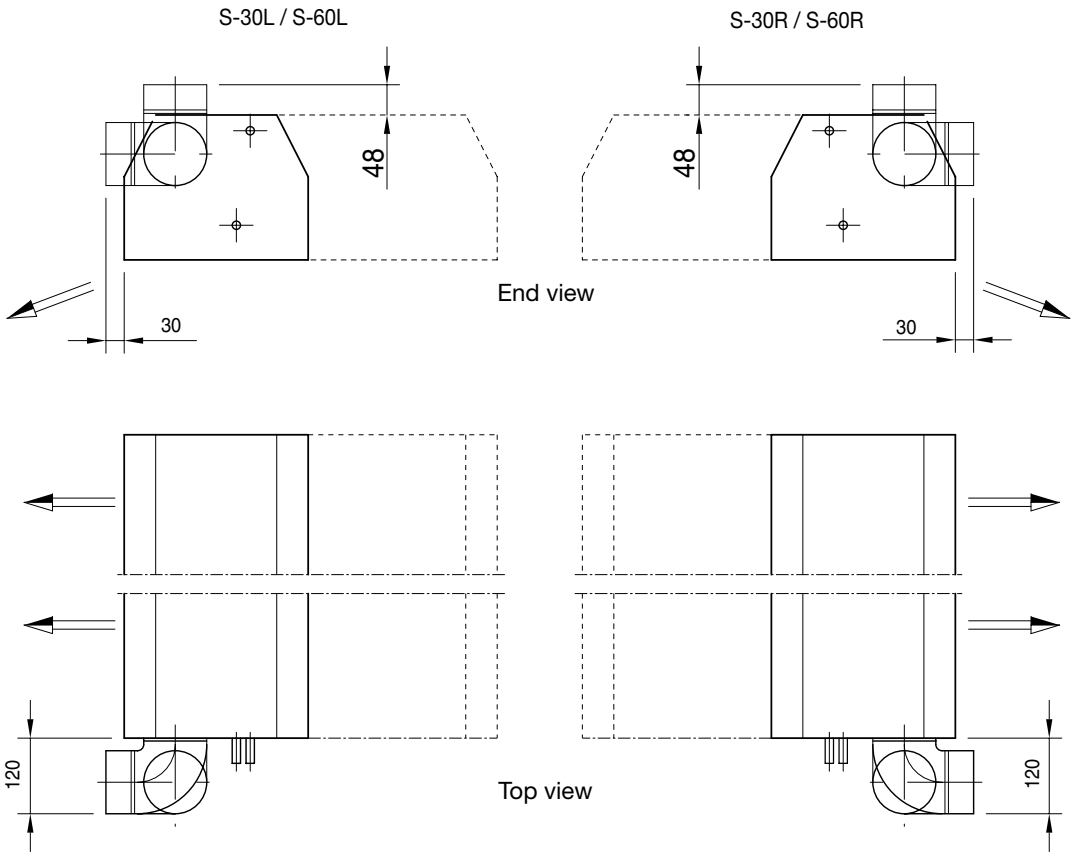

Figure 3. Examples of common coupling options. Type A1L therefore has air connection in the end piece, pipe in the same end piece and the air injection direction is L.

We reserve the right to make changes

Supply air beam Polaris S

Width & height, mm

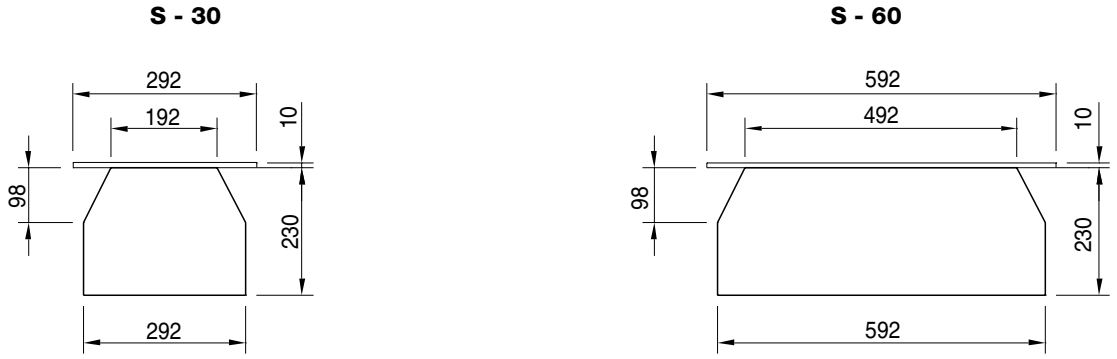

Length, m

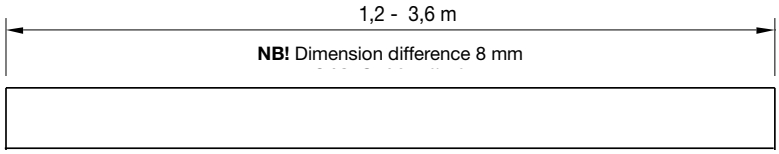

Dimensions, mm

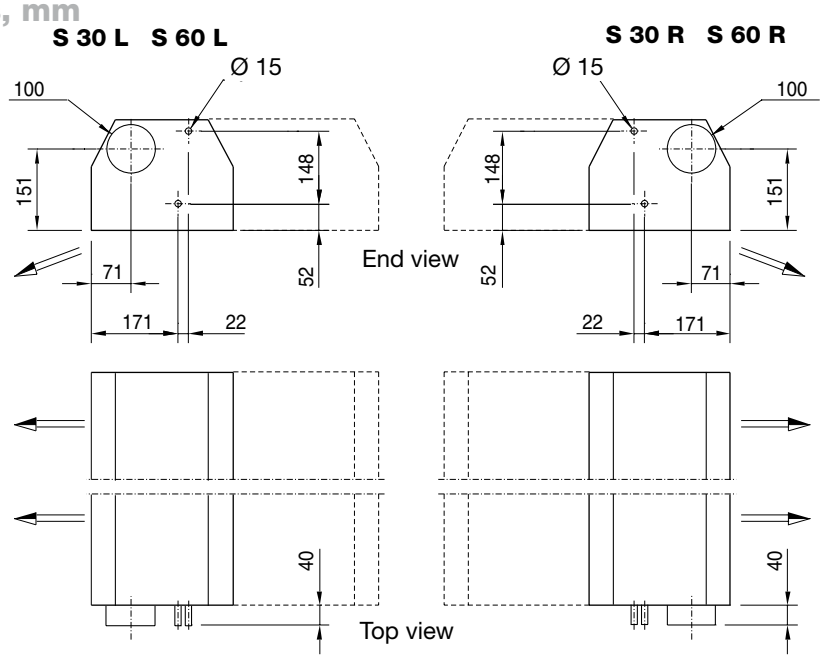

Figure 4. Polaris S - 30 and S - 60, dimensions.

Weight and water volume

	Polaris S 30	Polaris S 60
Weight, kg/m	12	13
Water content, l/m	0.65	0.65
Copper pipes, connection Ø, mm	Cooling: 15 Heating: 15	Cooling: 15 Heating: 15
Copper pipes, battery	12	12
Copper pipes, quality	SS/EN 12449	SS/EN 12449
Pressure class	PN10	PN10

Table 9. Polaris S 60, weight and water volume.

Supply air beam

Polaris S

Installation examples

Polaris S is installed recessed in a suspended ceiling. The product can also be built into a wall, which may then require specially adapted components for the installation

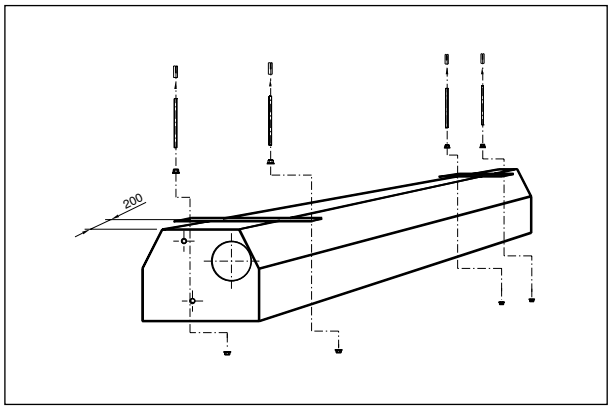

Figure 5. Polaris S-30 installation principle.

Note. Beams longer than 2.6 m, come with a suspension bracket in the middle.

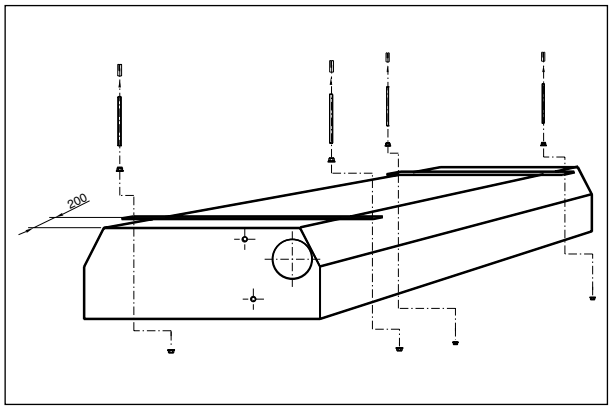

Figure 6. Polaris S-60 installation principle.

Note. Beams longer than 2.6 m, come with a suspension bracket in the middle.

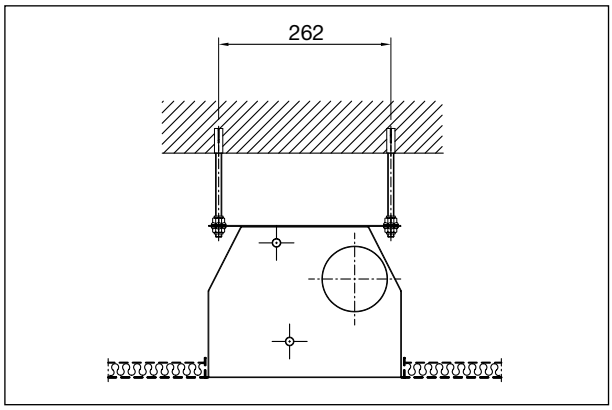

Figure 7. Polaris S-30 recessed mounted in a suspended ceiling.

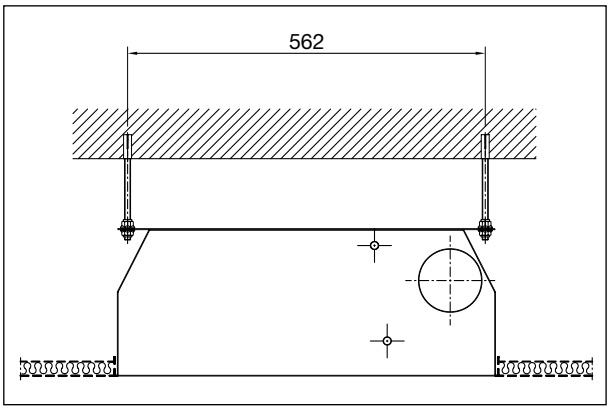

Figure 8. Polaris S-60 recessed mounted in a suspended ceiling.

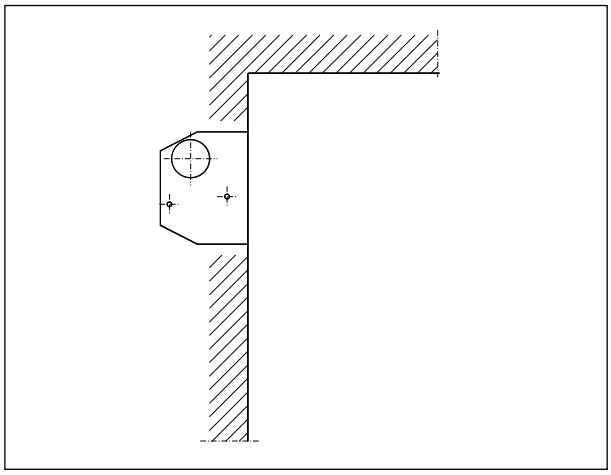

Figure 9. Principle for the wall installation of Polaris S-30.

We reserve the right to make changes

Supply air beam Polaris S

Distribution diagrams & throw lengths, Polaris S

Polaris S and other induction beams utilise the pressure of the supply air to cause the room air to circulate through the cooling battery. This enables a high cooling effect, but also creates significant air movements, which often result in long throw lengths. Polaris S is therefore supplied as standard with a diverging (30°) air distribution, which significantly reduces throw lengths and air velocities compared to conventional linear nozzle technology.

Depending on the room conditions, Polaris S is also available with a long or a medium distribution profile. Figure 8 shows an example of how the nozzle angle affects the throw length and air velocity.

NB! With a short distribution profile, the distribution pattern for the air becomes wider than the length of the beam. The beams should therefore be placed at a distance of at least 1.8 m from one another.

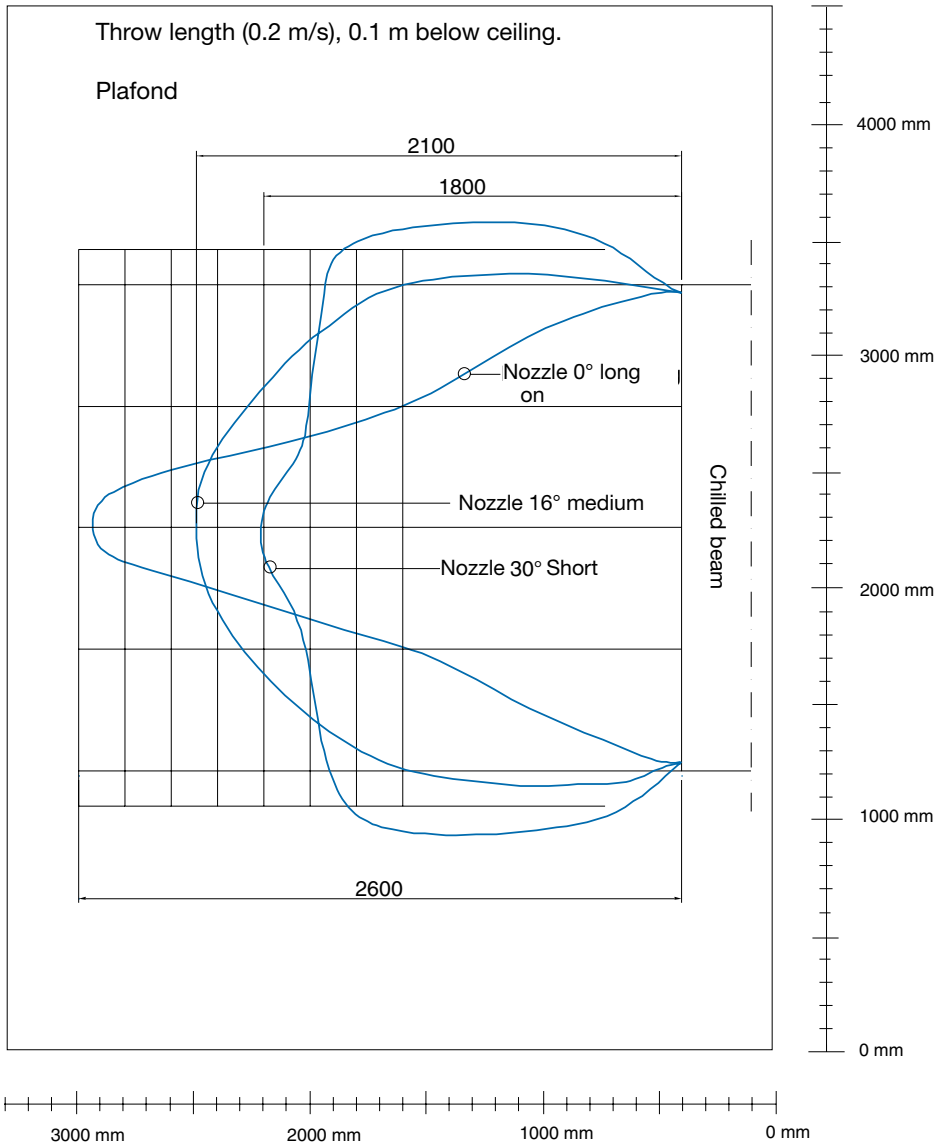

Figure 10. Polaris S distribution profile short 30°, medium 16° and long 0°.

Supply air beam

Polaris S

1
2
3
4
5
6
7
8
9
10
11
12
13
14
15
16
17
18
19

Long distribution profile

Height to the beam's lower edge: 2600 mm.
Airflow: 11 l/s per active metre.
Air duct pressure: 60 Pa.
ΔT room – mean water temperature: 9° C.
ΔT room – supply air temperature: 5° C.

Air velocities with long distribution profile (nozzle angle 0°).

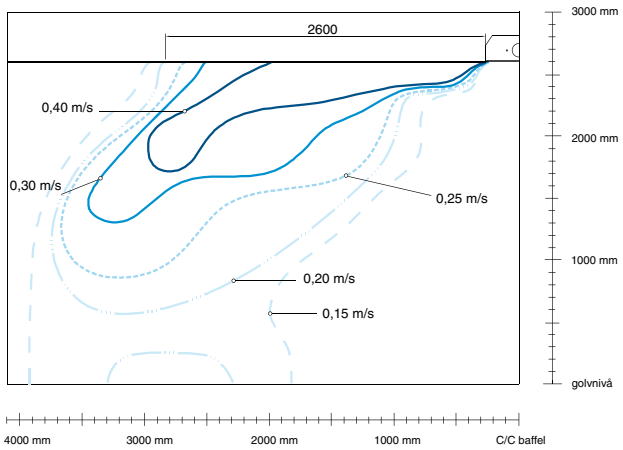

Medium distribution profile

Height to the beam's lower edge: 2600 mm.
Airflow: 11 l/s per active metre.
Air duct pressure: 60 Pa.
ΔT room – mean water temperature: 9° C.
ΔT room – supply air temperature: 5° C.

Air velocities with medium distribution profile (nozzle angle 16°).

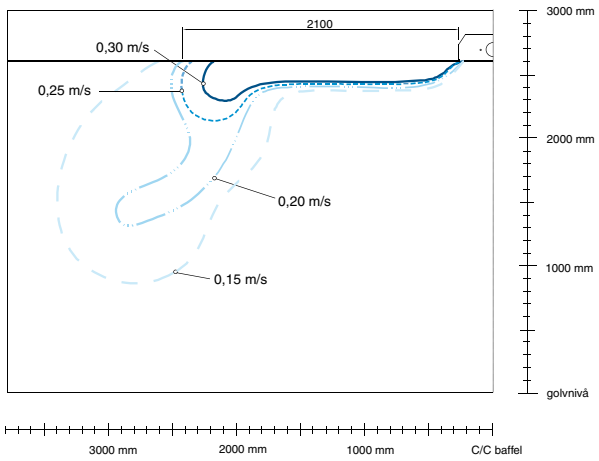

Standard distribution profile

Height to the beam's lower edge: 2600 mm.
Airflow: 11 l/s per active metre.
Air duct pressure: 60 Pa.
ΔT room – mean water temperature: 9° C.
ΔT room – supply air temperature: 5° C.

Air velocities with standard distribution profile (nozzle angle 30°).

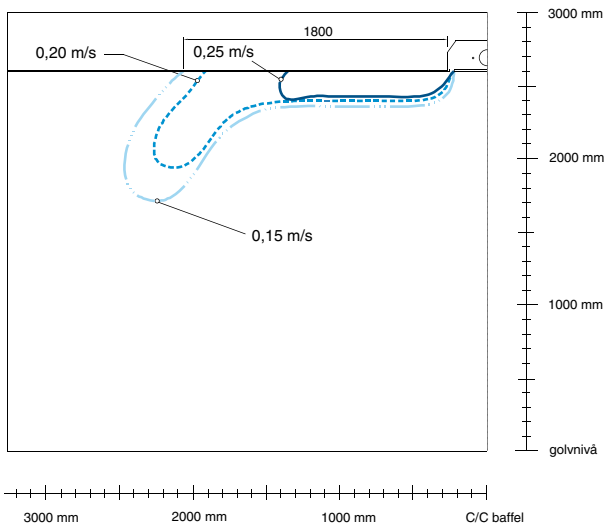

Figure 11-13. Polaris S distribution profiles, standard (30°), medium (16°) and long (0°) at an airflow of 22 l/s per active metre and pressure of 60 Pa in the air duct.

We reserve the right to make changes

Supply air beam Polaris S

Distribution diagrams, Polaris S

The measurements were conducted with cooled supply air (Δt room air – supply air) of 5° C and cooling in the water circuit (Δt – room air – mean water temperature) of 8° C. All heat supplied through the walls.

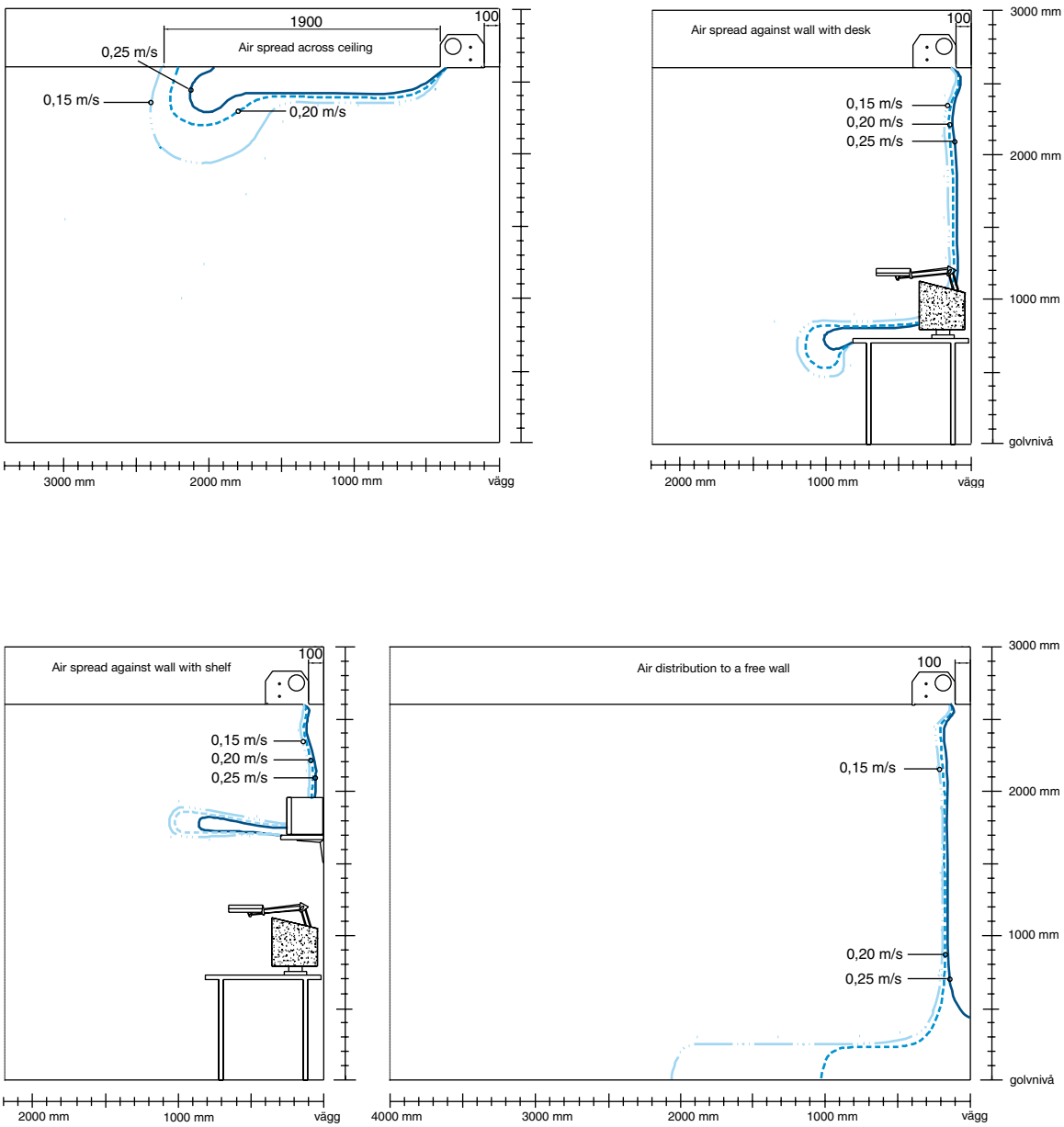

Figure 14 - 17. Air velocities below a supply air beam at an airflow of 8 l/s per active metre, standard distribution profile (nozzles at a 30° angle).

Supply air beam

Polaris S

1
2
3
4
5
6
7
8
9
10
11
12
13
14
15
16
17
18
19

Distribution diagrams, Polaris S

The measurements were conducted with cooled supply air (Δt room air – supply air) of 5° C and cooling in the water circuit (Δt – room air – mean water temperature) of 8° C. All heat supplied through the walls.

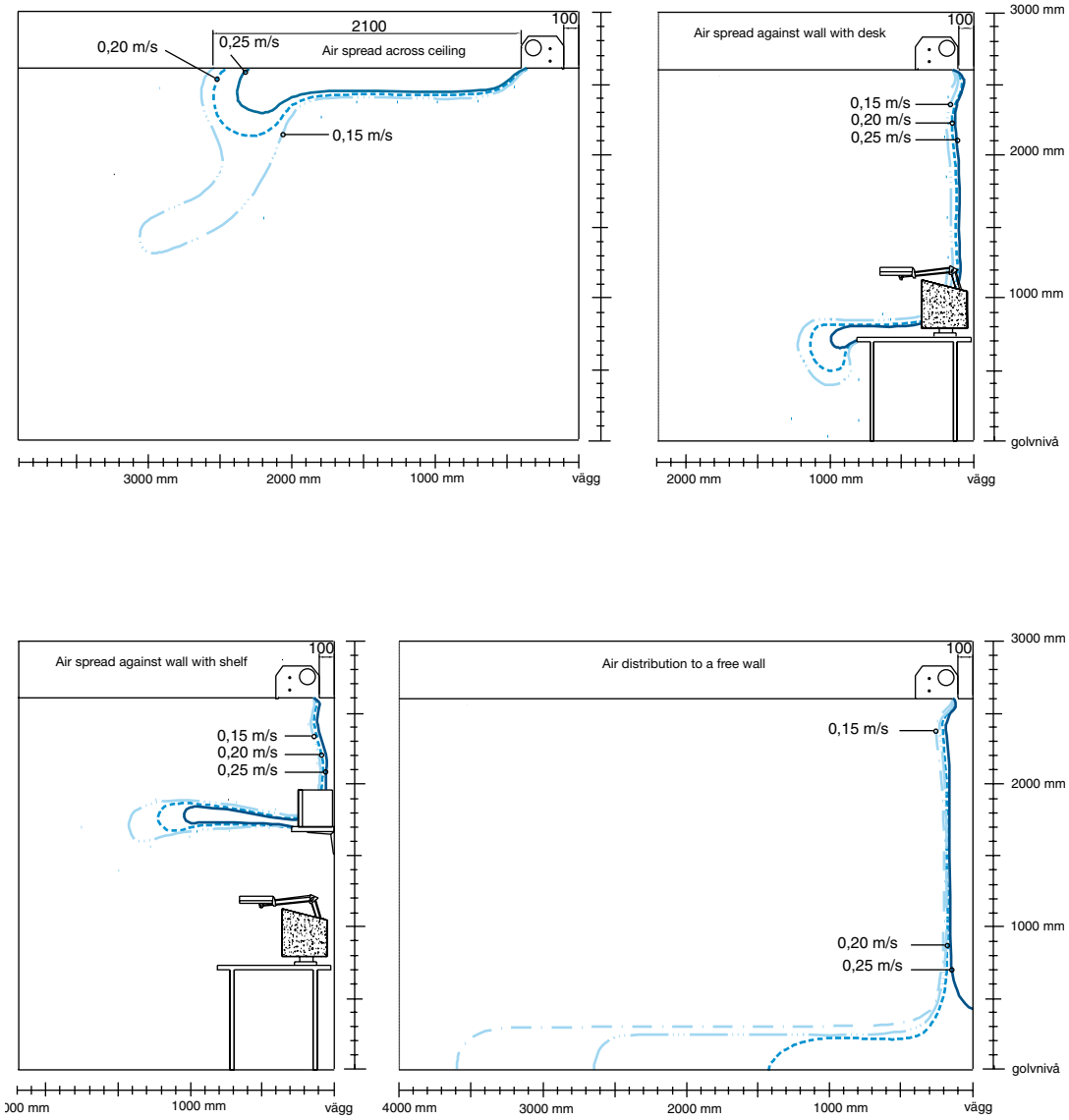

Figure 18-21. Air velocities below a supply air beam at airflow of 11 l/s per active metre, standard distribution profile (nozzles at a 30° angle).

We reserve the right to make changes

Supply air beam

Polaris S

Distribution diagrams, Polaris S

The measurements were conducted with cooled supply air (Δt room air – supply air) of 5° C and cooling in the water circuit Δt – room air – mean water temperature) of 8° C. All heat supplied through the walls.

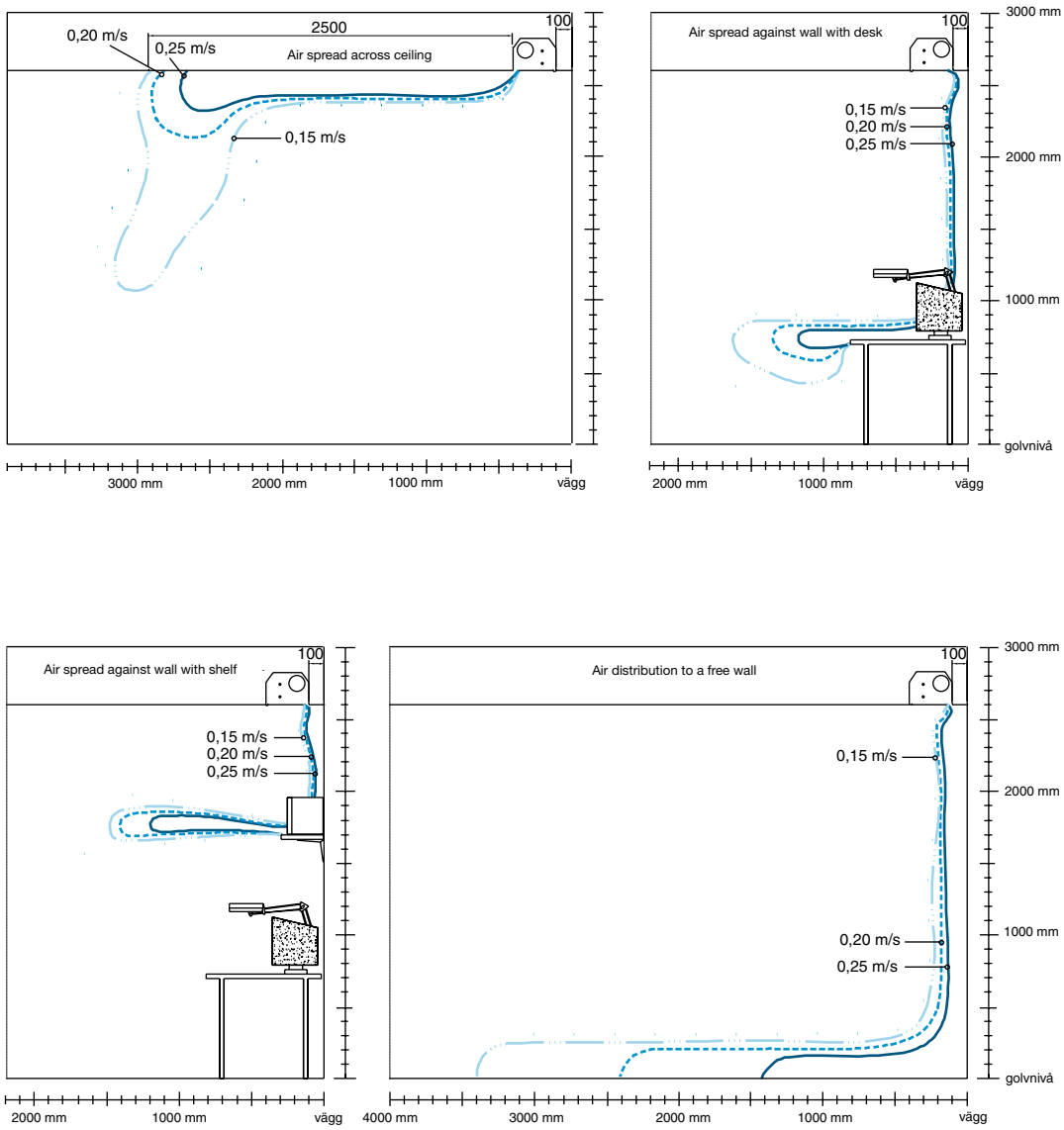

Figure 22-25. Air velocities below a supply air beam at an airflow of 14l/s per active metre, standard distribution profile (nozzles at a 30° angle).

Supply air beam Polaris S

1
2
3
4
5
6
7
8
9
10
11
12
13
14
15
16
17
18
19

Distribution diagrams, Polaris S

The measurements were conducted with cooled supply air (Δt room air – supply air) of 5° C and cooling in the water circuit Δt – room air – mean water temperature) of 8° C. All heat supplied through the walls.

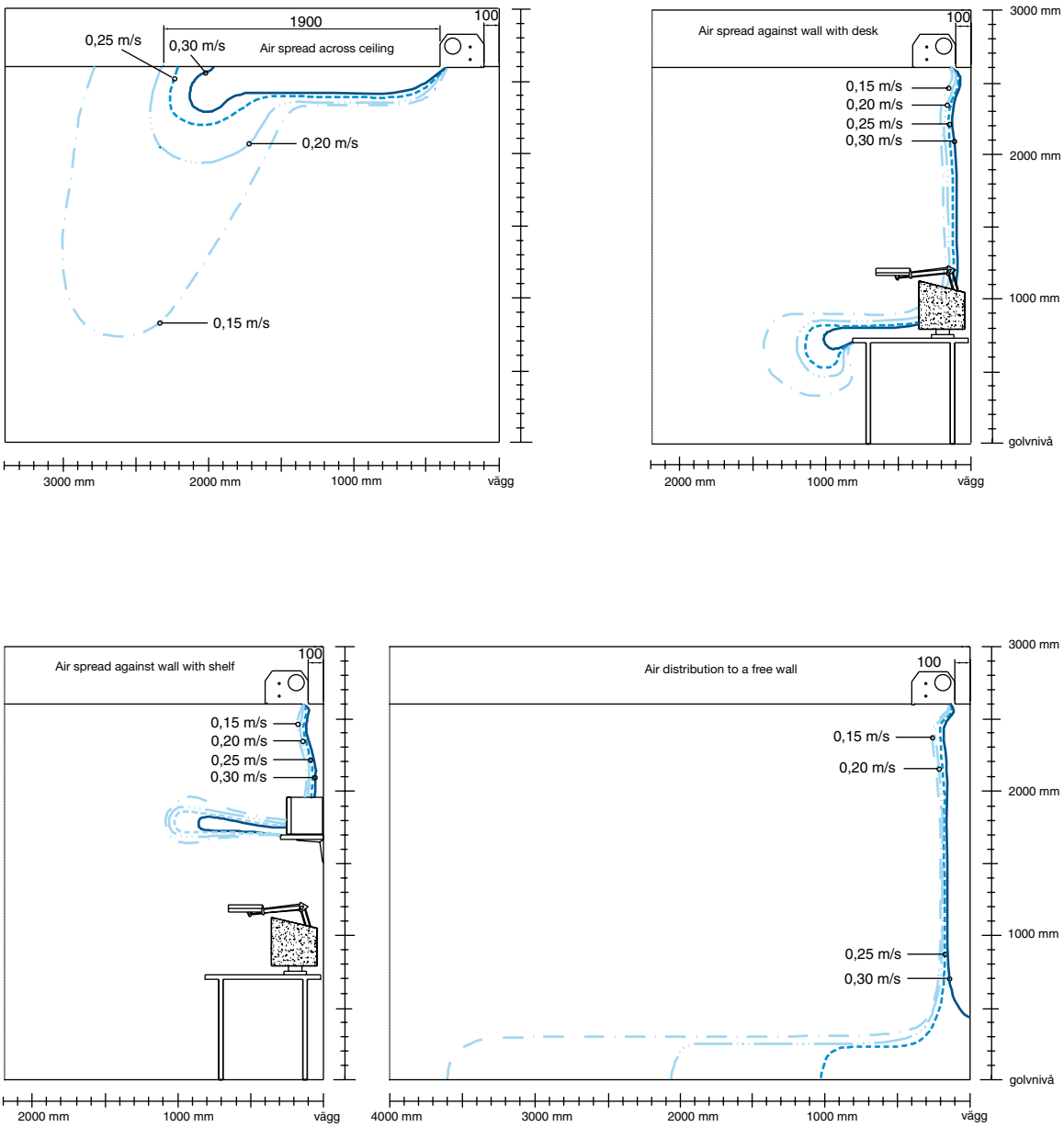

Figure 26-29. Air velocities below a supply air beam at an airflow of 8 l/s per active metre, standard distribution profile (nozzles at a 16° angle).

We reserve the right to make changes

Supply air beam

Polaris S

Distribution diagrams, Polaris S

The measurements were conducted with cooled supply air (Δt room air – supply air) of 5° C and cooling in the water circuit Δt – room air – mean water temperature) of 8° C. All heat supplied through the walls.

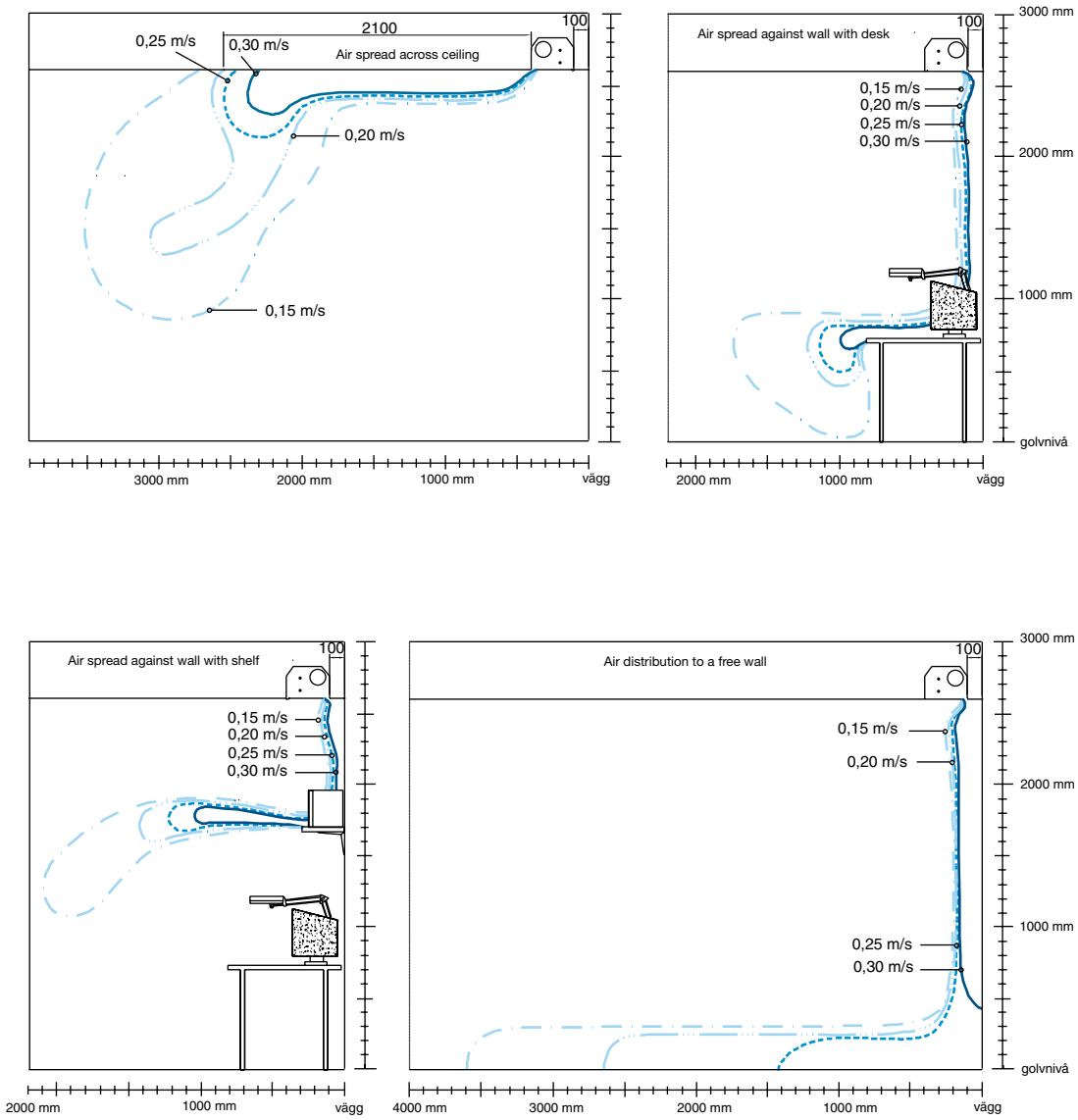

Figure 30-33. Air velocities below a supply air beam at an airflow of 11 l/s per active metre, standard distribution profile (nozzles at a 16° angle).

Supply air beam Polaris S

1
2
3
4
5
6
7
8
9
10
11
12
13
14
15
16
17
18
19

Distribution diagrams, Polaris S

The measurements were conducted with cooled supply air (Δt room air – supply air) of 5° C and cooling in the water circuit Δt – room air – mean water temperature) of 8° C. All heat supplied through the walls.

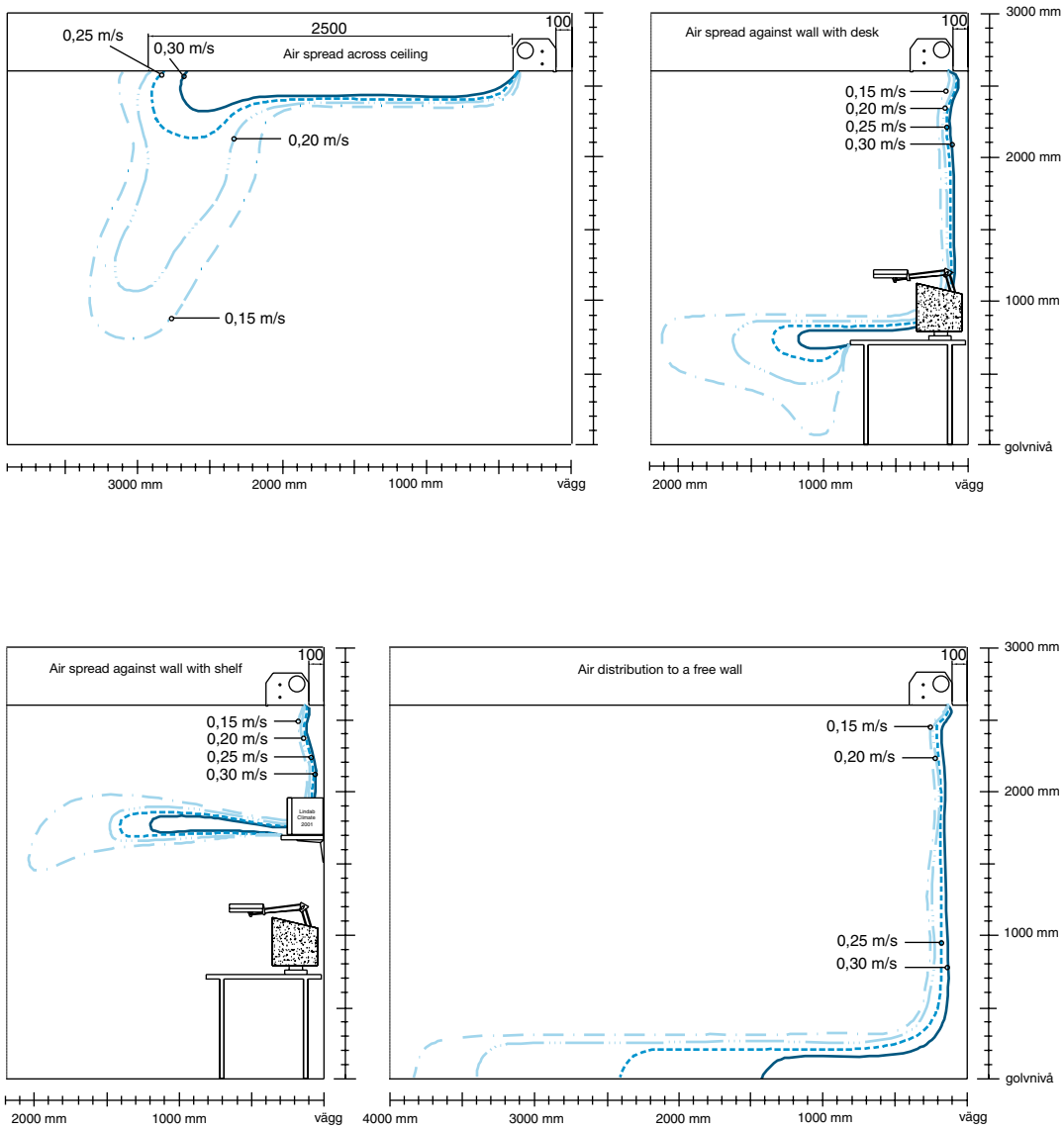

Figure 34-37. Air velocities below a supply air beam where the airflow is 14 l/s per active metre standard distribution profile (nozzles at a 16° angle).

We reserve the right to make changes

Supply air beam Polaris S

Pressure drop in water circuit, cooling

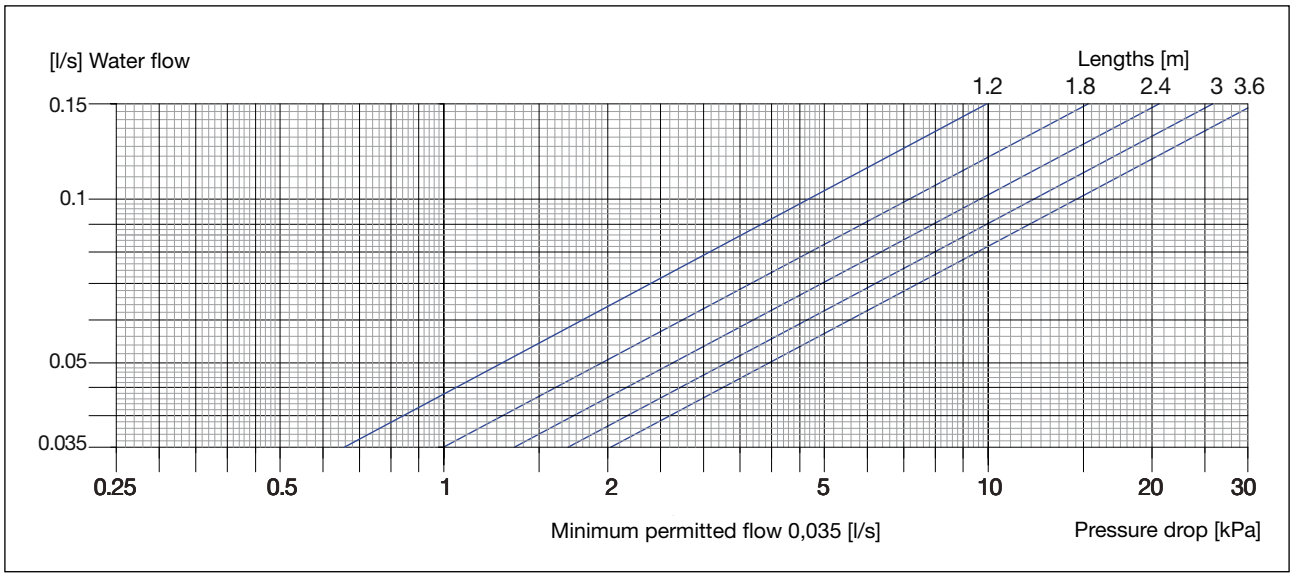

Diagram 5. Pressure drop in water circuit, cooling Ø 15.

$q_w = P / (C_p \times \Delta t)$

q_w = *water flow [l/s]*
P = effect [W]
C_p = *specific heat capacity [J/(kg·K)]*
Δt = *temperature difference in the water circuit in/out [K]*

Example:

Polaris S 2.4 m, which gives a cooling effect of 666 W
$\Delta t = 3$ *K*
$q_w = 666 / (4200 \times 3) = 0.053$ *l/s*
The pressure drop in the water circuit in diagram 4 is read off as 2.8 kPa.

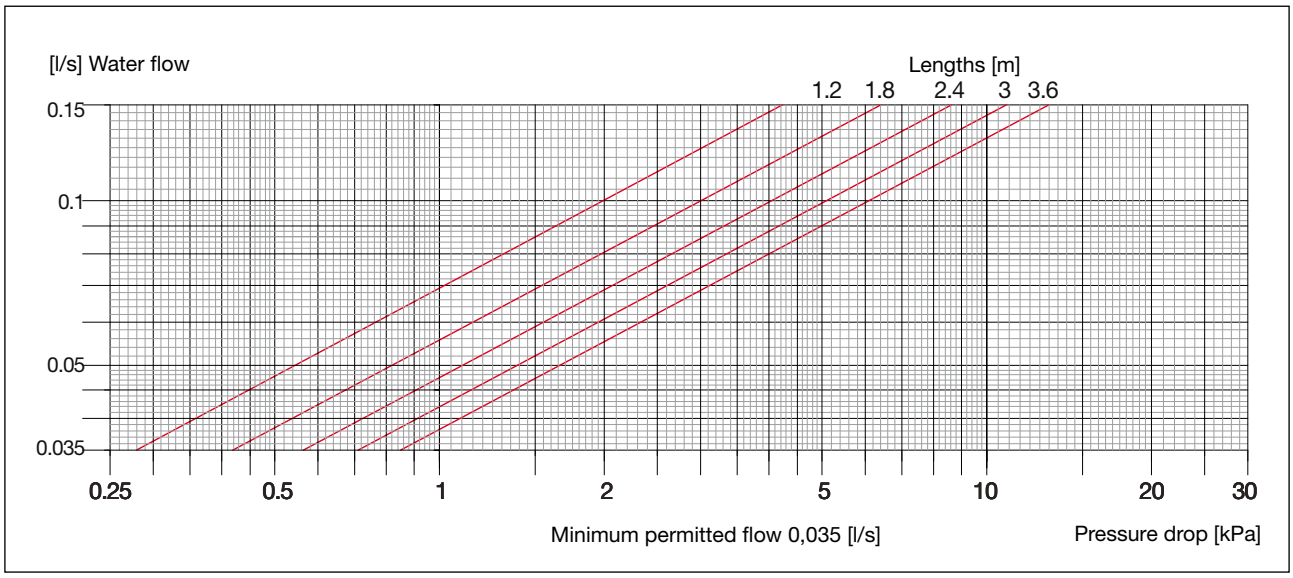

Diagram 6. Pressure drop in water circuit, heating Ø 15.

$q_w = P / (C_p \times \Delta t)$

q_w = *water flow [l/s]*
P = effect [W]
C_p = *specific heat capacity [J/(kg·K)]*
Δt = *temperature difference in the water circuit in/out [K]*

Example:

Polaris S 2.4 m, which gives a heating effect of 1724 W
$\Delta t = 10$ *K*
$q_w = 1724 / (4200 \times 10) = 0.041$ *l/s*
The pressure drop in the water circuit in diagram 6 is read off as 0.75 kPa.

Supply air beam Polaris S

1
2
3
4
5
6
7
8
9
10
11
12
13
14
15
16
17
18
19

Control

Lindab offers control equipment that is very simple to use. To avoid heating and cooling being active at the same time, the systems are controlled sequentially (Regula Combi). It is also possible to control only the heating or the cooling (Regula Mono). For the technical data, refer to the chapter Regula.

Colour

Polaris S is powder-coated as standard in white, RAL 9010, gloss value 30. Other colours may be ordered specially.

Designations

Product/Version:	Polaris S
Width, [cm]:	30 or 60
Connection diam. water, [mm]:	15
Connection diam. air, [mm]:	100
Coupling options:	Air: A Water: 1 or 3 Direction of air injection: L or R
Length, [m]:	Length in metres
Air quantity, [l/s]:	Must always be specified
Nozzle pressure, [Pa]:	Must always be specified
Distribution profile:	Standard (30°) Medium (16°) Long (0°)
Plus features:	See page 231

Programme text

Supply air beams from Lindab	**Qty**
Product:	
Polaris S-60-15-100-A1L-2.4 m	30
Air quantity:	25 l/s
Nozzle pressure:	60 Pa
Distribution profile:	Medium (16°)
Plus features:	
Drypac:	
Regula Secura:	
Control valve, cooling:	
Actuator, cooling:	
Accessories:	
Regula Combi:	30
Product:	
Polaris S-30-15-100-A1L-3.0 m	20
Air quantity:	40 l/s
Nozzle pressure:	80 Pa
Distribution profile:	Short (30°)
Plus features:	
Drypac:	
Heating:	
Regula Secura:	
Control valve, cooling:	
Actuator, cooling:	
Control valve, heating:	
Actuator, heating:	
Air vent:	
Accessories:	
Regula Combi:	20

We reserve the right to make changes

Supply air beam

Plafond

Contact, Overview, Index	1
Guideline heating and cooling	2
Plexus	3
Professor	4
Pilot	5
Architect	6
Polaris I & S	7
Plafond	**8**
Podium	9
Celo	10
Cabinett	11
Capella	12
Carat	13
Fasadium	14
Atrium H & C /Loggia	15
Regula	16
Drypac™	17
Lighting	18
TEKNOsim	19

© 03.2011 Lindab Ventilation A/S. All forms of reproduction without written permission are forbidden. Lindab® is the registered trademark of Lindab AB.
Lindab's products, systems, product and product group designations are protected by intellectual property rights (IPR).

Supply air beam Plafond

Picture 1. Plafond is suitable when the ceiling should be free from equipment.

Use

Offices, hotels, hospitals, schools, banks, etc.

Installation

Visible installation in corners between a wall and a ceiling, or on a wall.

Worth noting

Especially suitable when the ceiling should be free from equipment (see picture 1). The supply air is directed along the ceiling or wall. Available with Drypac™ condensation protection or Regula Secura condensation guard. Lindab's supply air beams are Eurovent-certified and tested according to EN-15116 and EN-14518.

Key figures

Length:	1.2 – 3.6 m
Size:	Plafond B has the format 320 × 301 mm. Plafond C has the format 240 × 230 mm. Plafond D has the format 357 × 301 mm.
Capacity:	Cooling effect of up to 1330 W Air quantity of up to 40 l/s

Supply air beam Plafond

Function

Plafond's function is based on the induction principle. Ventilation air with a certain dynamic pressure is released through specially-formed nozzles into a dispersal zone, thereby creating a low static pressure. This low pressure causes warm air from the room to be sucked towards the ventilation air passing through the battery. The volume of the warm indoor air is 4 to 5 times that of the ventilation air. The air is cooled as it passes through the battery, which consists of aluminium ribs with copper ducts filled with cold running water. The heat of the room is absorbed through the aluminium ribs and then transferred through the copper pipe to the water circuit and on to a central cooling unit. Despite the small external dimensions of the product, the construction makes it possible to achieve a high cooling effect. The nozzles releasing the ventilation air are designed to maintain the Coanda effect, i.e. the adhesive capacity of the air in the duct, in the nozzles. The air then follows the side of the duct towards the ceiling or the wall. In this way, the air "adheres" to the room's ceiling or wall, where the air velocity later diminishes.

Design

Plafond is available in three designs: B, C and D (see picture 2). The shape of the product is suitable for installation in a corner between a wall and a ceiling, or directly on a wall. If a uniform appearance throughout the whole room is desired, Plafond can be supplied either with an inactive part or fitted with side covers. The side covers have the same shape as the product, and can be designed to extend from wall to wall, max. 3.6 m.

For the best possible accessibility for cleaning, suspension, adjustment or maintenance, the whole front plate of Plafond can be removed. Valves and controls can be placed behind the front plate, so they are easily accessible for adjustment and maintenance. The beam is suspended before the front plate is put into place.

Plafond can be ordered with a preset airflow at a selected air pressure. By removing the nozzle plugs or plugging more nozzles, respectively, the airflow, if necessary, can be increased or decreased at a later time. The increase, however, is limited by the number of nozzles.

The water pipes are made of copper. Nevertheless, the water should be oxygen-free to prevent corrosion.

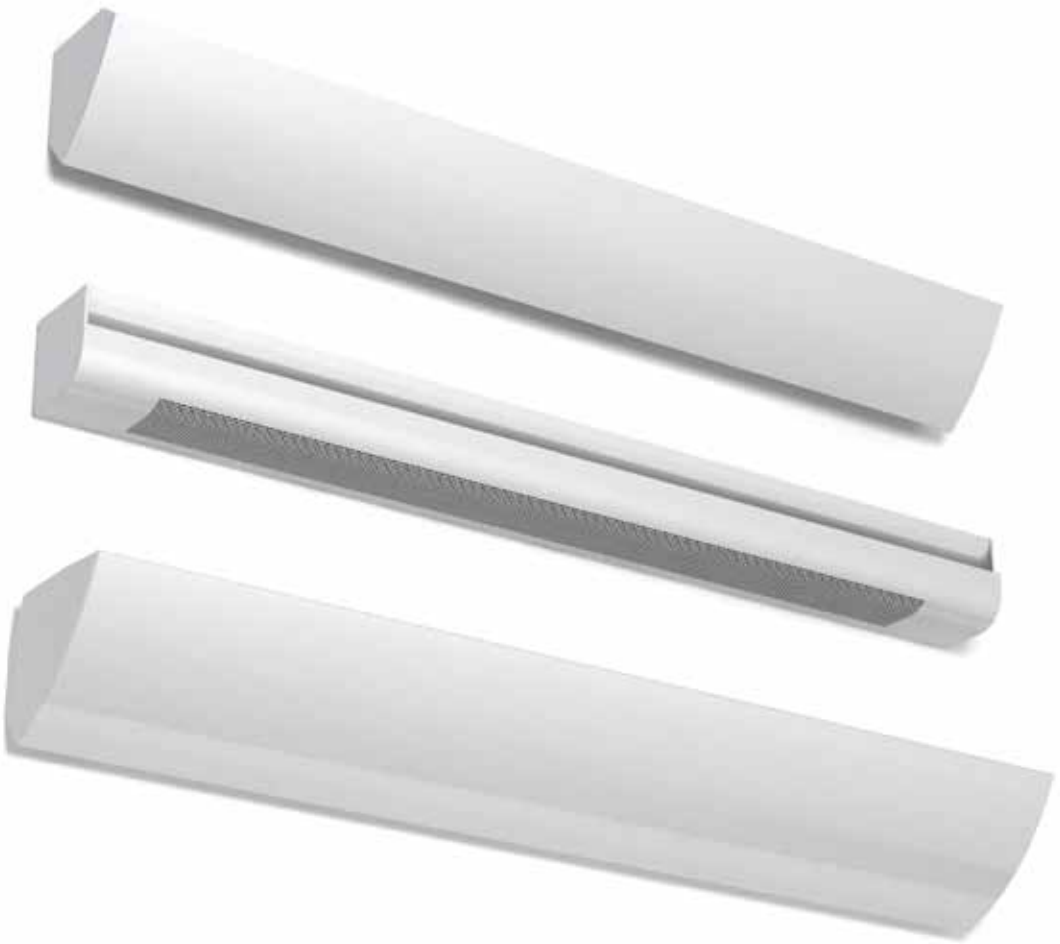

Picture 2. Plafond B (top), Plafond C (middle) and Plafond D (bottom).

We reserve the right to make changes

Supply air beam Plafond

Hygiene

Everything is accessible

The requirement for all parts of the beam to be easy to clean is met by the removable front plate (see picture 3). A cleaning hatch on the beam's air duct provides easy access so the air duct can be cleaned from the inside. The cooling battery is accessible from three sides and therefore can be cleaned thoroughly. The same applies to the Coanda nozzles, which are accessible from the sides or from underneath. All of this allows thorough cleaning of the product. It is of primary importance to be able to clean the batteries in products installed in premises with high concentrations of dust particles.

Room environment

The ventilation principle in Plafond can be selected according to the layout of the room and the location of the product. If the air is directed upwards, the ventilation principle is to spread the cooled air across the ceiling (see pictures 5 to 6). The heated air is then absorbed from the central area of the room and fed to the beam for further cooling. If the air is directed downwards, the ventilation principle is to spread the cooled air down along the walls (see picture 4).

Picture 3. Battery and air duct are accessible for maintenance and cleaning.

Picture 5. Plafond C with air injection across the ceiling.

The air reaches the floor, and then it is dispersed in the room. When the room air is heated, it rises to the ceiling to be cooled again. In both scenarios, the room is well ventilated.

Conventional supply air beams, which spread the air linearly, can create high air velocities, as the air stream tends to be compressed and concentrated towards the centre. To reduce air velocities, the air distribution in the Lindab Plafond is angled outwards. The outer nozzles point slightly outwards, which leads to air velocities that are significantly lower than those from conventional supply air beams, with a linear outlet.

As regards to noise, the nozzles are shaped like an inverted trumpet, i.e. some what negatively directed at the outlet, which also leads to very low noise from the nozzle.

Plafond's one-way air injection is especially suited for premises where the ceiling has beams or is at different levels. The construction is designed to enable the product to be installed with the air direction horizontal or vertical. The product's air circulation can thereby be adapted to the conditions of the specific room, resulting in low air velocities.

Picture 4. Plafond D with air injection across the wall.

Picture 6. Plafond C with air injection across the ceiling.

Supply air beam Plafond

1
2
3
4
5
6
7
8
9
10
11
12
13
14
15
16
17
18
19

Data

Versions

Size: Plafond is available in three different designs:
Plafond B has the format 320 × 301 mm.
Plafond C has the format 240 × 230 mm.
Plafond D has the format 357 × 301 mm.

Lengths: Plafond is available in lengths from 1.2 m to 3.6 m in steps of 0.1 m.

Water connection: The water connection is horizontal or vertical, with outer diameter of 15 mm.

Air connection: The air connection can be rotated into a horizontal or vertical position, Ø 100 mm.

Design: The perforations in the front plate are available in two versions, Slot and Dot. Slot is the standard perforation supplied.

Nozzle angle: The nozzles can be ordered with different angles, 0°, 16° or 30°. The standard is 30°.

Surface treatment: Plafond is manufactured as standard from enamelled sheet metal, colour white, RAL 9010.

Airflow control: The product has a preset pressure drop value, so on-site adjustment is not necessary. A prerequisite is that the duct system in the building has a relatively low-pressure drop compared to that of the product. Where a damper is desired, you can order a balancing damper.

Plus features

Factory preinstalled.

Heating: There is a heating option by way of an additional heating pipe in the battery.

Drypac™: Anti-condensation treated cooling batteries that enable water temperatures below the dew point without drips. Refer to the chapter Drypac™.

Integrated valve and actuator: A control valve, with variable Kv value, and an actuator can be pre-installed in the product.

Regula Secura: There is an option to have Lindab's Regula Secura condensation guard installed in the product.

Regula Connect: The product can be equipped with Regula Connect connection card (refer to the chapter Regula).

Air vent: Air vents are installed on the return side of the connection pipe.

Colour: Special colours and other surface finishes, e.g. galvanised and powder coating. Please contact Lindab for more information.

Accessories

Delivered separately.

Control: Refer to chapter Regula.

Side covers: Available in lengths of up to 3.6 m. Supplied non-perforated.

We reserve the right to make changes

Supply air beam Plafond

Dimensioning

Cooling capacity air P_a

1. Start by calculating the capacity required for the room, to keep a certain temperature. Lindab's TEKNOsim is an excellent tool for this.
2. Calculate which cooling capacity, or read in diagram 1, that is supplied by the ventilation air
3. Remaining cooling capacity needs to be cooled by the water circuit in Plafond

The formula for calculating the capacity air:

$P_a = q_{ma} \times c_{pa} \times \Delta t_{ra}$

Where:

q_{ma} = Air mass flow rate [kg/s]

c_{pa} = Specific heat capacity air [1,004 kj/kg K]

Δt_{ra} = Temperature difference between room air temperature and primary air temperature [K]

Size comparison by t_r, = 25°C with:

q_a = Primary air flow rate

P_a [W] = q_a [l/s] x 1,2 Δt_{ra} [K] and

P_a [W] = q_a [m³/h] x 0,33 Δt_{ra} [K]

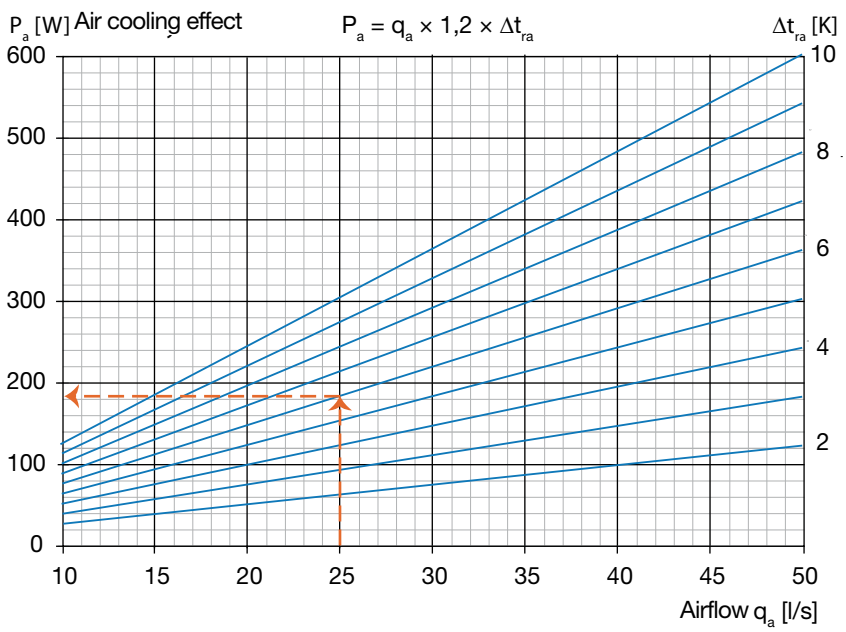

Diagram 1. Cooling capacity P_a, as function of the air quantity q_a. If the air supply is 25 l/s and the temperature difference of the supply Δt_{ra} = 6 K, then the cooling capacity in the chart is 180 W.

Supply air beam Plafond

1 2 3 4 5 6 7 8 9 10 11 12 13 14 15 16 17 18 19

Dimensioning

Effect diagram

Follow the instructions below to read off the effect from the diagram.

1. Calculate Δt_{rw} (room – mean water)
2. Product length L minus 0.5 m, to obtain the active length L_{act}.
3. Divide the airflow q_a by the active length L_{act}. Enter the result on the horizontal axis of diagram 2.
4. Follow the flow line to the right pressure, and then read off the effect P_{Lt} per active metre.
5. Multiply the effect read off by Δt_{rw}.
6. Then, multiply by the active length L_{act}

Cooling
What is the cooling effect of a 2.4 m Plafond with 20 l/s and pressure of 100 Pa?
The room's summer temperature is assumed to be t_r 24.5° C
The cooling water temperature in/out of Plafond is 14/17° C

Answer
Temperature difference $\Delta t_{rw} = t_r - (t_{wi} + t_{wo})/2$
Δt_{rw} = 24.5 - (14+17) / 2 = 9 K
Active length: L_{act} = 2.4 m - 0.5 m = 1.9 m
20 l/s / 1.9 m = 10.5 l/(s m)

Read off from diagram 2: P_{Lt} 34.75 W/(m K)
Cooling effect P_w = 34.75 × 9 K × 1.9 m = 594 W

NB! The effect diagram applies for a nominal flow of q_{wn} 0.038 l/s. To obtain the right effect at other flows, read off the effect factor from diagram 3 and multiply the effect, which is read off, by this factor (see example 1).

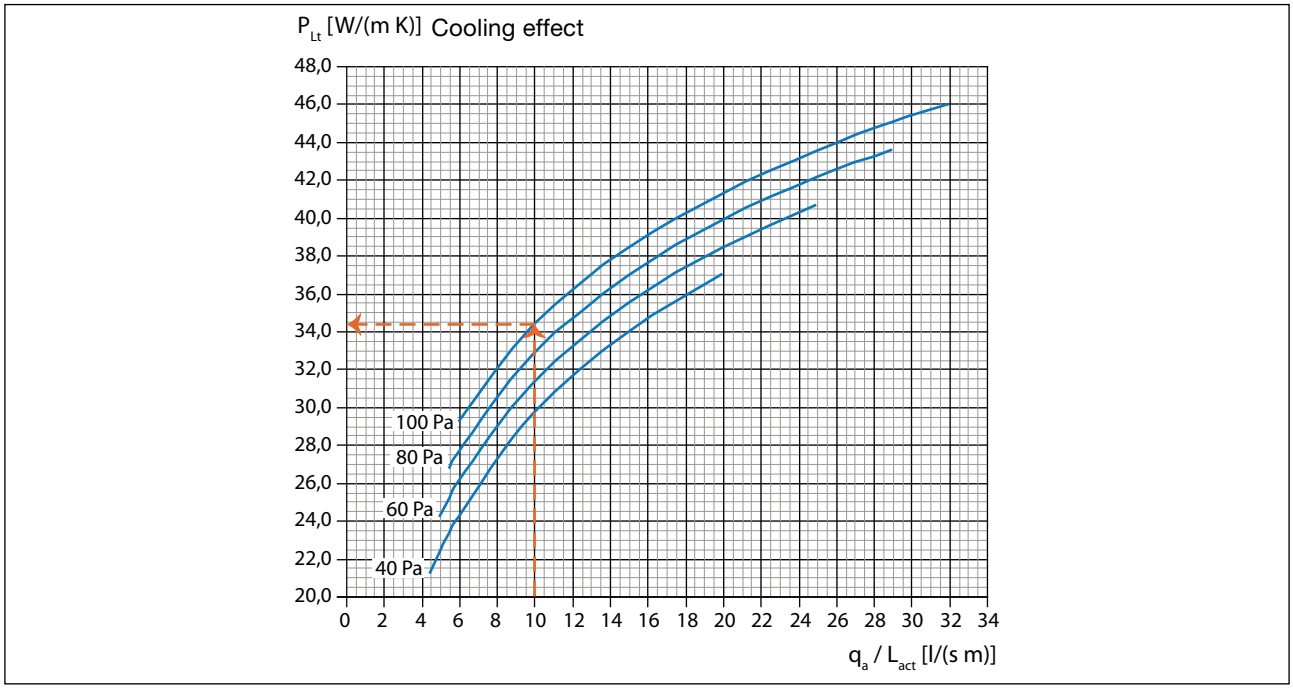

Diagram 2. Effect per active metre P_{Lt} as a function of airflow per active metre with nozzle pressures of 40, 60, 80 and 100 Pa.

Dimensioning

Pressure drop in air connection (Pa)

Table 1, below shows the pressure drop in the connection. After calculating the required pressure for the supply air beam, add it to the selected static pressure in the nozzles.

Example

Plafond-C-15-100-B2L-3.0 with 20 l/s and static nozzle pressure of 60 Pa. This provides a necessary total pressure in the duct of 60 Pa + 8 Pa = 68 Pa.

Plafond							
Air flow (l/s)	10	15	20	25	30	35	40
Pa	3	5	8	12	17	22	28

Table 1. Air pressure drop in connection in Plafond.

We reserve the right to make changes

Supply air beam Plafond

Dimensioning

Flow-adjusted effect factor ϵ

Example 1

Cooling
Read off the effect from the effect diagram and calculate your flow with the following formula: $q_w = P_w / (c_{pw} \times \Delta t_w)$

Where:
q_w = water flow [l/s]; (1 l = 1dm³ = 1 kg)
p_w = effect [W]
c_{pw}= specific heat capacity [4200 Ws/(kg K)]
$\Delta t_w = t_{wo} - t_{wi}$ = temperature difference in the water circuit in/out [K]

For example, q_w = 594 / (4200 x 3) = 0.047 l/s.

The effect factor ϵ will then be 1.04 (see diagram 3) and the new effect, P_w = 594 x 1.04 = 618 W.

With a new cooling effect, a new water flow is calculated.
q_w = 618 / (4200 x 3) = 0.049 l/s

Read off the effect factor at 1.042 and calculate the effect. P = 594 x 1.042 = 619W

The cooling effect is calculated to be 619 W.

Example 2

Heating
What is the heating effect of a 2.4 m Plafond with 20 l/s and pressure of 100 Pa?
The room's winter temperature is assumed to be t_r = 21° C
The hot water temperature in/out of Plafond is 56/46° C

Answer
Temperature difference $\Delta t_{rw} = t_r - (t_{wi} + t_{wo})/2$
Δt_{rw} = 21 - (56+46) / 2 = 30 K
Active length L_{act} = 2.4 m - 0.5 m = 1.9 m
20 l/s / 1.9 m = 10.5 l/(s·m)

Read off from diagram 2: P_{Lt} = 34.75 W/(m K).
Heating effect P_w = 34.75 × 30 K × 1.9 m = 1981 W

Use the calculated heating effect to calculate the water flow $q_w = P_w / (c_{pw} \times \Delta t_w)$

Δt_{rw} = temperature difference in the water circuit in/out [K]
q_w = 1981 / (4200 x 10) = 0.047 l/s

The effect factor will then be 0.83 (see diagram 3) and the new effect P_w = 1981 x 0.83 = 1644 W

With a new heating effect, a new water flow is calculated.
q_w = 1644 / (4200 x10) = 0.039 l/s

Read off the effect factor at 0.805 and calculate the effect. P = 1981 x 0.805 = 1595W

With a new heating effect, a new water flow is calculated.
q_w = 1595 / (4200 x10) = 0.038 l/s

Read off the effect factor (the value is 0.8) to calculate the effect. P_w = 1981 x 0.8 = 1585W

With the new heating effect, a new water flow is calculated. q_w = 1585 / (4200 x10) = 0.038 l/s

The effect factor will then be 0.8 and the heating effect is 1585 W.

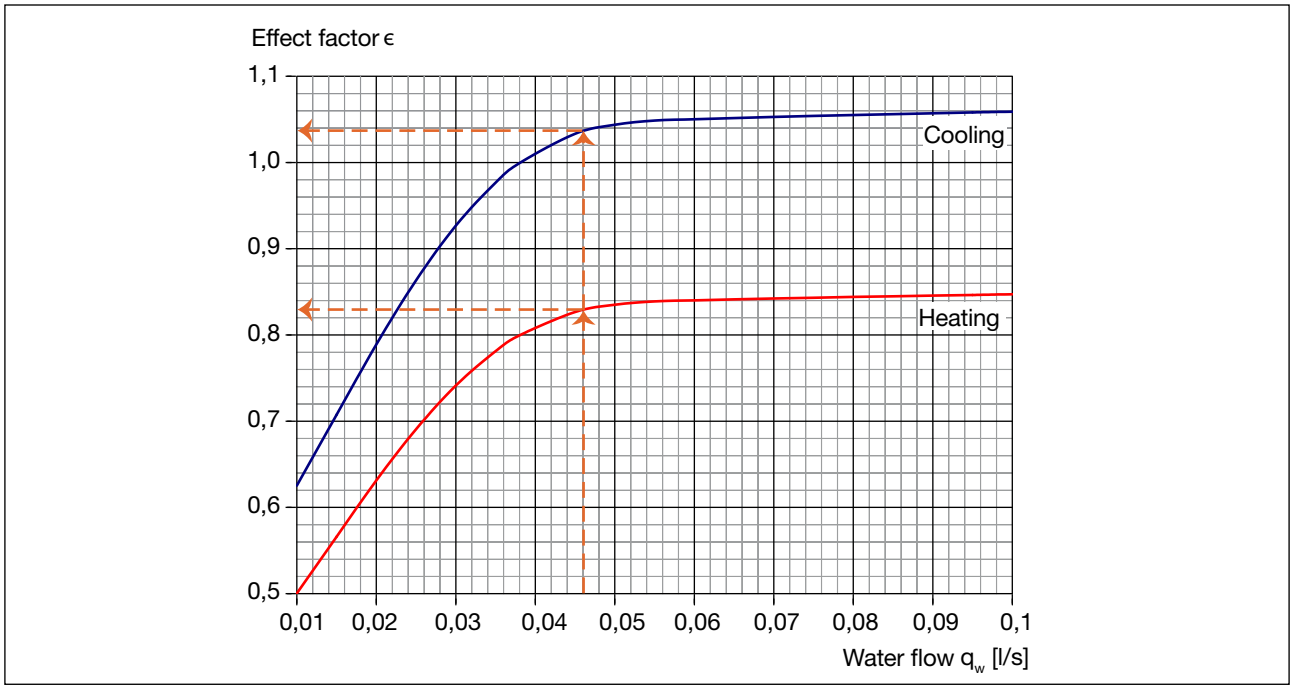

Diagram 3. Effect factor as a function of water flow.

Supply air beam Plafond

Cooling effect

Drypac™ condensation protection

Drypac™ is a condensation protection consisting of Perlite (volcanic stone), which is applied to the fin surfaces. Drypac™ has properties that enable it to work with a supply temperature that is 4° C below the dew point, for continuous operation, and 5 to 8° C below the dew point for limited periods. Drypac™ provides both an increased effect output and increased security against condensation drips. At a working temperature above the dew point, output is reduced by 17 % but when the working temperature is below the dew point, there is no reduction in output. This means that the effect is highest when the need is greatest.
For more information about Drypac™, refer to the chapter Drypac™.

Effect data

All table values are presented with flow-adjusted effects based on the Δt for Water out-in given in the table.

Lindab's supply air beams are Eurovent-certified and tested according to EN-15116, EN-14518.

Noise

The table below presents both the sound pressure level with 10 m² Sabine equivalent sound absorption area dB(A) and the sound output level.

Nozzle pressure 60 Pa			Water															Air		
q_A (m³/h)	q_A (l/s)	Plafond	Δt_{rw} = 7 K			Δt_{rw} = 8 K			Δt_{rw} = 9 K			Δt_{rw} = 10 K			Δt_{rw} = 11 K			Total pressure, duct	Noise level	Noise level
			P(W)	q(l/s)	p(kPa)	P(W)	q(l/s)	p(kPa)	P(W)	q(l/s)	p(kPa)	P(W)	q(l/s)	p(kPa)	P(W)	q(l/s)	p(kPa)	Pa	dB(A)	dB(A)
36	10	1,2	103	0,008	0,1	123	0,010	0,1	144	0,011	0,1	168	0,013	0,1	195	0,016	0,1	63	<20	<24
		1,8	179	0,014	0,2	221	0,018	0,3	268	0,021	0,4	320	0,025	0,5	373	0,030	0,6			
		2,4	258	0,021	0,5	322	0,026	0,7	389	0,031	1,0	454	0,036	1,3	515	0,041	1,6			
54	15	1,5	118	0,009	0,1	141	0,011	0,1	168	0,013	0,1	197	0,016	0,1	230	0,018	0,2	65	21	25
		1,8	228	0,018	0,3	284	0,023	0,4	345	0,027	0,6	407	0,032	0,8	467	0,037	0,9			
		2,4	337	0,027	0,8	416	0,033	1,1	490	0,039	1,5	559	0,044	1,9	621	0,049	2,3			
		3,0	435	0,035	1,6	521	0,041	2,2	597	0,048	2,8	669	0,053	3,4	737	0,059	4,0			
72	20	1,8	264	0,021	0,4	330	0,026	0,5	398	0,032	0,7	463	0,037	0,9	525	0,042	1,2	68	24	28
		2,4	401	0,032	1,1	485	0,039	1,5	561	0,045	1,9	633	0,050	2,3	697	0,056	2,8			
		3,0	509	0,040	2,1	596	0,047	2,8	676	0,054	3,4	752	0,060	4,2	829	0,066	4,9			
		3,6	593	0,047	3,4	684	0,054	4,4	771	0,061	5,4	858	0,068	6,5	945	0,075	7,8			
90	25	1,8	290	0,023	0,4	361	0,029	0,6	433	0,034	0,8	500	0,040	1,1	562	0,045	1,3	72	26	30
		2,4	448	0,036	1,3	534	0,043	1,7	611	0,049	2,2	684	0,054	2,7	753	0,060	3,2			
		3,0	564	0,045	2,5	654	0,052	3,2	737	0,059	4,0	820	0,065	4,9	904	0,072	5,8			
		3,6	653	0,052	4,0	748	0,060	5,1	844	0,067	6,3	939	0,075	7,7	1034	0,082	9,2			
108	30	1,8	311	0,025	0,5	386	0,031	0,7	459	0,037	0,9	527	0,042	1,2	589	0,047	1,4	77	27	31
		2,4	483	0,038	1,5	569	0,045	1,9	649	0,052	2,4	722	0,057	2,9	795	0,063	3,5			
		3,0	607	0,048	2,8	698	0,056	3,6	787	0,063	4,5	876	0,070	5,5	965	0,077	6,5			
		3,6	702	0,056	4,6	804	0,064	5,8	906	0,072	7,2	1008	0,080	8,8	1111	0,088	10,5			
126	35	2,4	508	0,040	1,6	595	0,047	2,1	675	0,054	2,6	751	0,060	3,2	828	0,066	3,8	82	28	32
		3,0	641	0,051	3,1	734	0,058	4,0	828	0,066	4,9	921	0,073	6,0	1015	0,081	7,1			
		3,6	743	0,059	5,0	851	0,068	6,4	959	0,076	8,0	1067	0,085	9,7	1176	0,094	11,6			
144	40	2,4	528	0,042	1,7	615	0,049	2,2	697	0,055	2,8	775	0,062	3,3	854	0,068	4,0	88	30	34
		3,0	666	0,053	3,4	763	0,061	4,3	860	0,069	5,3	958	0,076	6,4	1055	0,084	7,7			
		3,6	777	0,062	5,5	890	0,071	7,0	1004	0,080	8,7	1117	0,089	10,6	1231	0,098	12,6			

Table 2. Flow-adjusted effect table. Cooling circuit Δt = 3° C (Water in-out).
For the red values, the flow is below the recommended minimum flow of 0.035 l/s at Δt = 3° C. Increase the flow to the recommended minimum flow.

We reserve the right to make changes

Supply air beam Plafond

Cooling effect, Plafond

Nozzle pressure 80 Pa			Water															Air		
q_A (m³/h)	q_A (l/s)	Plafond	Δt_{rw} = 7 K			Δt_{rw} = 8 K			Δt_{rw} = 9 K			Δt_{rw} = 10 K			Δt_{rw} = 11 K			Total pres-sure, duct	Noise level	Noise level
			P(W)	q(l/s)	p(kPa)	P(W)	q(l/s)	p(kPa)	P(W)	q(l/s)	p(kPa)	P(W)	q(l/s)	p(kPa)	P(W)	q(l/s)	p(kPa)	Pa	dB(A)	dB(A)
36	10	1,5	108	0,009	0,1	129	0,010	0,1	153	0,012	0,1	179	0,014	0,1	207	0,017	0,1	83	<20	<24
		1,8	194	0,015	0,2	241	0,019	0,3	293	0,023	0,4	348	0,028	0,6	404	0,032	0,7			
54	15	1,5	124	0,010	0,1	149	0,012	0,1	177	0,014	0,1	209	0,017	0,1	244	0,019	0,2	85	22	26
		1,8	244	0,019	0,3	305	0,024	0,5	369	0,029	0,6	433	0,035	0,8	494	0,039	1,0			
		2,4	366	0,029	0,9	448	0,036	1,3	523	0,042	1,7	592	0,047	2,1	657	0,052	2,5			
		3,0	472	0,038	1,9	559	0,045	2,5	638	0,051	3,1	710	0,057	3,8	783	0,062	4,5			
72	20	1,5	139	0,011	0,1	168	0,013	0,1	201	0,016	0,1	239	0,019	0,2	280	0,022	0,2	88	25	29
		1,8	282	0,022	0,4	351	0,028	0,6	421	0,034	0,8	488	0,039	1,0	550	0,044	1,2			
		2,4	429	0,034	1,2	514	0,041	1,6	591	0,047	2,1	662	0,053	2,5	729	0,058	3,0			
		3,0	542	0,043	2,3	631	0,050	3,1	712	0,057	3,8	792	0,063	4,6	873	0,069	5,4			
		3,6	632	0,050	3,8	724	0,058	4,8	816	0,065	6,0	909	0,072	7,2	1001	0,080	8,6			
90	25	1,8	309	0,025	0,5	383	0,031	0,7	456	0,036	0,9	524	0,042	1,1	586	0,047	1,4	92	27	31
		2,4	474	0,038	1,4	561	0,045	1,9	640	0,051	2,4	712	0,057	2,9	785	0,062	3,4			
		3,0	594	0,047	2,7	685	0,055	3,5	772	0,061	4,4	860	0,068	5,3	947	0,075	6,3			
		3,6	688	0,055	4,4	788	0,063	5,6	888	0,071	7,0	989	0,079	8,4	1089	0,087	10,1			
108	30	1,8	331	0,026	0,5	408	0,033	0,8	483	0,038	1,0	551	0,044	1,3	614	0,049	1,5	97	28	32
		2,4	507	0,040	1,6	594	0,047	2,1	674	0,054	2,6	751	0,060	3,2	827	0,066	3,7			
		3,0	636	0,051	3,1	729	0,058	3,9	822	0,065	4,9	915	0,073	5,9	1008	0,080	7,1			
		3,6	736	0,059	5,0	843	0,067	6,3	950	0,076	7,9	1057	0,084	9,6	1165	0,093	11,4			
126	35	1,8	355	0,028	0,6	435	0,035	0,8	511	0,041	1,1	579	0,046	1,4	644	0,051	1,6	102	29	33
		2,4	532	0,042	1,7	620	0,049	2,2	701	0,056	2,8	780	0,062	3,4	860	0,068	4,0			
		3,0	668	0,053	3,4	765	0,061	4,3	862	0,069	5,3	959	0,076	6,4	1057	0,084	7,7			
		3,6	776	0,062	5,5	889	0,071	7,0	1002	0,080	8,7	1115	0,089	10,5	1229	0,098	12,6			
144	40	2,4	552	0,044	1,8	642	0,051	2,4	723	0,058	2,9	805	0,064	3,6	887	0,071	4,2	108	31	35
		3,0	693	0,055	3,6	794	0,063	4,6	894	0,071	5,7	996	0,079	6,9	1097	0,087	8,2			
		3,6	810	0,065	5,9	928	0,074	7,5	1046	0,083	9,4	1165	0,093	11,4	1283	0,102	13,7			

Table 3. Flow-adjusted effect table. Cooling circuit Δt = 3° C (Water in-out).
For the red values, the flow is below the recommended minimum flow of 0.035 l/s at Δt = 3° C. Increase the flow to the recommended minimum flow.

Nozzle pressure 100 Pa			Water															Air		
q_A (m³/h)	q_A (l/s)	Plafond	Δt_{rw} = 7 K			Δt_{rw} = 8 K			Δt_{rw} = 9 K			Δt_{rw} = 10 K			Δt_{rw} = 11 K			Total pres-sure, duct	Noise level	Noise level
			P(W)	q(l/s)	p(kPa)	P(W)	q(l/s)	p(kPa)	P(W)	q(l/s)	p(kPa)	P(W)	q(l/s)	p(kPa)	P(W)	q(l/s)	p(kPa)	Pa	dB(A)	dB(A)
36	10	1,5	114	0,009	0,1	136	0,011	0,1	161	0,013	0,1	189	0,015	0,1	220	0,017	0,2	103	<20	<24
		1,8	211	0,017	0,3	262	0,021	0,4	319	0,025	0,5	378	0,030	0,7	436	0,035	0,8			
54	15	1,5	129	0,010	0,1	156	0,012	0,1	186	0,015	0,1	219	0,017	0,2	256	0,020	0,2	105	22	26
		1,8	261	0,021	0,4	326	0,026	0,5	394	0,031	0,7	459	0,037	0,9	520	0,041	1,1			
		2,4	396	0,032	1,1	480	0,038	1,4	556	0,044	1,9	626	0,050	2,3	692	0,055	2,7			
72	20	1,5	144	0,011	0,1	175	0,014	0,1	211	0,017	0,1	250	0,020	0,2	293	0,023	0,2	108	26	30
		1,8	299	0,024	0,5	371	0,030	0,6	443	0,035	0,9	510	0,041	1,1	572	0,046	1,3			
		2,4	456	0,036	1,3	542	0,043	1,8	619	0,049	2,2	692	0,055	2,7	762	0,061	3,2			
		3,0	575	0,046	2,6	665	0,053	3,3	749	0,060	4,1	834	0,066	5,0	919	0,073	6,0			
		3,6	670	0,053	4,2	767	0,061	5,3	865	0,069	6,6	963	0,077	8,1	1061	0,084	9,6			
90	25	1,8	325	0,026	0,5	402	0,032	0,7	476	0,038	1,0	544	0,043	1,2	606	0,048	1,5	112	28	32
		2,4	498	0,040	1,5	585	0,047	2,0	665	0,053	2,5	740	0,059	3,1	815	0,065	3,7			
		3,0	623	0,050	3,0	717	0,057	3,8	808	0,064	4,7	899	0,072	5,7	990	0,079	6,8			
		3,6	724	0,058	4,8	829	0,066	6,1	935	0,074	7,6	1040	0,083	9,3	1146	0,091	11,1			
108	30	1,8	347	0,028	0,6	426	0,034	0,8	501	0,040	1,1	570	0,045	1,3	635	0,051	1,6	117	29	33
		2,4	529	0,042	1,7	617	0,049	2,2	698	0,056	2,8	777	0,062	3,4	856	0,068	4,0			
		3,0	663	0,053	3,3	759	0,060	4,2	856	0,068	5,2	952	0,076	6,4	1049	0,084	7,6			
		3,6	770	0,061	5,4	882	0,070	6,9	994	0,079	8,5	1107	0,088	10,4	1219	0,097	12,4			
126	35	1,8	371	0,030	0,6	453	0,036	0,9	529	0,042	1,2	598	0,048	1,4	663	0,053	1,7	122	30	34
		2,4	553	0,044	1,8	642	0,051	2,4	724	0,058	3,0	806	0,064	3,6	888	0,071	4,3			
		3,0	693	0,055	3,6	793	0,063	4,6	894	0,071	5,7	995	0,079	6,9	1097	0,087	8,2			
		3,6	809	0,064	5,9	927	0,074	7,5	1045	0,083	9,3	1163	0,093	11,4	1281	0,102	13,6			
144	40	1,8	405	0,032	0,7	489	0,039	1,0	565	0,045	1,3	636	0,051	1,6	701	0,056	1,9	128	32	36
		2,4	571	0,046	2,0	661	0,053	2,5	746	0,059	3,1	830	0,066	3,8	914	0,073	4,5			
		3,0	717	0,057	3,8	821	0,065	4,9	926	0,074	6,0	1030	0,082	7,3	1135	0,090	8,8			
		3,6	842	0,067	6,3	965	0,077	8,1	1088	0,087	10,1	1211	0,096	12,3	1334	0,106	14,7			

Table 4. Flow-adjusted effect table. Cooling circuit Δt = 3° C (Water in-out).
For the red values, the flow is below the recommended minimum flow of 0.035 l/s at Δt = 3° C. Increase the flow to the recommended minimum flow.

Supply air beam Plafond

Heating effect, Plafond

Nozzle pressure 60 Pa			Water															Air		
q_A (m³/h)	q_A (l/s)	Plafond	Δt_{rw} = 20 K			Δt_{rw} = 25 K			Δt_{rw} = 30 K			Δt_{rw} = 35 K			Δt_{rw} = 40 K			Total pres-sure, duct	Noise level	Noise level
			P(W)	q(l/s)	p(kPa)	P(W)	q(l/s)	p(kPa)	P(W)	q(l/s)	p(kPa)	P(W)	q(l/s)	p(kPa)	P(W)	q(l/s)	p(kPa)	Pa	dB(A)	dB(A)
36	10	1,2	218	0,005	0,0	284	0,007	0,0	356	0,009	0,0	437	0,010	0,0	528	0,013	0,0	63	<20	<24
		1,8	353	0,008	0,0	476	0,011	0,1	624	0,015	0,1	798	0,019	0,1	996	0,024	0,2			
		2,4	479	0,011	0,1	670	0,016	0,2	901	0,022	0,2	1162	0,028	0,4	1428	0,034	0,5			
54	15	1,2	246	0,006	0,0	322	0,008	0,0	408	0,010	0,0	505	0,012	0,0	617	0,015	0,1	65	21	25
		1,8	432	0,010	0,1	596	0,014	0,1	796	0,019	0,1	1027	0,025	0,2	1274	0,030	0,3			
		2,4	609	0,015	0,1	871	0,021	0,2	1177	0,028	0,4	1487	0,036	0,6	1773	0,042	0,8			
		3,0	791	0,019	0,3	1144	0,027	0,5	1510	0,036	0,8	1841	0,044	1,1	2140	0,051	1,4			
72	20	1,8	490	0,012	0,1	685	0,016	0,1	923	0,022	0,2	1190	0,028	0,3	1458	0,035	0,4	68	24	28
		2,4	723	0,017	0,2	1045	0,025	0,3	1394	0,033	0,5	1722	0,041	0,7	2012	0,048	0,9			
		3,0	957	0,023	0,4	1369	0,033	0,6	1756	0,042	1,0	2100	0,050	1,3	2405	0,057	1,7			
		3,6	1183	0,028	0,6	1642	0,039	1,1	2038	0,049	1,6	2395	0,057	2,1	2743	0,066	2,7			
90	25	1,8	531	0,013	0,1	751	0,018	0,1	1015	0,024	0,2	1301	0,031	0,3	1578	0,038	0,4	72	26	30
		2,4	819	0,020	0,2	1183	0,028	0,4	1554	0,037	0,6	1886	0,045	0,8	2186	0,052	1,1			
		3,0	1103	0,026	0,5	1548	0,037	0,8	1942	0,046	1,2	2291	0,055	1,6	2624	0,063	2,0			
		3,6	1359	0,032	0,8	1834	0,044	1,3	2241	0,054	1,9	2622	0,063	2,5	3003	0,072	3,1			
108	30	1,8	566	0,014	0,1	804	0,019	0,1	1088	0,026	0,2	1386	0,033	0,3	1669	0,040	0,5	77	27	31
		2,4	895	0,021	0,2	1288	0,031	0,4	1669	0,040	0,7	2004	0,048	0,9	2309	0,055	1,2			
		3,0	1224	0,029	0,5	1687	0,040	0,9	2084	0,050	1,3	2446	0,058	1,7	2802	0,067	2,2			
		3,6	1505	0,036	0,9	1987	0,047	1,5	2407	0,058	2,1	2815	0,067	2,8	3225	0,077	3,6			
126	35	2,4	956	0,023	0,3	1367	0,033	0,5	1754	0,042	0,7	2091	0,050	1,0	2403	0,057	1,3	82	28	32
		3,0	1321	0,032	0,6	1793	0,043	1,0	2199	0,053	1,4	2572	0,061	1,9	2946	0,070	2,4			
		3,6	1624	0,039	1,1	2117	0,051	1,7	2548	0,061	2,3	2980	0,071	3,1	3413	0,082	4,0			
144	40	2,4	1006	0,024	0,3	1431	0,034	0,5	1821	0,043	0,8	2165	0,052	1,1	2480	0,059	1,4	88	30	34
		3,0	1399	0,033	0,7	1876	0,045	1,1	2286	0,055	1,5	2674	0,064	2,0	3062	0,073	2,6			
		3,6	1721	0,041	1,2	2216	0,053	1,8	2667	0,064	2,5	3119	0,075	3,4	3572	0,085	4,3			

Table 5. Flow-adjusted effect table. Heating circuit Δt = 10° C (Water in-out).
For the red values, the flow is below the recommended minimum flow of 0.035 l/s at Δt = 10° C. Increase the flow to the recommended minimum flow.

Nozzle pressure 80 Pa			Water															Air		
q_A (m³/h)	q_A (l/s)	Plafond	Δt_{rw} = 20 K			Δt_{rw} = 25 K			Δt_{rw} = 30 K			Δt_{rw} = 35 K			Δt_{rw} = 40 K			Total pres-sure, duct	Noise level	Noise level
			P(W)	q(l/s)	p(kPa)	P(W)	q(l/s)	p(kPa)	P(W)	q(l/s)	p(kPa)	P(W)	q(l/s)	p(kPa)	P(W)	q(l/s)	p(kPa)	Pa	dB(A)	dB(A)
36	10	1,2	228	0,005	0,0	298	0,007	0,0	375	0,009	0,0	462	0,011	0,0	560	0,013	0,0	83	<20	<24
		1,8	377	0,009	0,0	513	0,012	0,1	677	0,016	0,1	869	0,021	0,2	1085	0,026	0,2			
54	15	1,2	257	0,006	0,0	337	0,008	0,0	429	0,010	0,0	533	0,013	0,0	653	0,016	0,1	85	22	26
		1,8	458	0,011	0,1	636	0,015	0,1	854	0,020	0,2	1102	0,026	0,2	1361	0,033	0,3			
		2,4	659	0,016	0,2	949	0,023	0,3	1276	0,030	0,4	1596	0,038	0,6	1885	0,045	0,8			
		3,0	872	0,021	0,3	1256	0,030	0,6	1635	0,039	0,9	1969	0,047	1,2	2272	0,054	1,5			
72	20	1,2	283	0,007	0,0	375	0,009	0,0	481	0,011	0,0	603	0,014	0,0	745	0,018	0,1	88	25	29
		1,8	518	0,012	0,1	729	0,017	0,1	985	0,024	0,2	1265	0,030	0,3	1540	0,037	0,4			
		2,4	778	0,019	0,2	1125	0,027	0,4	1488	0,036	0,6	1818	0,043	0,8	2117	0,051	1,0			
		3,0	1042	0,025	0,4	1475	0,035	0,7	1867	0,045	1,1	2212	0,053	1,5	2533	0,061	1,9			
		3,6	1294	0,031	0,7	1764	0,042	1,2	2169	0,052	1,8	2537	0,061	2,3	2906	0,069	2,9			
90	25	1,8	561	0,013	0,1	797	0,019	0,1	1078	0,026	0,2	1376	0,033	0,3	1657	0,040	0,5	92	27	31
		2,4	876	0,021	0,2	1262	0,030	0,4	1641	0,039	0,7	1975	0,047	0,9	2278	0,054	1,2			
		3,0	1187	0,028	0,5	1646	0,039	0,9	2042	0,049	1,3	2400	0,057	1,7	2749	0,066	2,2			
		3,6	1464	0,035	0,9	1945	0,046	1,4	2360	0,056	2,0	2760	0,066	2,7	3162	0,076	3,4			
108	30	1,8	598	0,014	0,1	855	0,020	0,2	1155	0,028	0,3	1463	0,035	0,4	1748	0,042	0,5	97	28	32
		2,4	954	0,023	0,3	1365	0,033	0,5	1752	0,042	0,7	2089	0,050	1,0	2400	0,057	1,3			
		3,0	1307	0,031	0,6	1778	0,042	1,0	2183	0,052	1,4	2553	0,061	1,9	2925	0,070	2,4			
		3,6	1604	0,038	1,0	2090	0,050	1,6	2524	0,060	2,3	2952	0,071	3,0	3381	0,081	3,9			
126	35	1,8	639	0,015	0,1	918	0,022	0,2	1237	0,030	0,3	1554	0,037	0,4	1842	0,044	0,6	102	29	33
		2,4	1016	0,024	0,3	1444	0,034	0,5	1834	0,044	0,8	2178	0,052	1,1	2495	0,060	1,4			
		3,0	1402	0,034	0,7	1880	0,045	1,1	2290	0,055	1,6	2678	0,064	2,1	3067	0,073	2,6			
		3,6	1718	0,041	1,2	2212	0,053	1,8	2662	0,064	2,5	3114	0,074	3,3	3567	0,085	4,3			
144	40	2,4	1069	0,026	0,3	1508	0,036	0,6	1901	0,045	0,9	2247	0,054	1,1	2574	0,061	1,5	108	31	35
		3,0	1479	0,035	0,7	1959	0,047	1,2	2376	0,057	1,7	2780	0,066	2,2	3184	0,076	2,8			
		3,6	1810	0,043	1,3	2310	0,055	2,0	2780	0,066	2,7	3252	0,078	3,6	3724	0,089	4,6			

Table 6. Flow-adjusted effect table. Heating circuit Δt = 10° C (Water in-out).
For the red values, the flow is below the recommended minimum flow of 0.035 l/s at Δt = 10° C. Increase the flow to the recommended minimum flow.

We reserve the right to make changes

Supply air beam Plafond

Heating effect, Plafond

Nozzle pressure 100 Pa			Water															Air		
q_A (m³/h)	q_A (l/s)	Plafond	Δt_{rw} = 20 K			Δt_{rw} = 25 K			Δt_{rw} = 30 K			Δt_{rw} = 35 K			Δt_{rw} = 40 K			Total pressure, duct	Noise level	Noise level
			P(W)	q(l/s)	p(kPa)	P(W)	q(l/s)	p(kPa)	P(W)	q(l/s)	p(kPa)	P(W)	q(l/s)	p(kPa)	P(W)	q(l/s)	p(kPa)	Pa	dB(A)	dB(A)
36	10	1,2	238	0,006	0,0	311	0,007	0,0	393	0,009	0,0	486	0,012	0,0	591	0,014	0,0	103	<20	<24
		1,8	404	0,010	0,1	554	0,013	0,1	735	0,018	0,1	947	0,023	0,2	1180	0,028	0,3			
54	15	1,2	266	0,006	0,0	350	0,008	0,0	446	0,011	0,0	557	0,013	0,0	684	0,016	0,1	105	22	26
		1,8	485	0,012	0,1	678	0,016	0,1	913	0,022	0,2	1177	0,028	0,3	1445	0,035	0,4			
		2,4	715	0,017	0,2	1032	0,025	0,3	1379	0,033	0,5	1706	0,041	0,7	1996	0,048	0,9			
72	20	1,2	293	0,007	0,0	389	0,009	0,0	500	0,012	0,0	630	0,015	0,1	779	0,019	0,1	108	26	30
		1,8	544	0,013	0,1	771	0,018	0,1	1043	0,025	0,2	1334	0,032	0,3	1613	0,039	0,4			
		2,4	835	0,020	0,2	1205	0,029	0,4	1579	0,038	0,6	1912	0,046	0,9	2212	0,053	1,1			
		3,0	1131	0,027	0,5	1582	0,038	0,8	1977	0,047	1,2	2328	0,056	1,6	2666	0,064	2,0			
		3,6	1410	0,034	0,8	1888	0,045	1,4	2298	0,055	1,9	2688	0,064	2,6	3079	0,074	3,3			
90	25	1,8	588	0,014	0,1	839	0,020	0,2	1135	0,027	0,2	1440	0,034	0,4	1724	0,041	0,5	112	28	32
		2,4	932	0,022	0,3	1337	0,032	0,5	1722	0,041	0,7	2058	0,049	1,0	2367	0,057	1,3			
		3,0	1273	0,030	0,6	1741	0,042	1,0	2146	0,051	1,4	2510	0,060	1,8	2875	0,069	2,3			
		3,6	1571	0,038	1,0	2055	0,049	1,6	2484	0,059	2,2	2905	0,069	2,9	3327	0,079	3,8			
108	30	1,8	625	0,015	0,1	897	0,021	0,2	1210	0,029	0,3	1524	0,036	0,4	1811	0,043	0,5	117	29	33
		2,4	1009	0,024	0,3	1435	0,034	0,5	1825	0,044	0,8	2169	0,052	1,1	2485	0,059	1,4			
		3,0	1388	0,033	0,7	1864	0,045	1,1	2273	0,054	1,5	2659	0,064	2,0	3045	0,073	2,6			
		3,6	1701	0,041	1,1	2195	0,052	1,8	2642	0,063	2,5	3090	0,074	3,3	3539	0,085	4,2			
126	35	1,8	668	0,016	0,1	962	0,023	0,2	1293	0,031	0,3	1614	0,039	0,4	1903	0,045	0,6	122	30	34
		2,4	1071	0,026	0,3	1510	0,036	0,6	1903	0,045	0,9	2250	0,054	1,1	2577	0,062	1,5			
		3,0	1478	0,035	0,7	1959	0,047	1,2	2376	0,057	1,7	2779	0,066	2,2	3183	0,076	2,8			
		3,6	1807	0,043	1,3	2307	0,055	2,0	2776	0,066	2,7	3247	0,078	3,6	3719	0,089	4,6			
144	40	1,8	730	0,017	0,1	1055	0,025	0,2	1406	0,034	0,3	1734	0,041	0,5	2025	0,048	0,7	128	32	36
		2,4	1123	0,027	0,4	1572	0,038	0,6	1966	0,047	0,9	2317	0,055	1,2	2654	0,063	1,5			
		3,0	1550	0,037	0,8	2034	0,049	1,3	2460	0,059	1,8	2877	0,069	2,3	3295	0,079	3,0			
		3,6	1892	0,045	1,4	2401	0,057	2,1	2890	0,069	2,9	3380	0,081	3,9	3871	0,092	5,0			

Table 7. Flow-adjusted effect table. Heating circuit Δt = 10° C (Water in-out).
For the red values, the flow is below the recommended minimum flow of 0.035 l/s at Δt = 10° C. Increase the flow to the recommended minimum flow.

Supply air beam Plafond

Couplings & connections

Plafond is supplied in lengths from 1.2 m to 3.6 m in steps of 0.1 m. The connection dimension is 15 mm o.d. for the water and 100 mm for the air.

Plafond is available with a large number of coupling options. This is how to find the designation for the coupling option you require for Plafond:

Step 1.
Indicate the position for the ventilation connection.

Step 2.
Indicate the position for the pipe connection.

Step 3.
Indicate the direction for the air injection: L or R.

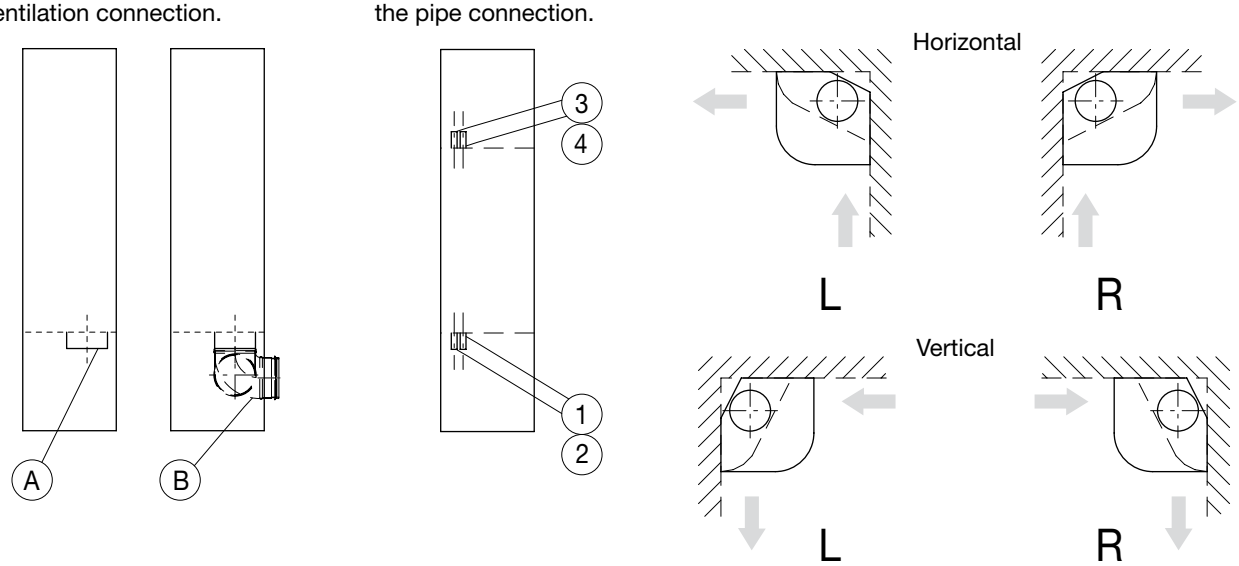

Figure 1 Connections 2 and 4 are vertical and are provided with elbow couplings.

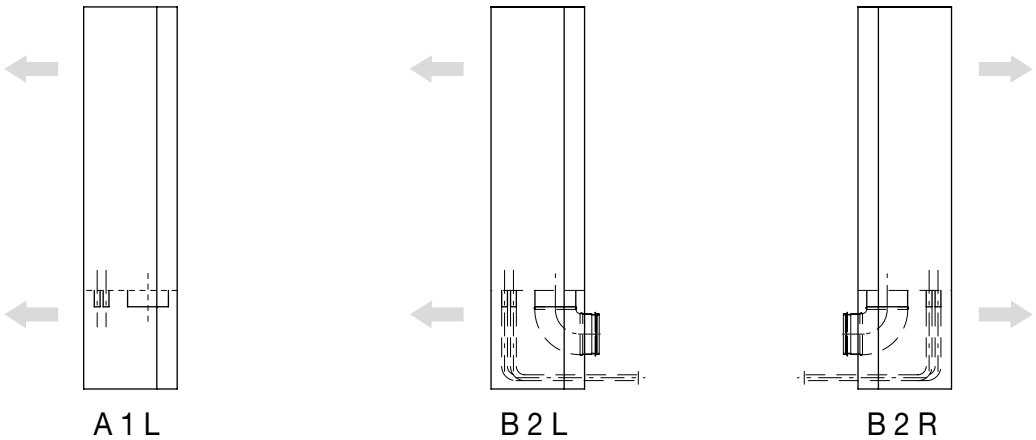

Figure 2. Examples of standard coupling options, horizontal air injection. Type A1L, therefore, has the air connection on the end piece, pipe on the same end piece and the direction of air injection L.

We reserve the right to make changes

Supply air beam Plafond

Width & height, mm

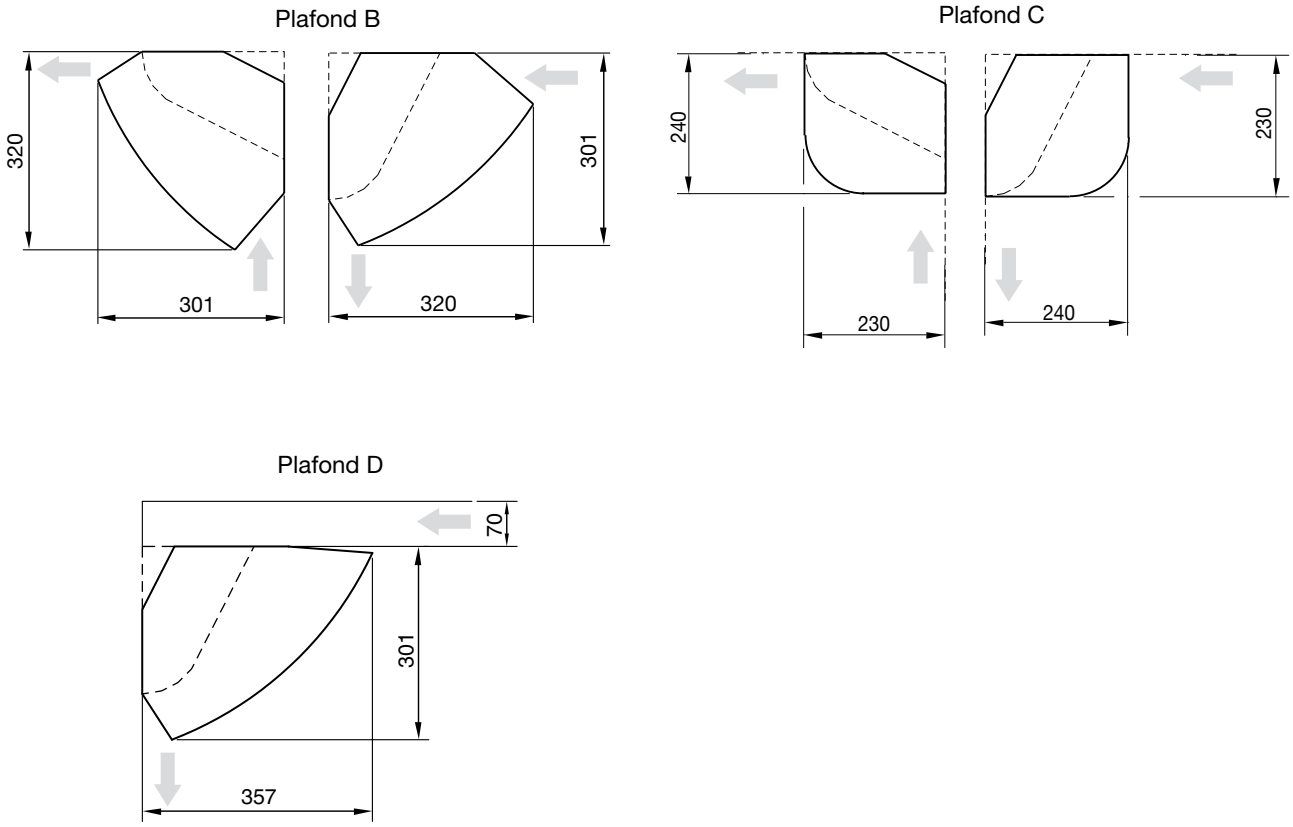

Length, m

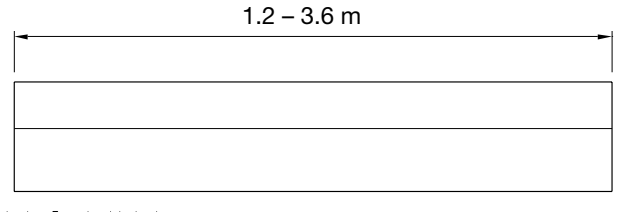

Figure 3. Plafond B, C and D, width, height and length.

Supply air beam Plafond

Dimensions, mm

Connection A1, A3

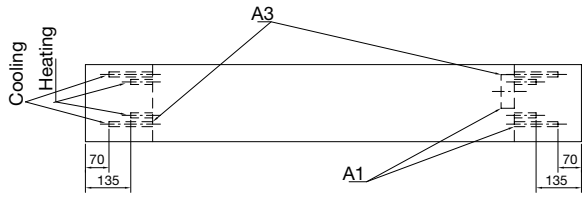

Connection B2

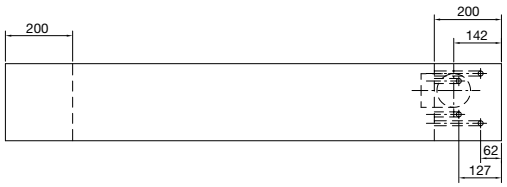

Plafond B

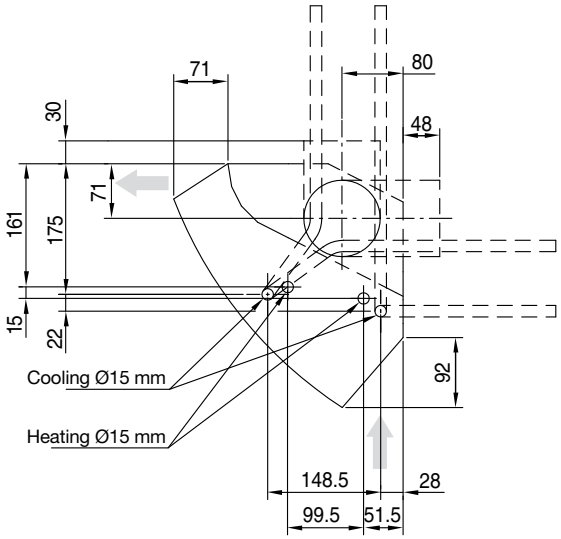

Plafond C

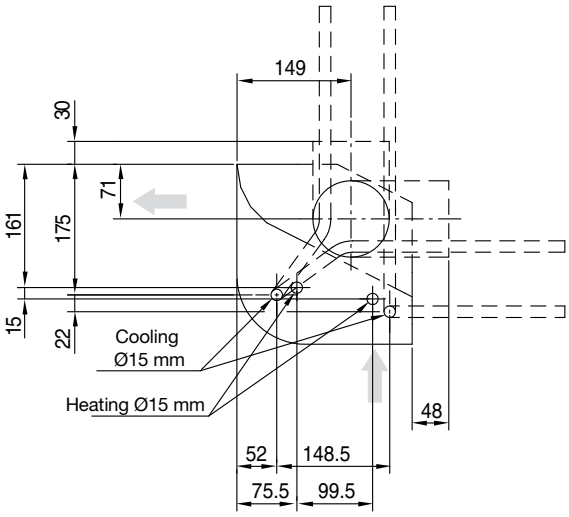

Plafond D

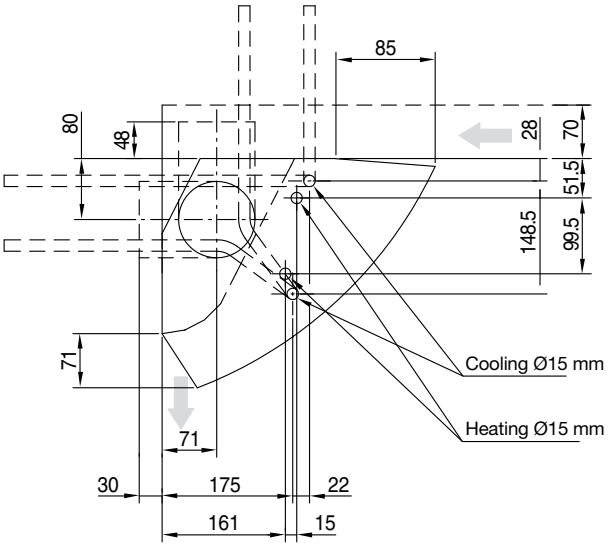

Figure 4. Plafond B, C and D, dimensions.

Weight and water volume

	Plafond
Weight, kg/m	11.5
Water content, l/m	0.65
Copper pipes, connection Ø, mm	15
Copper pipes, battery	12
Copper pipes, quality	SS/EN 12449
Pressure class	PN10

Table 8. Plafond, weight and water volume.

We reserve the right to make changes

Supply air beam Plafond

Suspension, mm

Plafond B

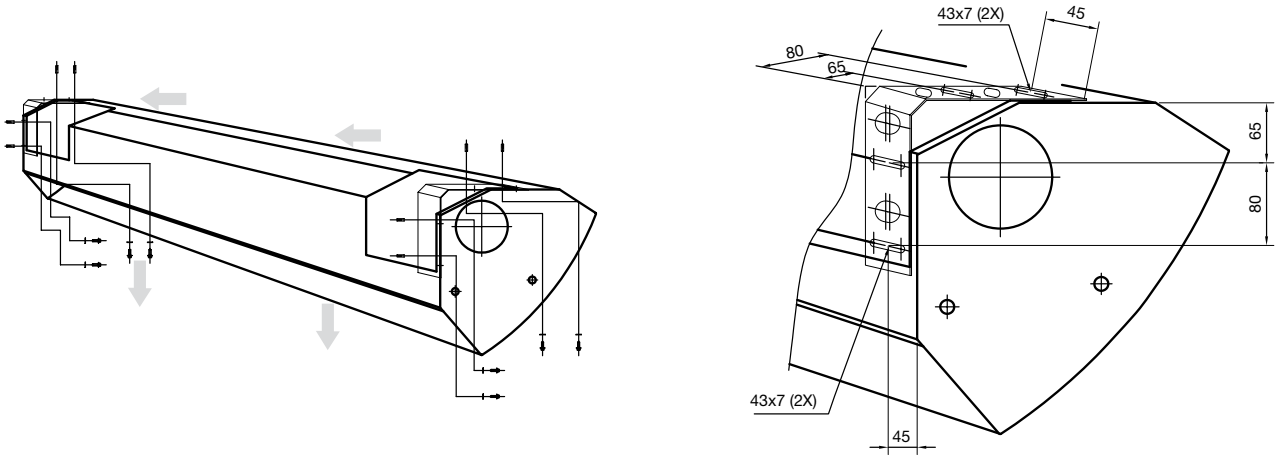

Plafond C

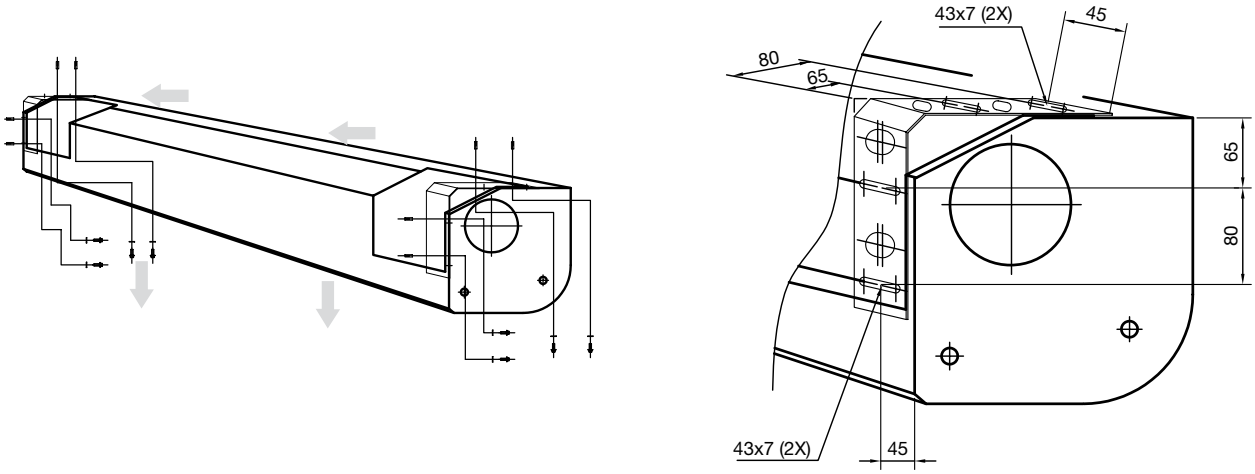

Plafond D

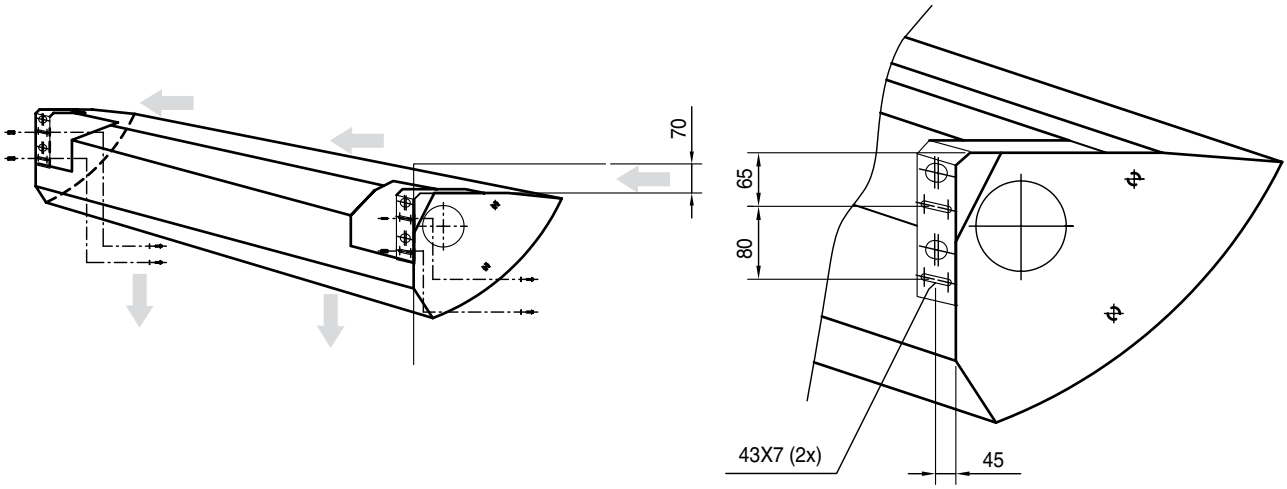

Figure 5. Plafond B, C and D.

Supply air beam Plafond

Installation examples

Plafond is always installed visibly and fixed to the ceiling or wall.

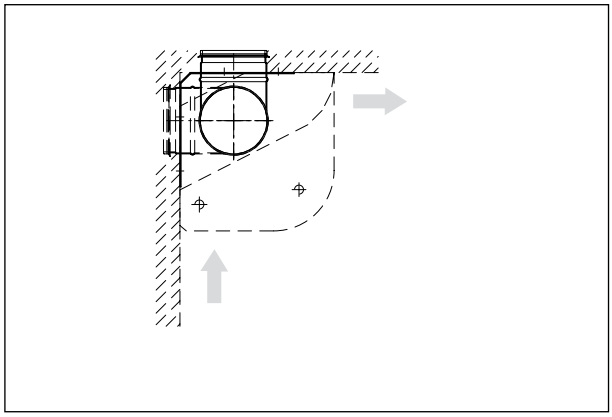

Figure 6. Plafond with air distribution along the ceiling.

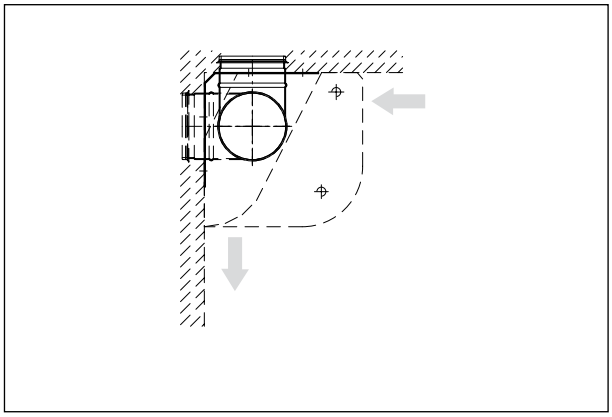

Figure 7. Plafond with air distribution along the wall.

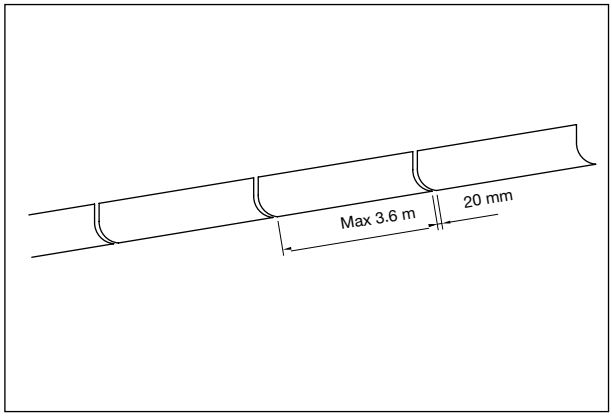

Figure 8. Several Plafond beams installed side by side.

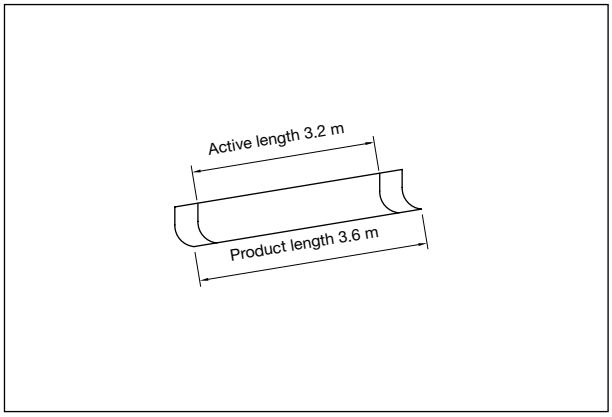

Figure 9. Maximum product length.

We reserve the right to make changes

Supply air beam

Plafond

Installation of side covers

When installing Plafond with side covers, it can be difficult to place the beam and the side cover in a straight line, if the walls and ceiling are uneven. Therefore, a gap (20 mm) is recommended between the beam and the side cover to indicate the different parts.

Picture 7. Complete installation of Plafond B without side cover.

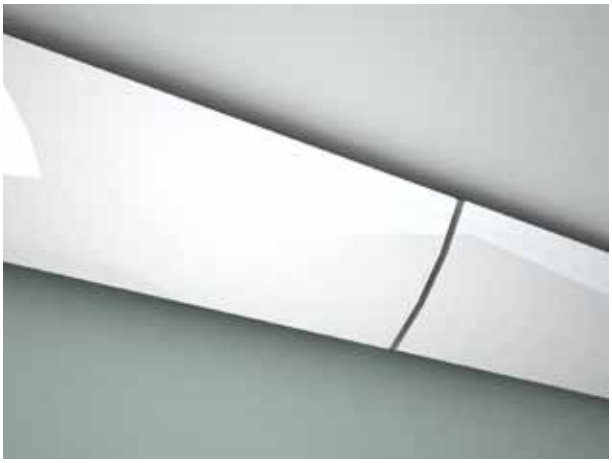

Picture 8. Complete installation of Plafond B with side cover.

Picture 9. Complete installation of Plafond C without side cover.

Picture 10. Complete installation of Plafond C with side cover.

Supply air beam Plafond

1
2
3
4
5
6
7
8
9
10
11
12
13
14
15
16
17
18
19

Distribution diagrams & throw lengths

Plafond and other induction beams utilise the pressure of the supply air to cause the room air to circulate through the cooling battery. This enables a high cooling effect, but also creates significant air movements, which often result in long throw lengths. This is why Plafond is supplied as standard with an air distribution that is angled outwards. It significantly reduces both throw lengths and air velocities compared to the conventional linear nozzle technology.

Depending on the room conditions, Plafond is also available with a long or a short distribution profile. Below is an example of how the nozzle angle affects the throw length and air velocity.

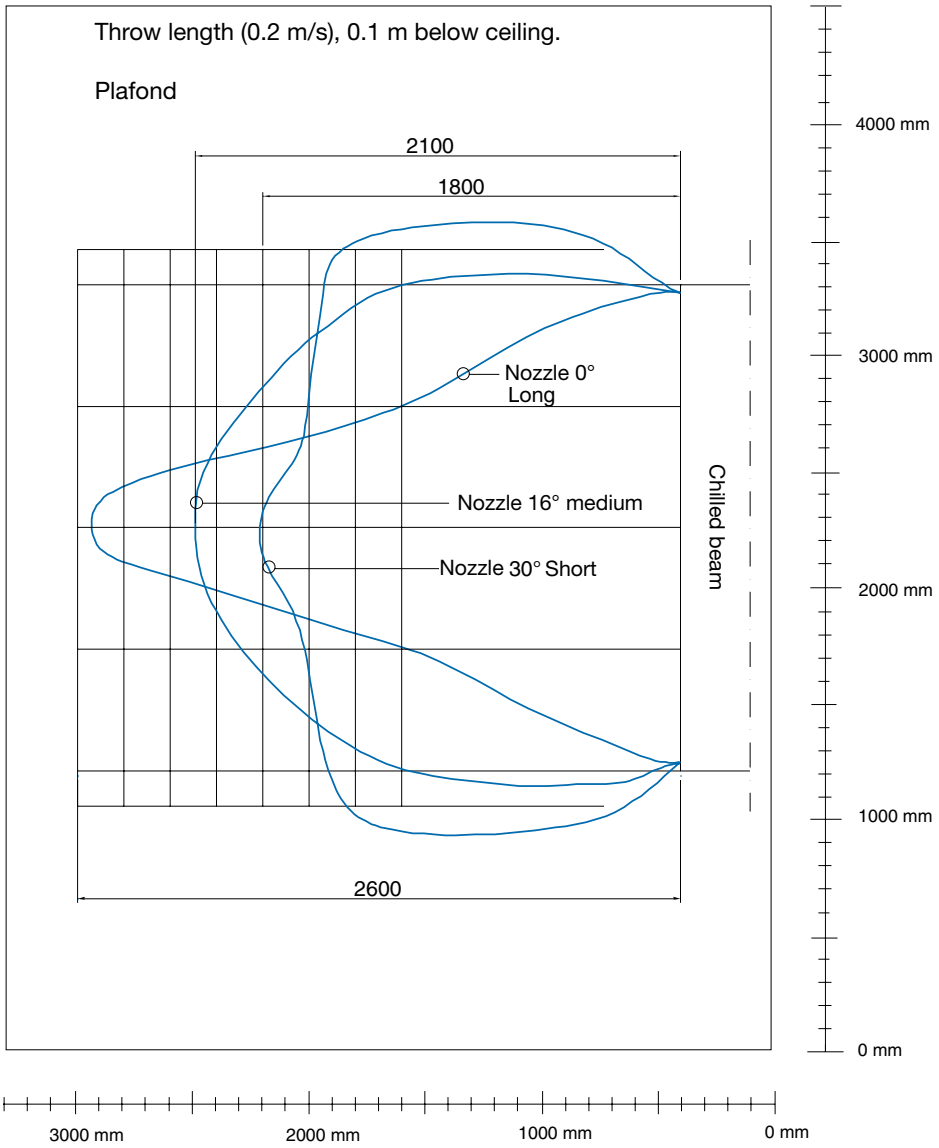

Figure 9. Plafond distribution profile, short 30°, medium 16° and long 0°.

We reserve the right to make changes

Supply air beam Plafond

Long distribution profile

Height to the beam's lower edge: 2600 mm.
Airflow: 22 l/s per active metre.
Air duct pressure: 60 Pa.
ΔT room – mean water temperature: 9.0° C.
ΔT room – supply air temperature: 5.0° C.
Air velocities with long distribution profile (nozzle angle 0°).

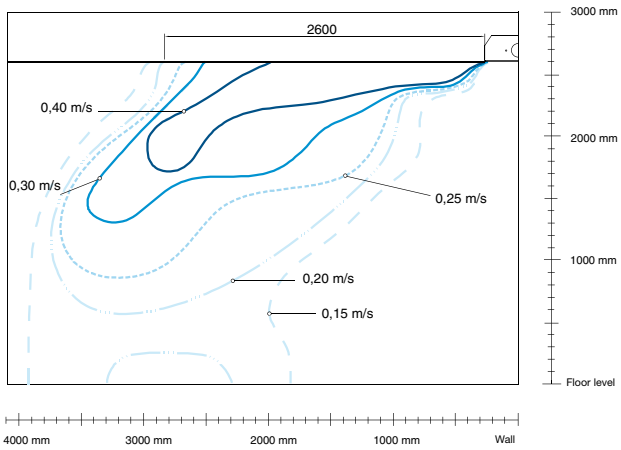

Medium distribution profile

Height to the beam's lower edge: 2600 mm.
Airflow: 22 l/s per active metre.
Air duct pressure: 60 Pa.
ΔT room – mean water temperature: 9.0° C.
ΔT room – supply air temperature: 5.0° C.
Air velocities with medium distribution profile (nozzle angle 16°).

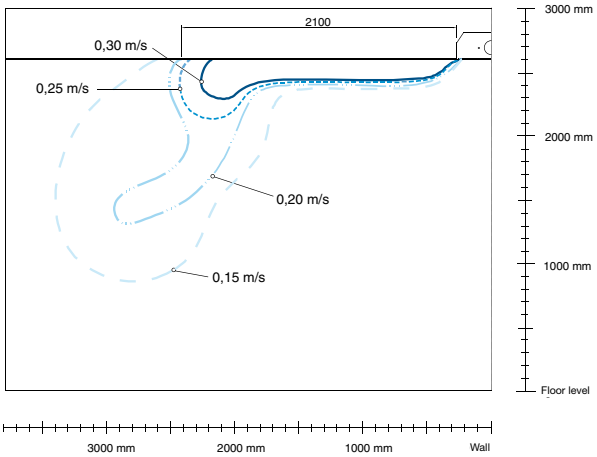

Standard distribution profile

Height to the beam's lower edge: 2600 mm.
Airflow: 22 l/s per active metre.
Air duct pressure: 60 Pa.
ΔT room – mean water temperature: 9.0° C.
ΔT room – supply air temperature: 5.0° C.
Air velocities with standard distribution profile (nozzle angle 30°).

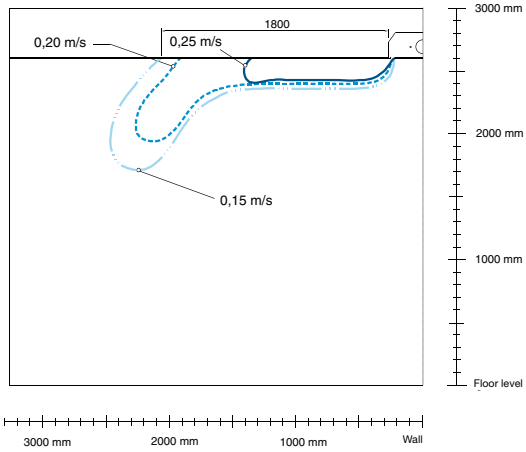

Figure 10. Plafond distribution profiles, standard (30°), medium (16°) and long (0°) at an air flow of 22 l/s per active metre and air duct pressure of 60 Pa.

For information concerning air velocities and throw lengths at other airflows, please contact Lindab.

Supply air beam Plafond

1
2
3
4
5
6
7
8
9
10
11
12
13
14
15
16
17
18
19

Distribution diagrams

The measurements were conducted with cooled supply air (Δt room air – supply air) of 5° C and cooling in the water circuit (Δt – room air – mean water temperature) of 8° C. All heat supplied through the walls.

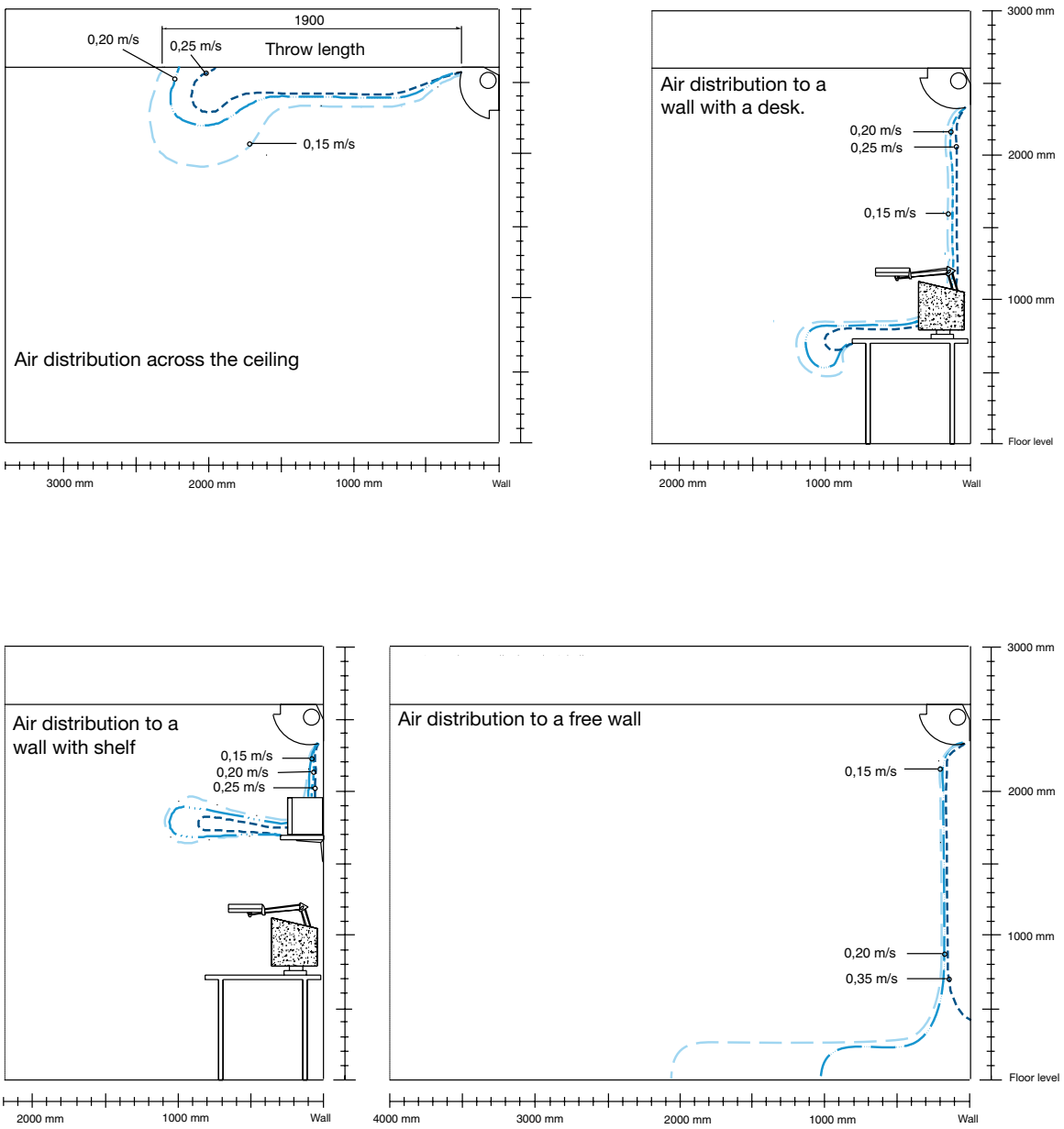

Figure 11. Air velocities below a supply air beam with airflow of 8 l/s per active metre and a standard distribution profile (nozzles angled 30°).

We reserve the right to make changes

Supply air beam

Plafond

Distribution diagrams

The measurements were conducted with cooled supply air (Δt room air – supply air) of 5° C and cooling in the water circuit (Δt – room air – mean water temperature) of 8° C. All heat supplied through the walls.

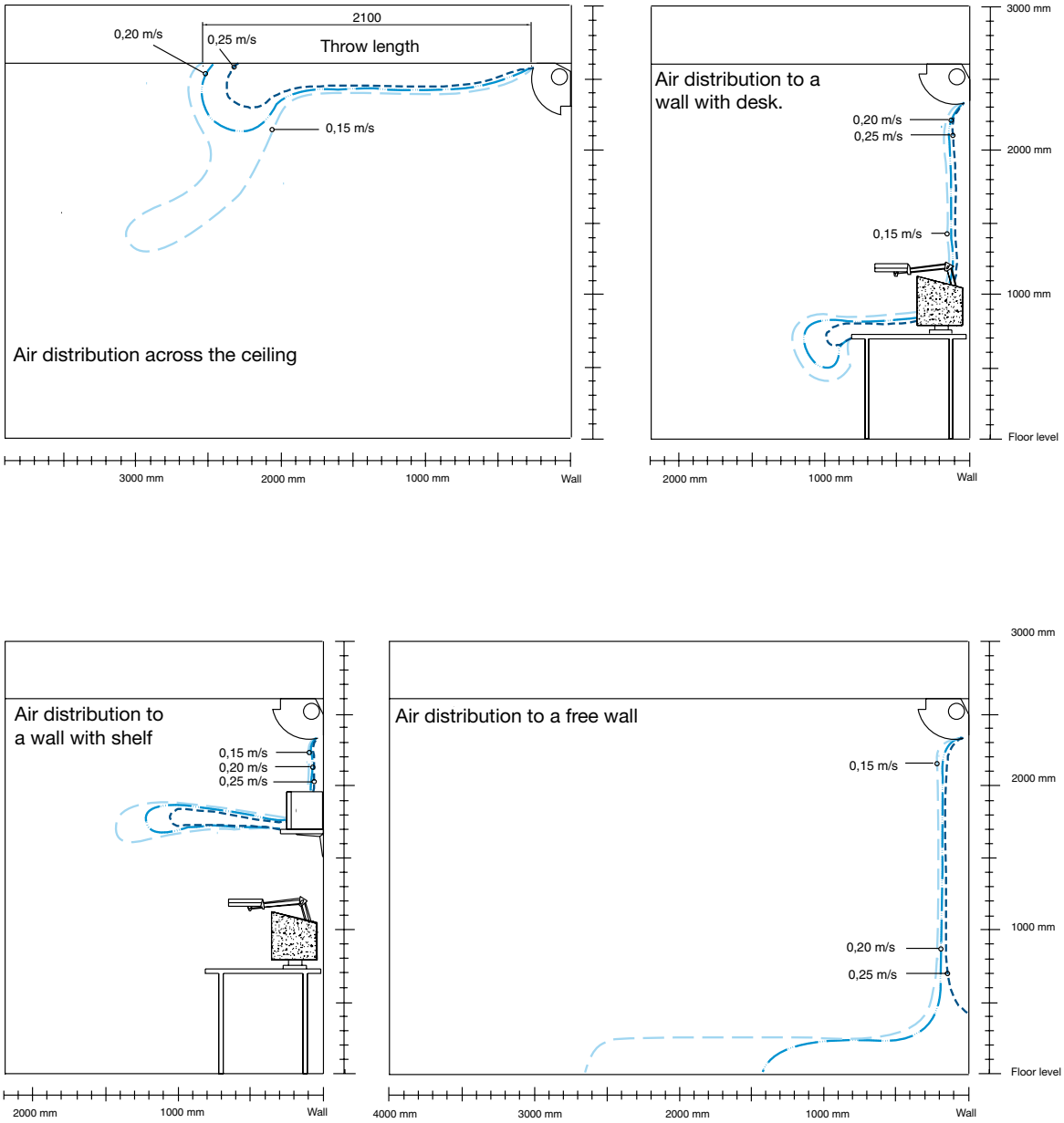

Figure 12. Air velocities below a supply air beam with an airflow of 11 l/s per active metre and standard distribution profile (nozzles angled 30°).

Supply air beam Plafond

Distribution diagrams

The measurements were conducted with cooled supply air (Δt room air – supply air) of 5° C and cooling in the water circuit (Δt – room air – mean water temperature) of 8° C. All heat supplied through the walls.

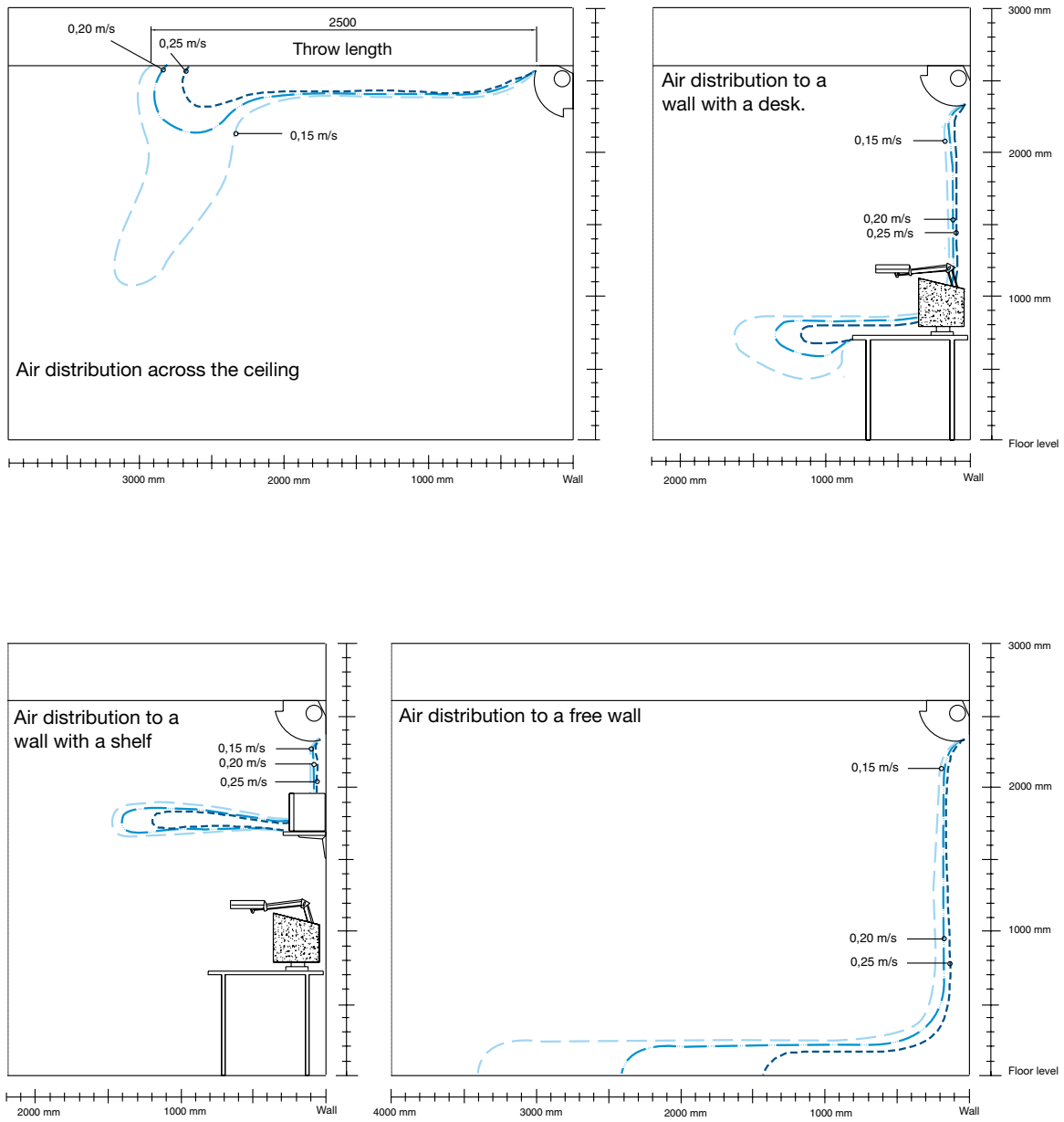

Figure 13. Air velocities below a supply air beam with airflow of 14 l/s per active metre and a standard distribution profile (nozzles angled 30°).

We reserve the right to make changes

Supply air beam

Plafond

Distribution diagrams

The measurements were conducted with cooled supply air (Δt room air – supply air) of 5° C and cooling in the water circuit (Δt – room air – mean water temperature) of 8° C. All heat supplied through the walls.

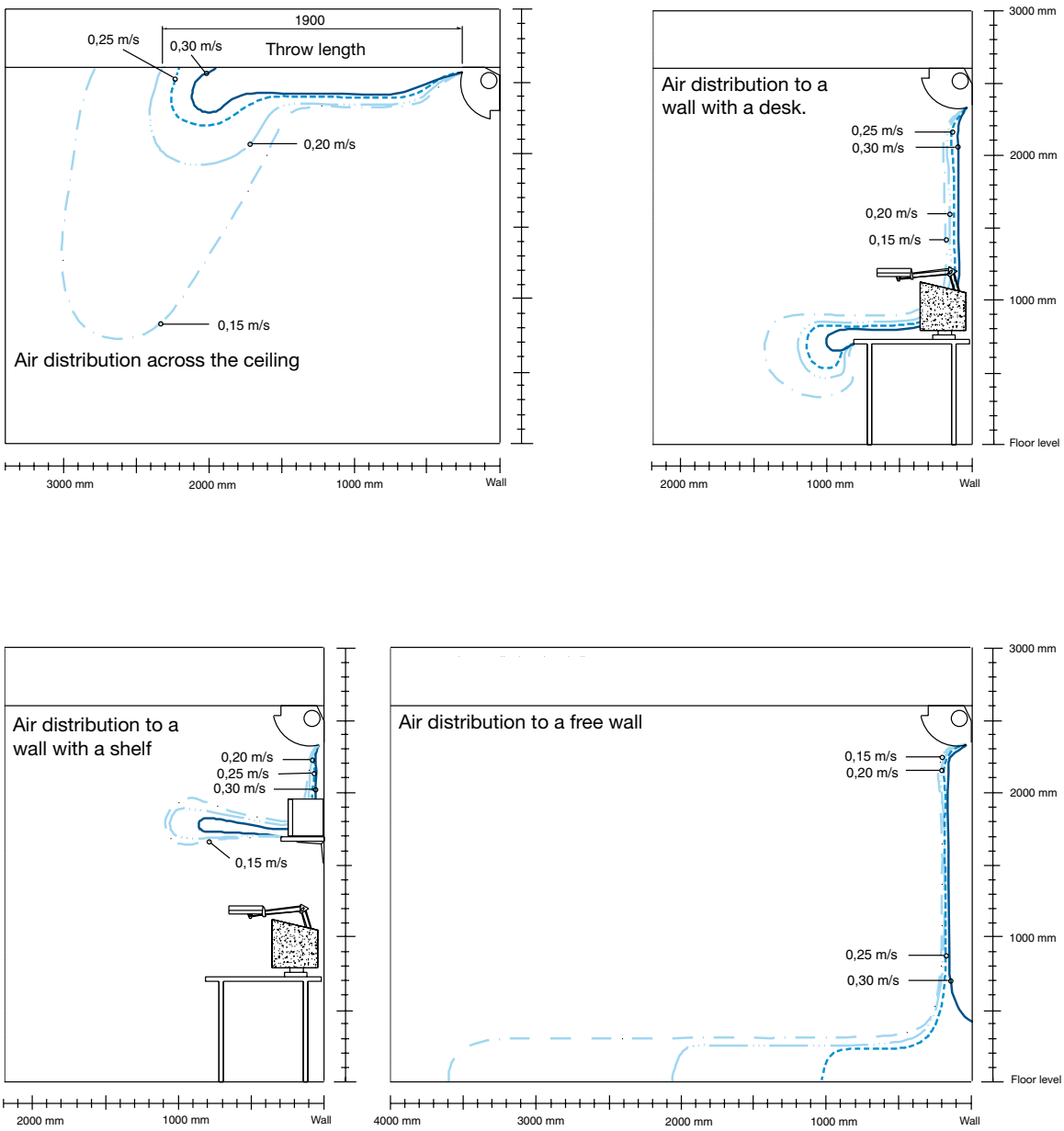

Figure 14. Air velocities below a supply air beam with airflow of 8 l/s per active metre and a standard distribution profile (nozzles angled 16°).

Supply air beam Plafond

1
2
3
4
5
6
7
8
9
10
11
12
13
14
15
16
17
18
19

Distribution diagrams

The measurements were conducted with cooled supply air (Δt room air – supply air) of 5° C and cooling in the water circuit (Δt – room air – mean water temperature) of 8° C. All heat supplied through the walls.

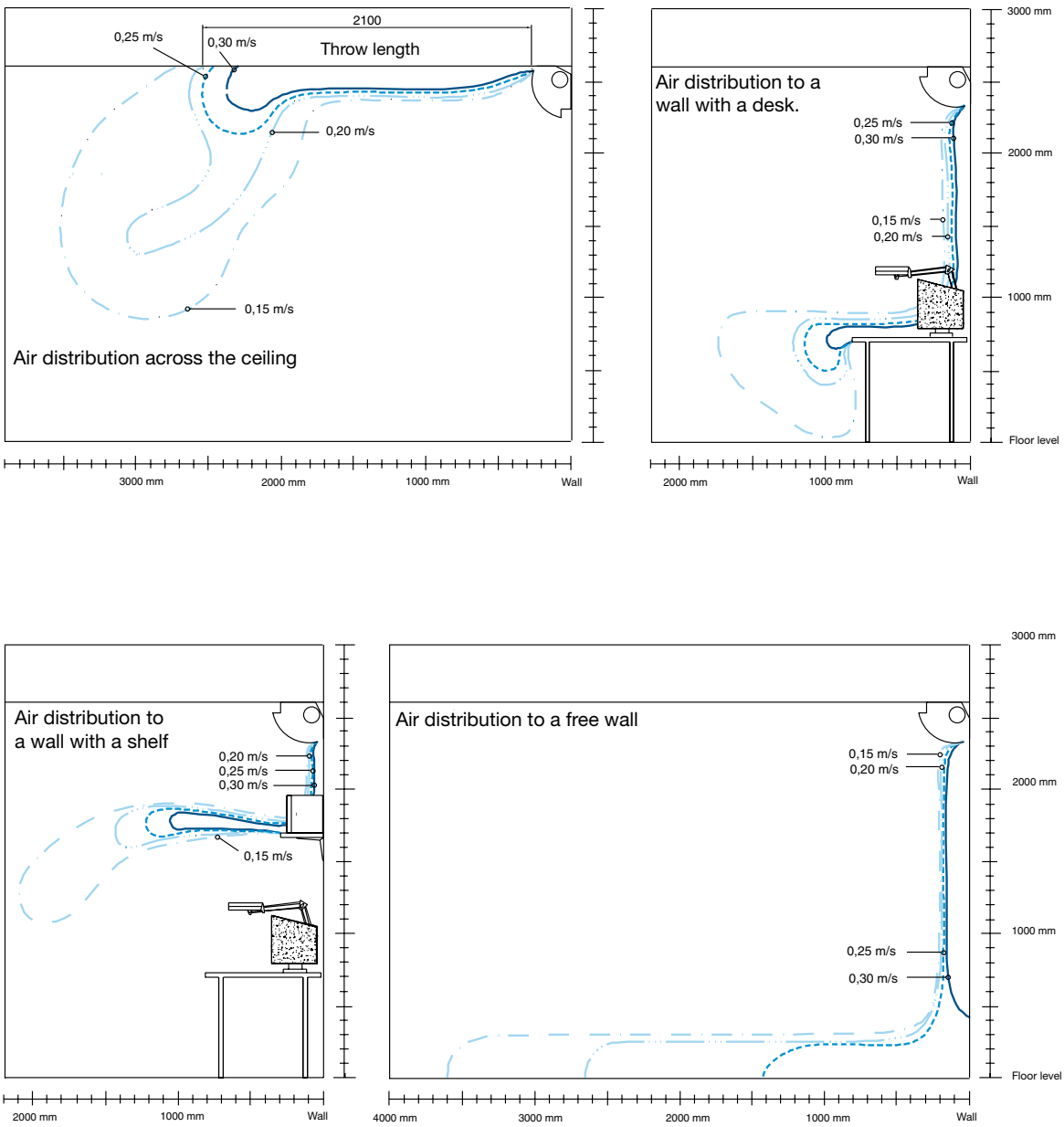

Figure 15. Air velocities below a supply air beam with airflow of 11 l/s per active metre and a standard distribution profile (nozzles angled 16°).

We reserve the right to make changes

Supply air beam Plafond

Distribution diagrams

The measurements were conducted with cooled supply air (Δt room air – supply air) of 5° C and cooling in the water circuit (Δt – room air – mean water temperature) of 8° C. All heat supplied through the walls.

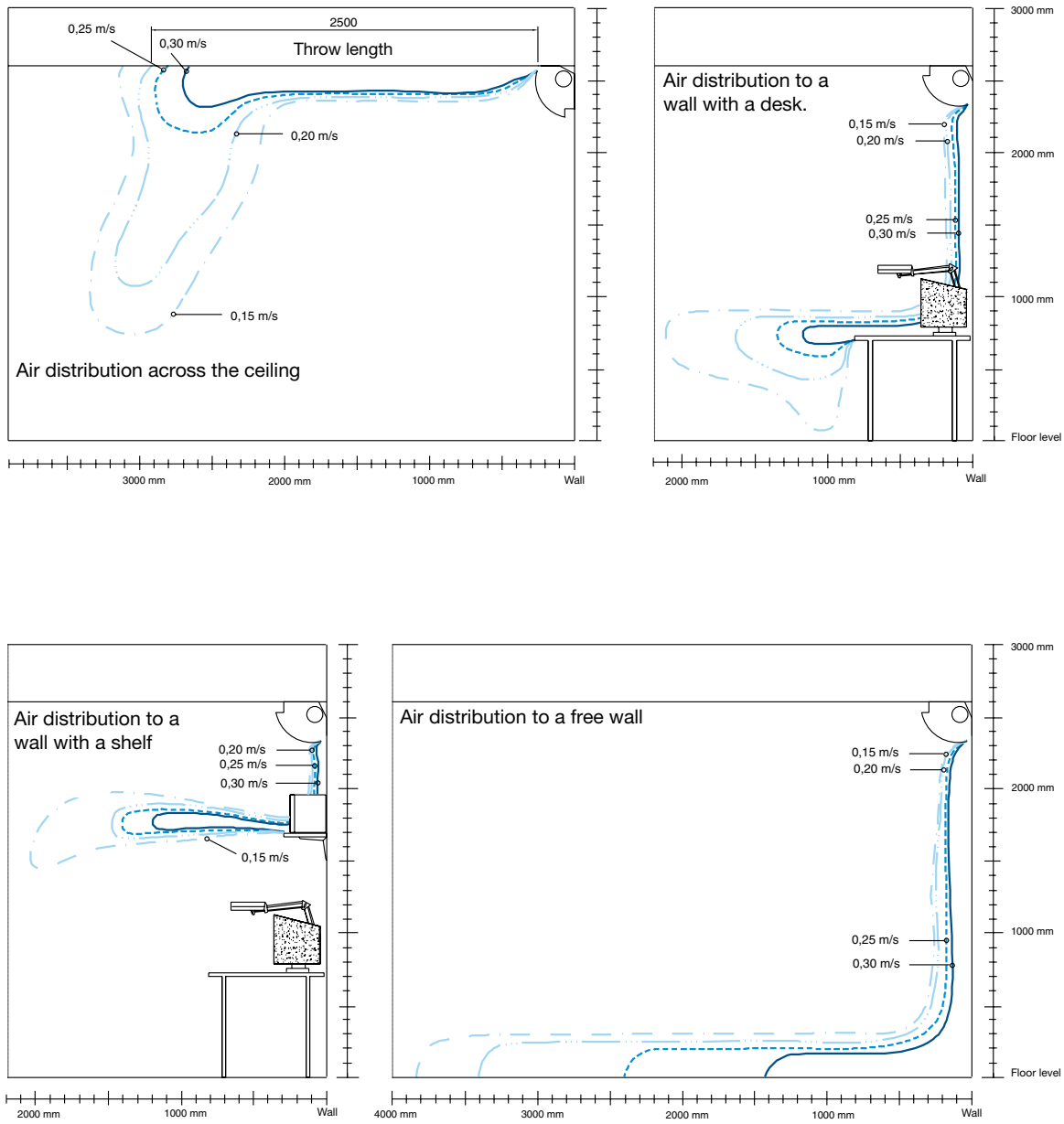

Figure 16. Air velocities below a supply air beam with airflow of 14 l/s per active metre and a standard distribution profile (nozzles angled 16°).

Supply air beam Plafond

Pressure drop in water circuit, cooling and heating

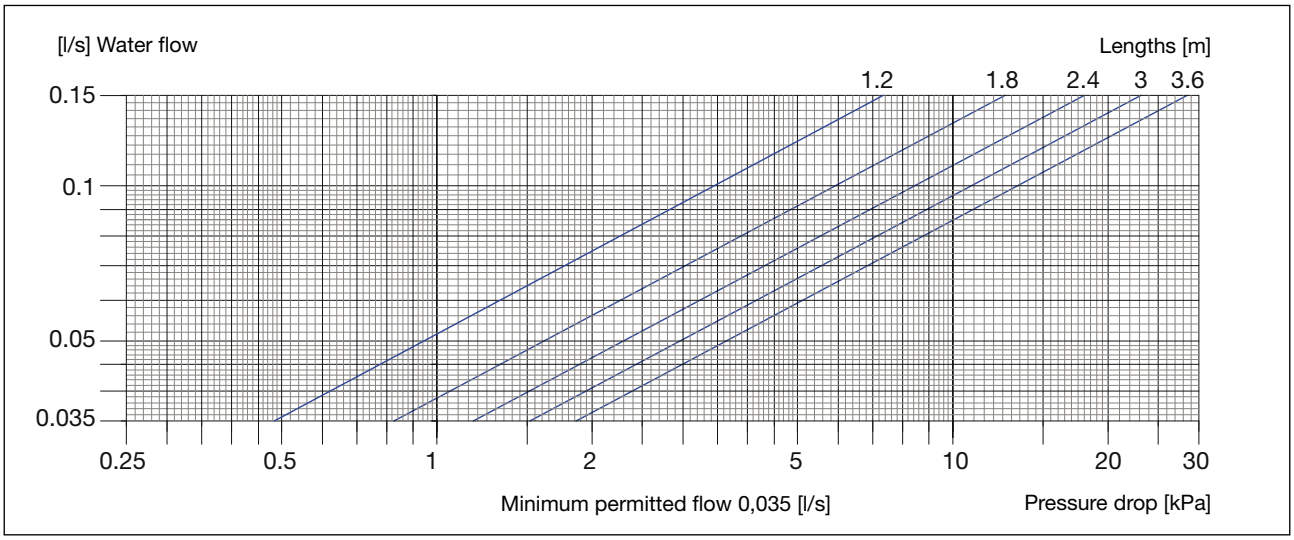

Diagram 4. Pressure drop in water circuit, cooling.

$q_w = P / (C_p \times \Delta t)$

q_w = *water flow [l/s]*
P = effect [W]
C_p = *specific heat capacity [J/(kg·K)]*
Δt = *temperature difference in the water circuit in/out [K]*

Example:

Plafond 2.4 m which supplies an output of 619 W
$\Delta t = 3$ *K*
$q_w = 619 / (4200 \times 3) = 0.049$ *l/s*
The pressure drop in the water circuit in diagram 4 is read off as 2.2 kPa.

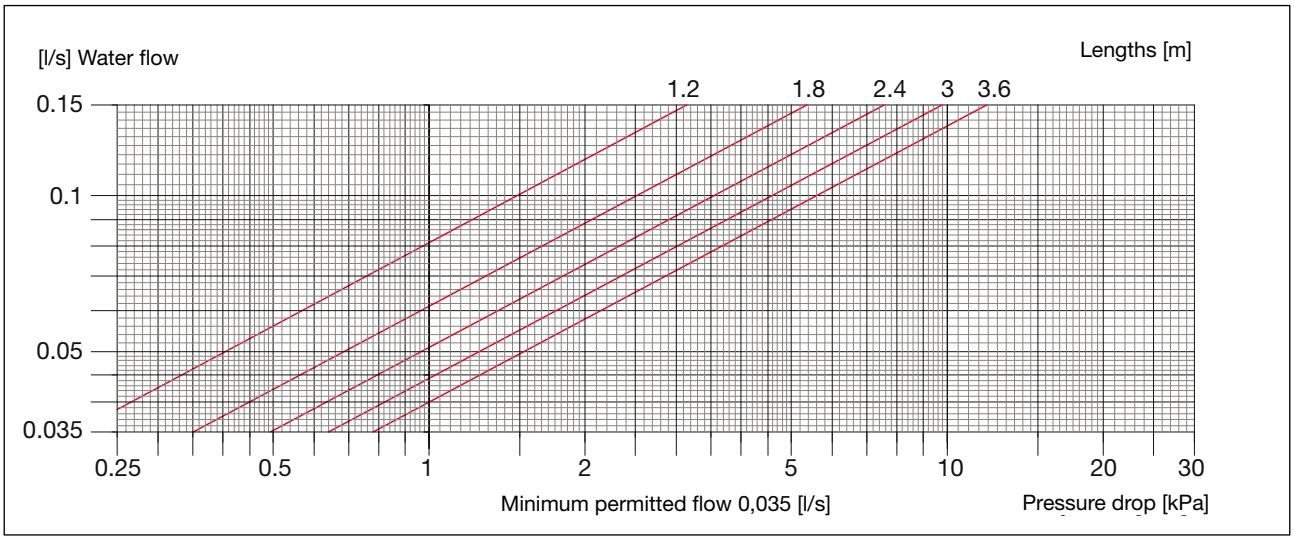

Diagram 5. Pressure drop in water circuit, heating.

$q_w = P / (C_p \times \Delta t)$

q_w = *water flow [l/s]*
P = effect [W]
C_p = *specific heat capacity [J/(kg·K)]*
Δt = *temperature difference in the water circuit in/out [K]*

Example:

Plafond 2.4 m which supplies an output of 1585 W
$\Delta t = 10$ *K*
$q_w = 1585 / (4200 \times 10) = 0.038$ *l/s*
The pressure drop in the water circuit in diagram 5 is read off as 0.6 kPa.

We reserve the right to make changes

Supply air beam Plafond

Control

Lindab offers control equipment that is very simple to use. To avoid heating and cooling being activated at the same time, the systems are controlled sequentially (Regula Combi). It is also possible to control only the heating or the cooling (Regula Mono). For the technical data, refer to the chapter Regula.

Colour

Plafond is powder-coated in white as standard, RAL 9010, gloss value 30. Other colours may be ordered specially.

Designations

Product/Version:	Plafond
Type:	B, C, D
Connection diam. water, [mm]:	15
Connection diam. air, [mm]:	100
Coupling options:	Air: A, B
	Water: 1, 2, 3
	Direction of air injection: L/R
Length, [m]:	Length in metres
Air quantity, [l/s]:	Must always be specified)
Nozzle pressure, [Pa]:	Must always be specified)
Distribution profile:	Standard (30°)
	Medium (16°)
	Long (0°)
Plus features:	See page 258

Programme text

Supply air beams from Lindab	**Qty**
Product:	
Plafond-B-15-100-A1R-1.8 m	40
Air quantity:	20 l/s
Nozzle pressure:	60 Pa
Distribution profile:	Medium (16°)
Plus features:	
Drypac:	
Regula Secura:	
Control valve, cooling:	
Actuator, cooling:	
Accessories:	
Regula Combi:	40
Product:	
Plafond-C-15-100-B2L-3.0	20
Air quantity:	30 l/s
Nozzle pressure:	60 Pa
Distribution profile:	Short (30°)
Plus features:	
Drypac:	
Heating:	
Regula Secura:	
Control valve, cooling:	
Actuator, cooling:	
Control valve, heating:	
Actuator, heating:	
Air vent:	
Accessories:	
Regula Combi:	20
Side cover 1200 mm:	2

Supply air beam

Podium

Contact, Overview, Index	1
Guideline heating and cooling	2
Plexus	3
Professor	4
Pilot	5
Architect	6
Polaris I & S	7
Plafond	8
Podium	**9**
Celo	10
Cabinett	11
Capella	12
Carat	13
Fasadium	14
Atrium H & C /Loggia	15
Regula	16
Drypac™	17
Lighting	18
TEKNOsim	19

© 05.2009 Lindab Ventilation A/S. All forms of reproduction without written permission are forbidden. Lindab® is the registered trademark of Lindab AB.
Lindab's products, systems, product and product group designations are protected by intellectual property rights (IPR).

Supply air beam Podium

Use

Lindab's supply air beam Podium is the lightest supply air beam available on the market. Podium is Capella's sister product; the difference between the two beams is that Podium also uses supply air.

Podium is mounted on the ceiling and supplies cooling through natural convection and radiation, which results in a draught-free climate.

35% of the cooling supplied by Podium comes from radiation and the rest from convection. Compared to a conventional beam, Podium provides a significantly higher cooling effect at lower room temperatures.

Podium can be provided with the following features: Regula Secura condensation guard, valves and actuators, etc. Podium offers many possibilities and great flexibility; , for example, you can have Podium coated in any colour you want.

Installation

Podium is installed either suspended or recessed in a ceiling.

Podium can be delivered with different connection alternatives. The connection dimensions depend on if the chilled beams are to be installed individually or in series.

Worth noting

Podium is the lightest supply air beam available on the market, a beam 6.0 m long, with a width of 53 cm and a weight of only 28.8 kg. Podium has flat and easily accessible surfaces, which helps maintain a good indoor hygiene. Furthermore, the height of Podium is only 130 mm, which contributes to its great freedom of placement. Lindab's supply air beams are Eurovent-certified and tested according to EN-15116 and EN-14518.

Key figures

Length:	1.2 – 6.0 m
Width:	170 mm (17) 350 mm (35) and 530 mm (53)
Height:	130 mm
Capacity:	Cooling effect of up to 866 W
	Air quantity of up to 40 l/s

Supply air beam Podium

Function

Podium has two functions, in part a supply air terminal, and in part a chilled beam. The supply air is fed and distributed inside the supply air beam. The air then passes through the gills on the bottom of the beam and ventilates the room. With its design, Podium scores a very high air-change efficiency value. Tests show that the supply air beam has an air-change efficiency of 64%, which is high compared to other methods of supplying air.

When cold-water passes through Podium, both the warm air from the room and the supply air is cooled on the beam's cold surfaces. A considerable mixing of warm room air takes place inside the supply air beam, which means that the temperature of the supply air released from the beam rises. The mixed air then streams through the supply air beam and down into the room. This leads to air circulation in the room, where warm air from the room is continually replaced by cooler air.

There are two decisive factors characterising Podium.

1. Low draught risk: Compared to other brands, Lindab's world-patented technology provides direct heat exchange between the cold surfaces of the beam and the warm surfaces of the room via low-temperature radiation. The radiation quotient for Podium is approx. 30 to 35 % of the total effect. This is a high radiation quotient compared to conventional beams with finned batteries, and this means that the convective share of the cooling effect is lower with Podium. With a given airflow, this results in a higher supply air temperature after the air has passed through the beam. This means that the risk of draughts under the beam is low.
2. Flexible placement: The supply air is fed to the room from the bottom of the beam. This results in a low draught risk. The design also allows the units to be installed at a distance of only 300 mm from each other. Conventional supply air beams normally require a significantly greater separation. This means that Podium offers increased flexibility and freedom of choice with regard to size, number and placement of beams, walls and other fittings in the room.

Design

The Podium's design is based on Lindab's world-patented method of metallurgically bonding copper and aluminium. The aluminium plate that constitutes the cooling fin is also metallurgically bonded to the copper pipe that transports the cold water. The shape of the copper pipe allows the easy creation of turbulent currents. This, together with the contact between the copper and the aluminium, boosts to the maximum the energy transport from the cooling surfaces to the cooling water.

The metallurgical bond between the copper and the aluminium also eliminates any risk of galvanic corrosion that could possibly be caused by condensation on the surfaces. The supply air can also be fed via a damper, which is supplied as an optional accessory.

The water pipes are made of copper. Nevertheless, the water should be oxygen-free to prevent corrosion.

Picture 1. Podium 17, 35 and 53.

We reserve the right to make changes

Supply air beam Podium

Versions

Size: Podium is produced in three different widths - 170 (width 17), 350 (width 35) and 530 mm (width 53), all of which have a height of 130 mm.

Lengths: Podium is available in lengths from 1.8 m to 6.0 m in steps of 0.1 m.

Water connection: Podium can be supplied with four connections, depending on the width of the product – 10, 12, 15 and 22 mm. This is to allow adjustment of the pressure drop and thus to ensure turbulent flow in different dimensioning cases. The heating pipes always have plain ends, o.d. 10 mm.

Air connection: Ø 100 mm.

Surface treatment: Podium is powder-coated as standard in RAL 9010.

Plus features

Factory preinstalled.

Colour: Podium can be coated in different special colours.

Hygiene cover: A cover that prevents the formation of air currents in the space above the suspended ceiling. Available only for Podium 53 with an increased width of 592 mm.

Accessories

Delivered separately.

Control: Refer to the chapter Regula.

Damper: Ø 100 mm.

Wall connection option: Connection cover to conceal visible piping to a wall, or between beams (see figure 1). The cover plate, however, provides access to the pipe fittings and damper. Indicate the length when you place your order.

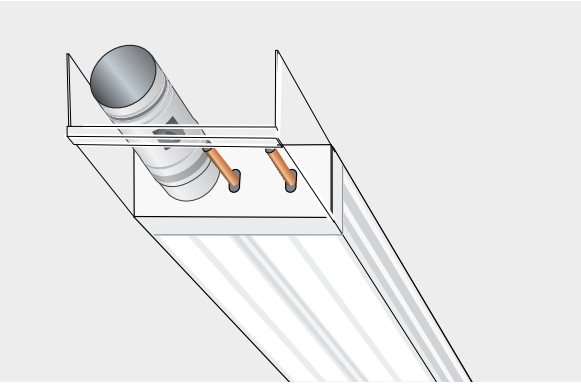

Figure 1. Podium 35 with connection cover.

Supply air beam Podium

Dimensioning

Cooling effect supplied by the ventilation air [W]

1. Start by calculating the necessary cooling effect that has to be supplied to the room to achieve a given temperature.
   Lindab's climate simulation program TEKNOsim is a great help here.
2. Calculate any cooling effect provided by the ventilation air.
3. The remaining cooling effect has to be supplied by the Podium.

Formula for the air cooling effect: $P = \dot{m} \times C_p \times \Delta t$

Where:
$\dot{m}$ = mass flow [kg/s]
C_p = specific heat capacity [J/(kg·K)]
q_p = air flow [l/s]
Δt = the difference between the room temperature and the temperature of the supply air [K].
It is usually $\dot{m} \times C_p \approx q_p \times 1{,}2$

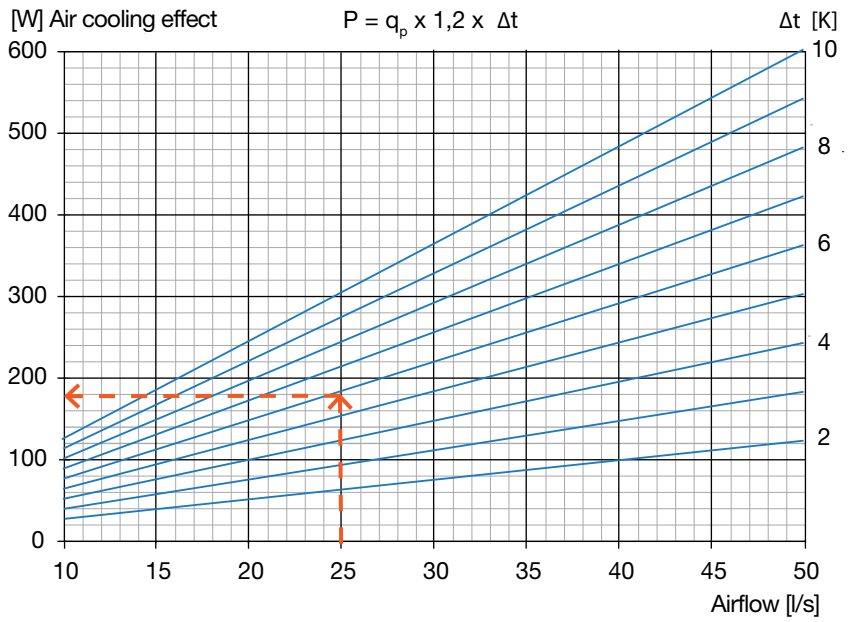

Diagram 1. Air cooling effect as a function of airflow. For example, if the air flow is 25 l/s and the under-temperature of the supply air is Δt = 6 K, the cooling effect from the graph is 180 W.

We reserve the right to make changes

Supply air beam Podium

Dimensioning

To calculate Podium's effect, follow the steps below.

1. Calculate Δt (room – average water)
2. Read off the effect with the selected airflow and the calculated Δt from one of tables 2 to 7.
3. Calculate the water flow with this effect.
4. Read off the number of parallel circuits in table 1, and calculate the flow per strip.
5. Use diagram 2, to read off the effect factor at the calculated water flow per strip.
6. Multiply the effect by the effect factor.
7. Repeat steps 5 and 6.

Example
What is the cooling effect of a 4.8 m Podium 53 with Ø15 water connection and 30 l/s?
The room's summer temperature is assumed to be 24.5° C
The cooling water temperature in/out of Podium is 14/17° C

Size	Model		
	17	35	53
Ø10	1	1	
Ø12	2	2	2
Ø15		4	3
Ø22			6

Table 1. Number of parallel circuits for Podium, depending on model and connection option.

Answer
Temperature difference Δt = room – mean water
Δt = 24.5 - (14+17) / 2 = 9 K

Read off the effect for Podium 53 in table 6. 4.8 Δt = 9K and the supply air velocity is 30 l/s. The value is 877 W.

Use the effect, which was read off, to calculate the water flow in Podium using the following formula:
$q_w = P / (Cp \times \Delta t)$.

Where:
q_w = water flow [l/s]
P = effect [W]
C_p= specific heat capacity [J/(kg·K)]
Δt = temperature difference in the water circuit in/out [K]

$q_w = 877 / (4200 \times 3) = 0.07$ l/s

In table 1, read off the number of parallel circuits for Podium 53 with Ø15 water connection. The value is 3. The water flow per strip will then be 0.07 / 3 = 0.023 l/s

The effect factor, which is read off from diagram 2, will then be 0.99 and the new effect
P = 877 x 0.99 = 868 W.

Calculate the new water flow, using the new effect
$q_w = 868 / (4200 \times 3) = 0.069$ l/s.

The water flow per strip will then be 0.069 / 3 = 0.023 l/s, and the effect factor 0.99.

The effect factor will then be 0.99 and the heating effect will be 868 W.

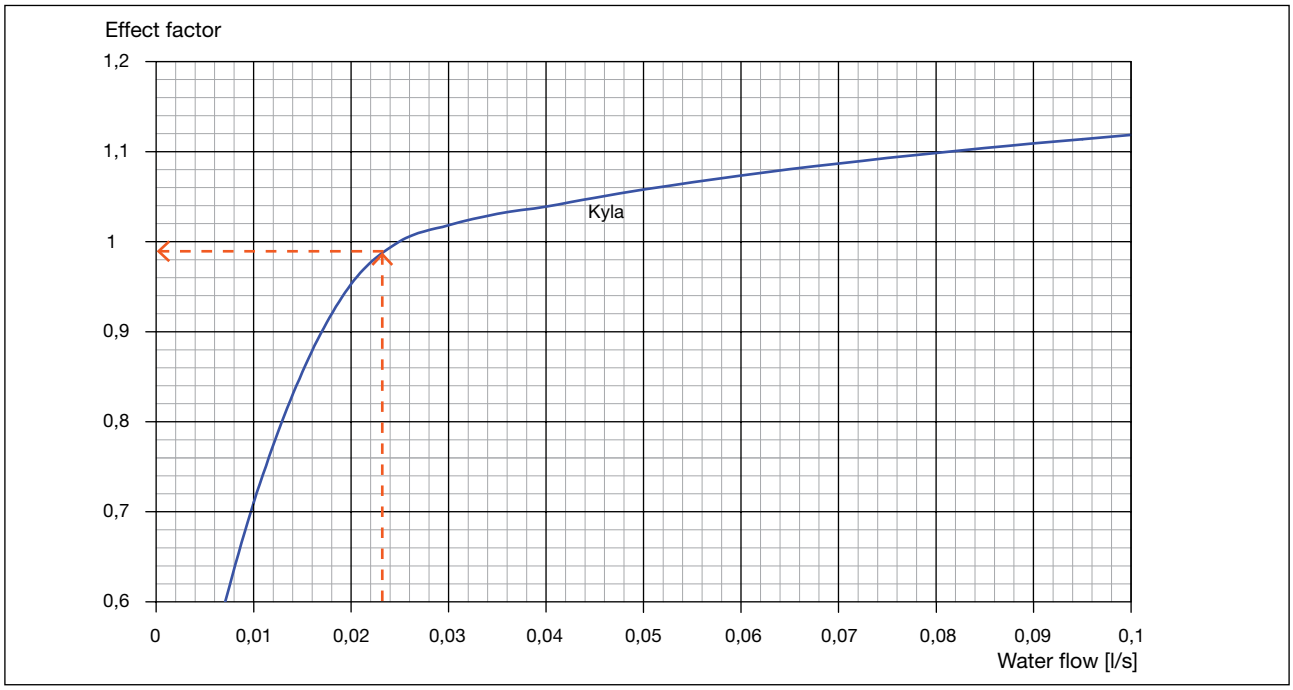

Diagram 2. Effect factor

Supply air beam Podium

Cooling effect

Lindab presents data measured with the V-method at SP, the Technical Research Institute of Sweden in Borås.

10 l/s and unit

Cooling effect per unit exclusive of the supply air's cooling effect (W) Mean water temperature - room temperature (°C)							
	6	7	8	9	10	11	12
Length (m)	**Width 17**						
1.8	50	61	79	95	113	133	155
2.4	67	81	105	127	151	177	207
3.0	83	102	132	158	188	222	258
3.6	100	122	158	190	226	266	310
4.2	117	142	184	222	264	310	362
4.8	133	163	211	253	301	355	413
5.4	150	183	237	285	339	399	465
6.0	167	203	263	318	377	443	517
Length (m)	**Width 35**						
1.8	103	128	153	180	205	230	266
2.4	137	171	204	240	273	307	355
3.0	172	213	255	300	342	383	443
3.6	206	256	306	360	410	460	532
4.2	240	299	357	420	478	537	621
4.8	275	341	408	480	547	613	709
5.4	309	384	459	540	615	690	798
6.0	343	427	510	600	683	767	887
Length (m)	**Width 53**						
1.8	173	211	252	297	338	378	427
2.4	231	281	336	396	451	504	569
3.0	288	352	420	495	563	630	712
3.6	346	422	504	594	676	756	854
4.2	404	492	588	693	789	882	996
4.8	461	563	672	792	901	1008	1139
5.4	519	633	756	891	1014	1134	1281
6.0	577	703	840	990	1127	1260	1423

Table 2. Cooling effects for Podium 17, 35 and 53 with a supply airflow of 10 l/s.

We reserve the right to make changes

Supply air beam Podium

Cooling effect

15 l/s and unit

Cooling effect per unit exclusive of the supply air's cooling effect (W) Mean water temperature - room temperature (°C)							
	6	7	8	9	10	11	12
Length (m)	**Width 17**						
1.8	54	68	86	104	124	148	169
2.4	72	91	115	139	165	197	225
3.0	90	113	143	173	207	247	282
3.6	108	136	172	208	248	296	338
4.2	126	159	201	243	289	345	394
4.8	144	181	229	277	331	395	451
5.4	162	204	258	312	372	444	507
6.0	180	227	287	347	413	493	563
Length (m)	**Width 35**						
1.8	113	140	167	196	225	252	288
2.4	151	184	223	261	300	336	384
3.0	188	233	278	327	375	420	480
3.6	226	280	334	392	450	504	576
4.2	264	327	390	457	525	588	672
4.8	301	373	445	523	600	672	768
5.4	339	420	501	588	675	756	864
6.0	377	467	557	653	750	840	960
Length (m)	**Width 53**						
1.8	176	216	259	304	350	392	441
2.4	235	288	345	405	467	523	588
3.0	293	360	432	507	583	653	735
3.6	352	432	518	608	700	784	882
4.2	411	504	604	709	817	915	1029
4.8	469	576	691	811	933	1045	1176
5.4	528	648	777	912	1050	1176	1323
6.0	587	720	863	1013	1167	1307	1470

Table 3. Cooling effects for Podium 17, 35 and 53 with a supply airflow of 15 l/s.

Supply air beam Podium

Cooling effect

20 l/s and unit

Cooling effect per unit exclusive of the supply air's cooling effect (W) Mean water temperature - room temperature (°C)							
	6	7	8	9	10	11	12
Length (m)	**Width 17**						
1.8	58	76	94	113	135	162	184
2.4	77	101	125	151	180	216	245
3.0	97	127	157	188	225	270	307
3.6	116	152	188	226	270	324	368
4.2	135	177	219	264	315	378	429
4.8	155	203	251	301	360	432	491
5.4	174	228	282	339	405	486	552
6.0	193	253	313	377	450	540	613
Length (m)	**Width 35**						
1.8	124	153	182	212	245	274	310
2.4	165	204	243	283	327	365	413
3.0	207	255	303	353	408	457	517
3.6	248	306	364	424	490	548	620
4.2	289	257	425	495	572	639	723
4.8	331	408	485	565	653	731	827
5.4	372	459	546	636	735	822	930
6.0	413	510	607	707	817	913	1033
Length (m)	**Width 53**						
1.8	180	221	266	311	360	407	455
2.4	240	295	355	415	480	543	607
3.0	300	368	443	518	600	678	758
3.6	360	442	532	622	720	814	910
4.2	420	516	621	726	840	950	1062
4.8	480	589	709	829	960	1085	1213
5.4	540	663	798	933	1080	1221	1365
6.0	600	737	887	1037	1200	1357	1517

Table 4. Cooling effects for Podium 17, 35 and 53 with a supply airflow of 20 l/s.

We reserve the right to make changes

Supply air beam Podium

Cooling effect

25 l/s and unit

Cooling effect per unit exclusive of the supply air's cooling effect (W) Mean water temperature - room temperature (°C)							
	6	7	8	9	10	11	12
Length (m)	**Width 17**						
1.8	61	83	101	122	146	176	198
2.4	81	111	135	163	195	235	264
3.0	102	138	168	203	243	293	330
3.6	122	166	202	244	292	352	396
4.2	142	194	236	285	341	411	462
4.8	163	221	269	325	389	469	528
5.4	183	249	303	366	438	528	594
6.0	203	277	337	407	487	587	660
Length (m)	**Width 35**						
1.8	135	166	196	229	264	295	331
2.4	180	221	261	305	352	393	441
3.0	225	277	327	382	440	492	552
3.6	270	332	392	458	528	590	662
4.2	315	387	457	534	616	688	772
4.8	360	443	523	611	704	787	883
5.4	405	498	588	687	792	885	993
6.0	450	553	653	763	880	983	1103
Length (m)	**Width 53**						
1.8	184	227	274	319	371	421	470
2.4	245	303	365	425	495	561	627
3.0	307	378	457	532	618	702	783
3.6	368	454	548	638	742	842	940
4.2	429	530	639	744	866	982	1097
4.8	491	605	731	851	989	1123	1253
5.4	552	681	822	957	1113	1263	1410
6.0	613	757	913	1063	1237	1403	1567

Table 5. Cooling effects for Podium 17, 35 and 53 with a supply airflow of 25 l/s.

Supply air beam Podium

Cooling effect

30 l/s and unit

Cooling effect per unit exclusive of the supply air's cooling effect (W) Mean water temperature - room temperature (°C)							
	6	7	8	9	10	11	12
Length (m)	**Width 17**						
1.8	67	86	106	130	153	182	207
2.4	89	115	141	173	204	243	276
3.0	112	143	177	217	255	303	345
3.6	134	172	212	260	306	364	414
4.2	156	201	247	303	357	425	483
4.8	179	229	283	347	408	485	552
5.4	201	258	318	390	459	546	621
6.0	223	287	353	433	510	607	690
Length (m)	**Width 35**						
1.8	146	178	212	248	286	320	369
2.4	195	237	283	331	381	427	492
3.0	243	297	353	413	477	533	615
3.6	292	356	424	496	572	640	738
4.2	341	415	495	579	667	747	861
4.8	389	475	565	661	763	853	984
5.4	438	534	636	744	858	960	1107
6.0	487	593	707	827	953	1067	1230
Length (m)	**Width 53**						
1.8	189	2.4	281	329	380	432	486
2.4	252	312	375	439	507	576	648
3.0	315	390	468	548	633	720	810
3.6	378	468	562	658	760	864	972
4.2	441	546	656	768	887	1008	1134
4.8	504	624	749	877	1013	1152	1296
5.4	567	702	843	987	1140	1296	1458
6.0	630	780	937	1097	1267	1440	1620

Table 6. Cooling effects for Podium 17, 35 and 53 with a supply airflow of 30 l/s.

We reserve the right to make changes

Supply air beam Podium

Cooling effect

40 l/s and unit

Cooling effect per unit exclusive of the supply air's cooling effect (W) Mean water temperature - room temperature (°C)							
	6	7	8	9	10	11	12
Length (m)	**Width 17**						
1.8	76	95	119	144	171	200	227
2.4	101	127	159	192	228	267	303
3.0	127	158	198	240	285	333	378
3.6	152	190	238	288	342	400	454
4.2	177	222	278	336	399	467	530
4.8	203	253	317	384	456	533	605
5.4	228	285	357	432	513	600	681
6.0	253	317	397	480	570	667	757
Length (m)	**Width 35**						
1.8	166	205	245	286	329	374	423
2.4	221	273	327	381	439	499	564
3.0	277	342	408	477	548	623	705
3.6	332	410	490	572	658	748	846
4.2	387	478	572	667	768	873	987
4.8	443	547	653	763	877	997	1128
5.4	498	615	735	858	987	1122	1269
6.0	553	683	817	953	1097	1247	1410
Length (m)	**Width 53**						
1.8	198	245	295	347	401	464	520
2.4	264	327	393	463	535	619	693
3.0	330	408	492	578	668	773	867
3.6	396	490	590	694	802	928	1040
4.2	462	572	688	810	936	1083	1213
4.8	528	653	787	925	1069	1237	1387
5.4	594	736	885	1041	1203	1392	1560
6.0	660	817	983	1157	1337	1547	1733

Table 7. Cooling effects for Podium 17, 35 and 53 with a supply airflow of 40 l/s.

Supply air beam Podium

Installation examples

Podium can be installed in two different ways. Suspended or recess mounted in a suspended ceiling (see figures 2 to 5).

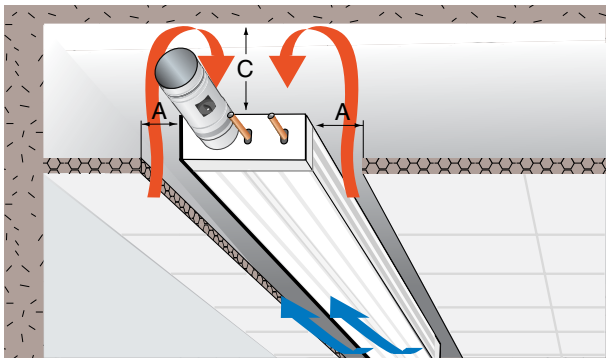

Figure 2. Installation dimensions when the room air reaches Podium from both sides.

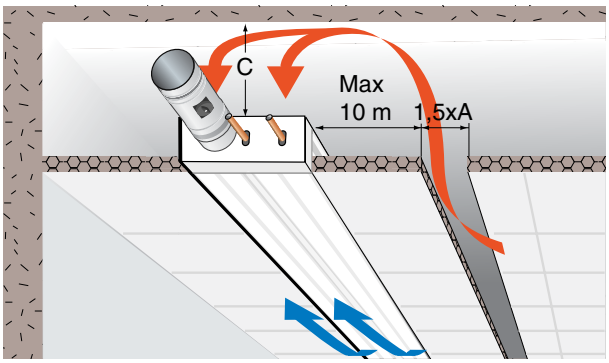

Figure 3. Installation dimensions when the room air only reaches Podium from one side.

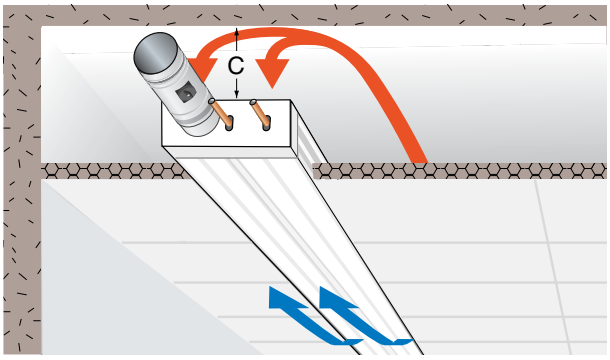

Figure 4. Installation dimensions when the room air reaches Podium from another opening in the suspended ceiling.

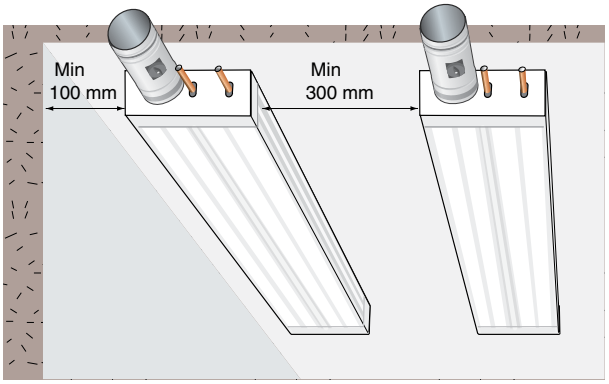

Figure 5. Minimum dimensions when two Podium beams are installed close to one another or near a wall.

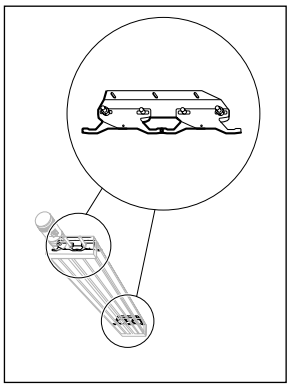

Figure 6. Installation directly on to the ceiling.

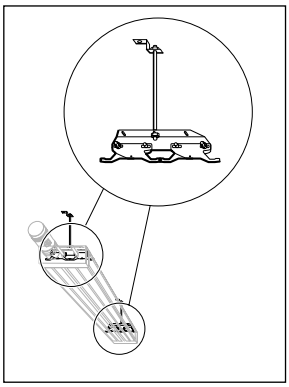

Figure 7. Suspended installation.

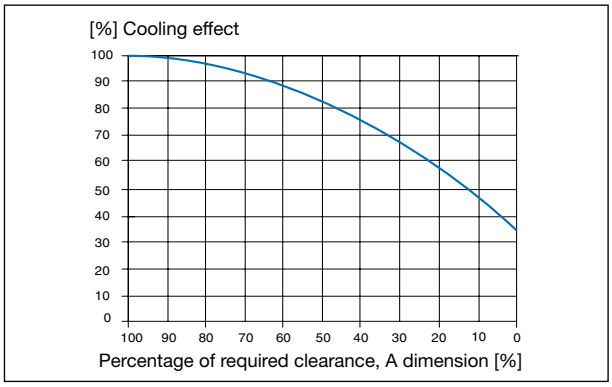

Diagram 3. Cooling effect with a reduced gap between the suspended ceiling and the supply air beam.

Installation dimensions						
	A			C		
Width	17	35	53	17	35	53
Figure 1	50 mm	70 mm	100 mm	60 mm	60 mm	80 mm
Figure 2	75 mm	105 mm	150 mm	90 mm	90 mm	120 mm
Figure 3	0.08 m²	0.11 m²	0.15 m²			
	Free opening area per m of Podium					

Table 8. Podium 17, 35 & 53 dimensions and installation.

We reserve the right to make changes

Supply air beam Podium

Couplings & connections

Width 17		Width 35		Width 53	
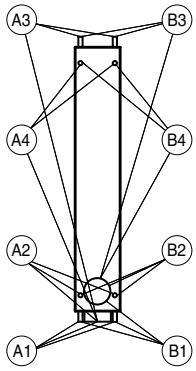		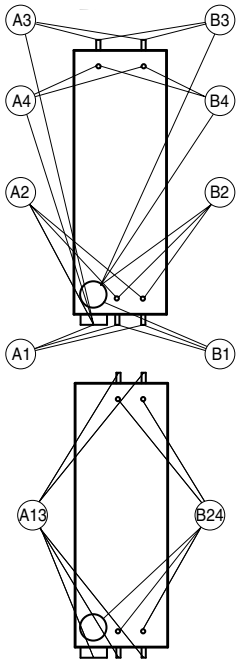		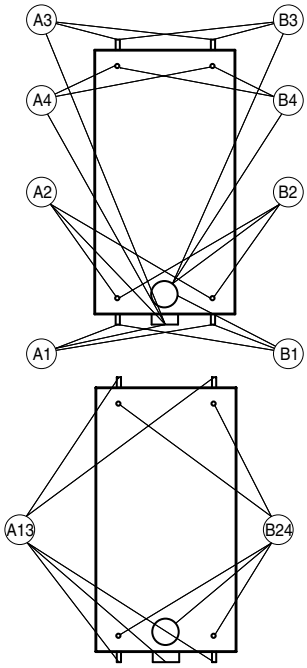	
Coupling options	Connection diameter	Coupling options	Connection diameter	Coupling options	Connection diameter
A1	10 12	A1	10 12 15	A1	12 15 22
A2	10 12	A2	10 12 15	A2	12 15 22
A3	10 12	A3	10 12 15	A3	12 15 22
A4	10 12	A4	10 12 15	A4	12 15 22
B1	10 12	A13	15	A13	22
B2	10 12	A14	15	A14	22
B3	10 12	A23	15	A23	22
B4	10 12	A24	15	A24	22
		B1	10 12 15	B1	12 15 22
		B2	10 12 15	B2	12 15 22
		B3	10 12 15	B3	12 15 22
		B4	10 12 15	B4	12 15 22
		B13	15	B13	22
		B14	15	B14	22
		B23	15	B23	22
		B24	15	B24	22

Podium from the side

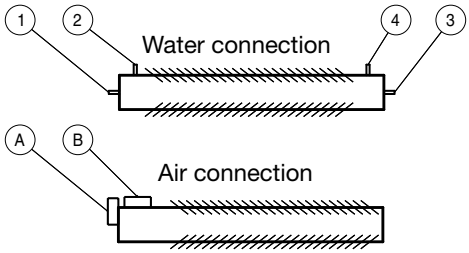

Because of the beam's "gills", its surface structure looks different, depending on the direction from which it is viewed. If products connected in series are to have the same appearance, the connection point should be oriented in the same way throughout the room. Note! Connection options 3 and 24 can be turned in both directions.

Table 9. Podium 17, 35 and 54 are supplied in lengths from 1.8 m to 6.0 m in steps of 0.1 m. The connection dimension for the water is 10, 12, 15 or 22 mm, and 100 mm for the air.

NB! Coupling should be with compression couplings, press couplings or Tectite.

Supply air beam Podium

Couplings & connections

Width 17	Width 35	Width 53
	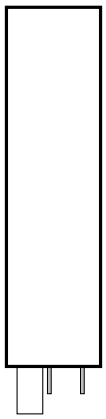	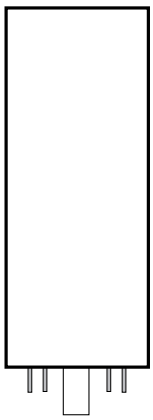
Water connection: plain Cu, pipe o.d., mm 10 12	Water connection: plain Cu, pipe o.d., mm 10 12 15	Water connection: plain Cu, pipe o.d., mm 12 15 22
Supply air connection: Spiral duct, Ø mm 100	Supply air connection: Spiral duct, Ø mm 100	Supply air connection: Spiral duct, Ø mm 100

Table 10. Overview of connection dimensions for water and supply air, Podium 17, 35 & 53.

We reserve the right to make changes

Supply air beam Podium

Width & height, mm

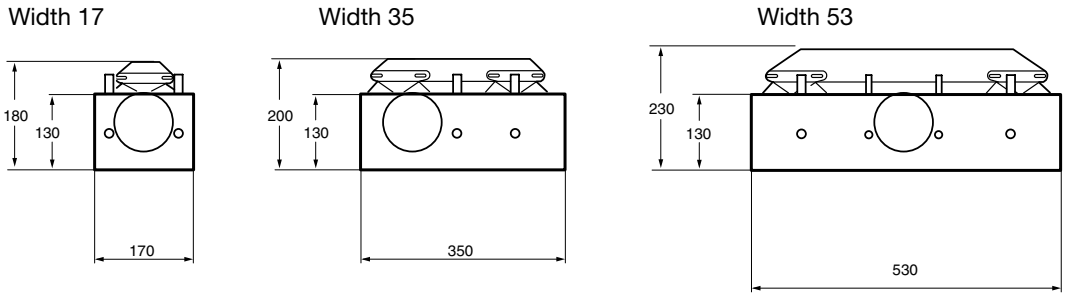

Figure 9. Podium 17, 35 and 53 are manufactured in three different widths and one height.

Length, m

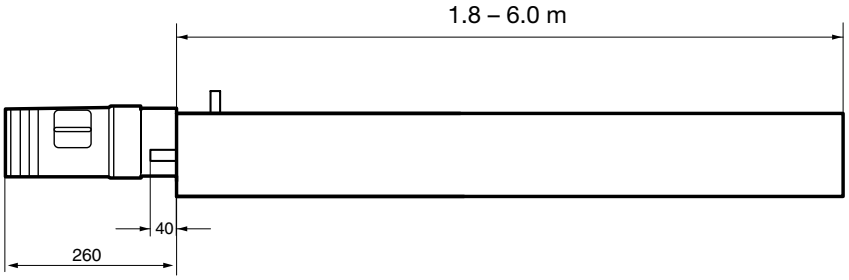

Figure 10. Podium 17, 35 and 53 are produced as standard in lengths from 1.8 m to 6.0 m in steps of 0.1 m. Actual dimensions are -8 mm in order to fit a standard T- support.

Dimensions, mm

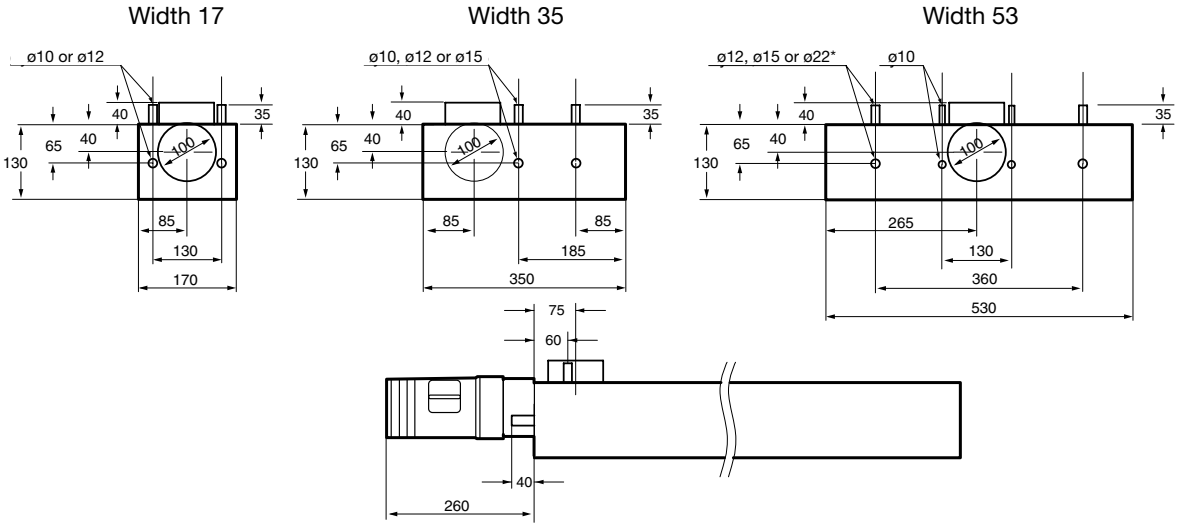

Figure 11. Podium 17, 35 and 53 dimensions.

Weight and water volume

Chilled beam width, cm	17	35	53
Weight, kg/m	1.7	3.2	4.8
Water content, l/m	0.25	0.50	0.75

Table 11. Podium 17, 35 & 53 weight and water volume.

Supply air beam Podium

Pressure drop in water circuit, cooling

Podium width 17 and 35

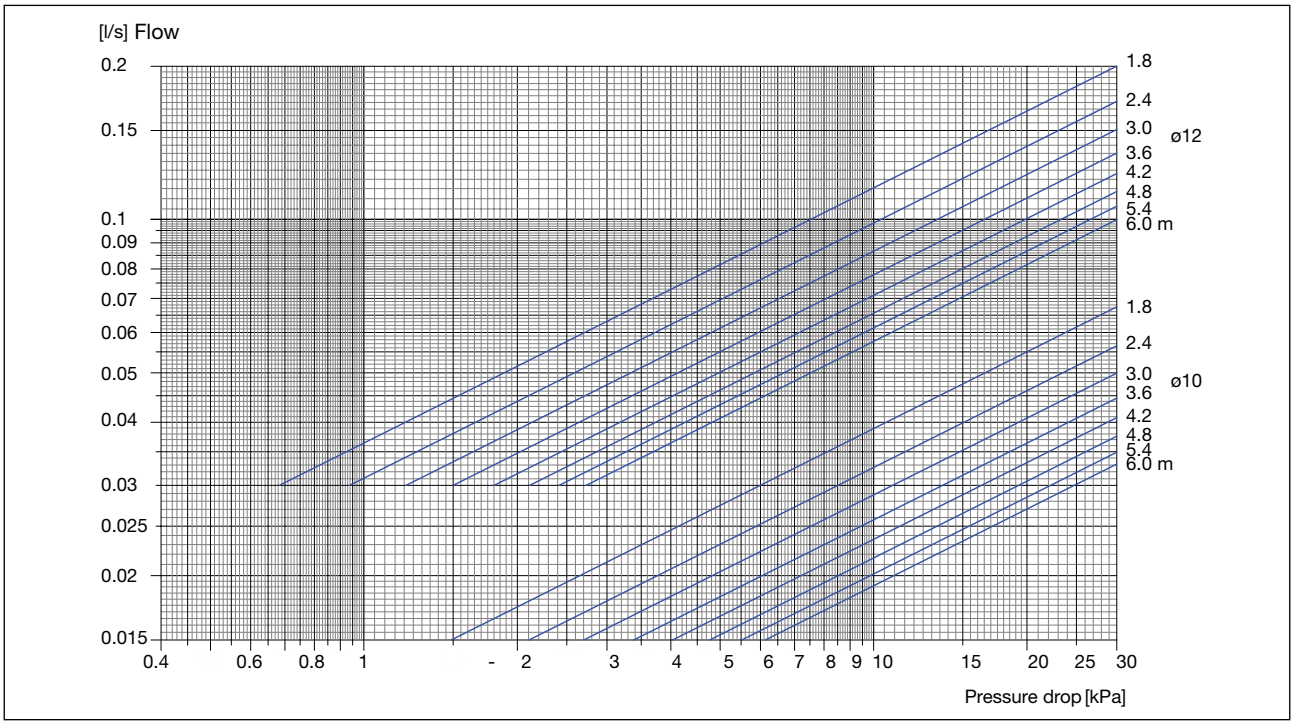

Diagram 4. Podium 17 pressure drop in water circuit, cooling.

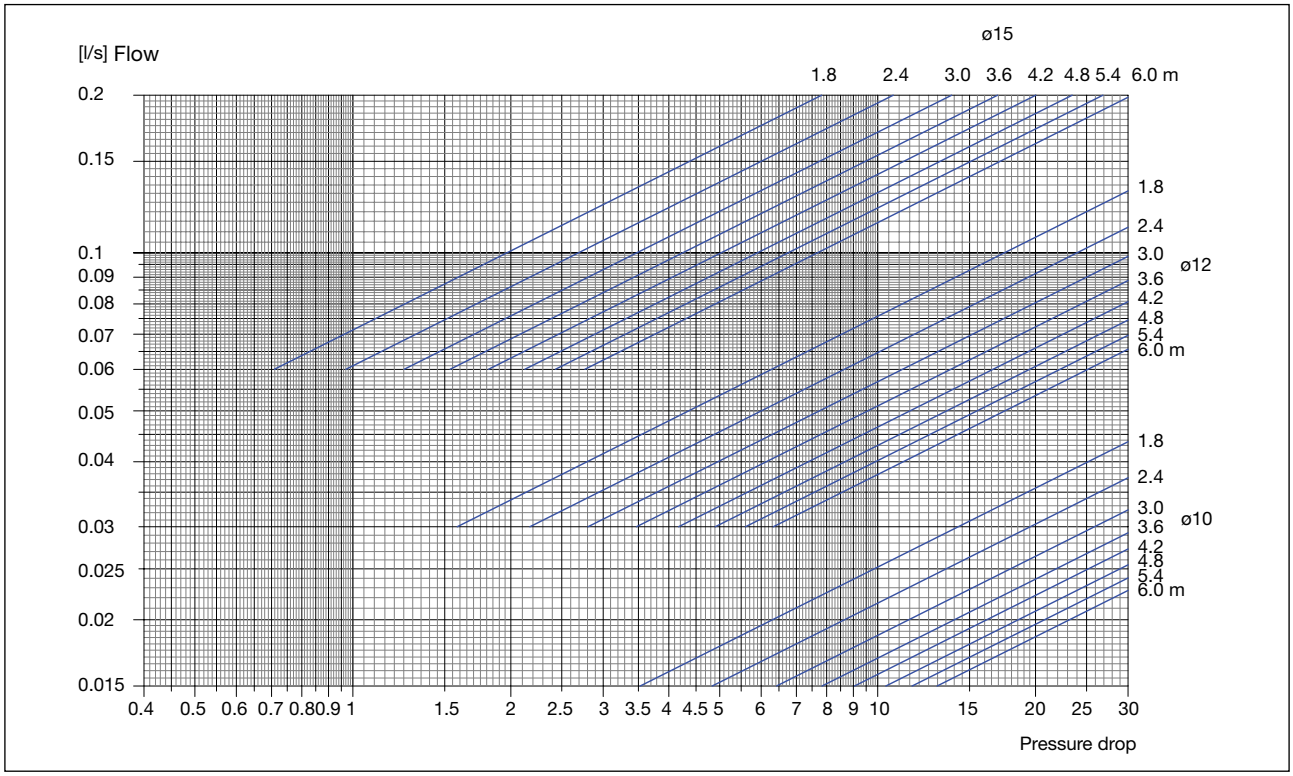

Diagram 5. Podium 35 pressure drop in water circuit, cooling.

We reserve the right to make changes

Supply air beam Podium

Pressure drop in water circuit, cooling

Podium width 53

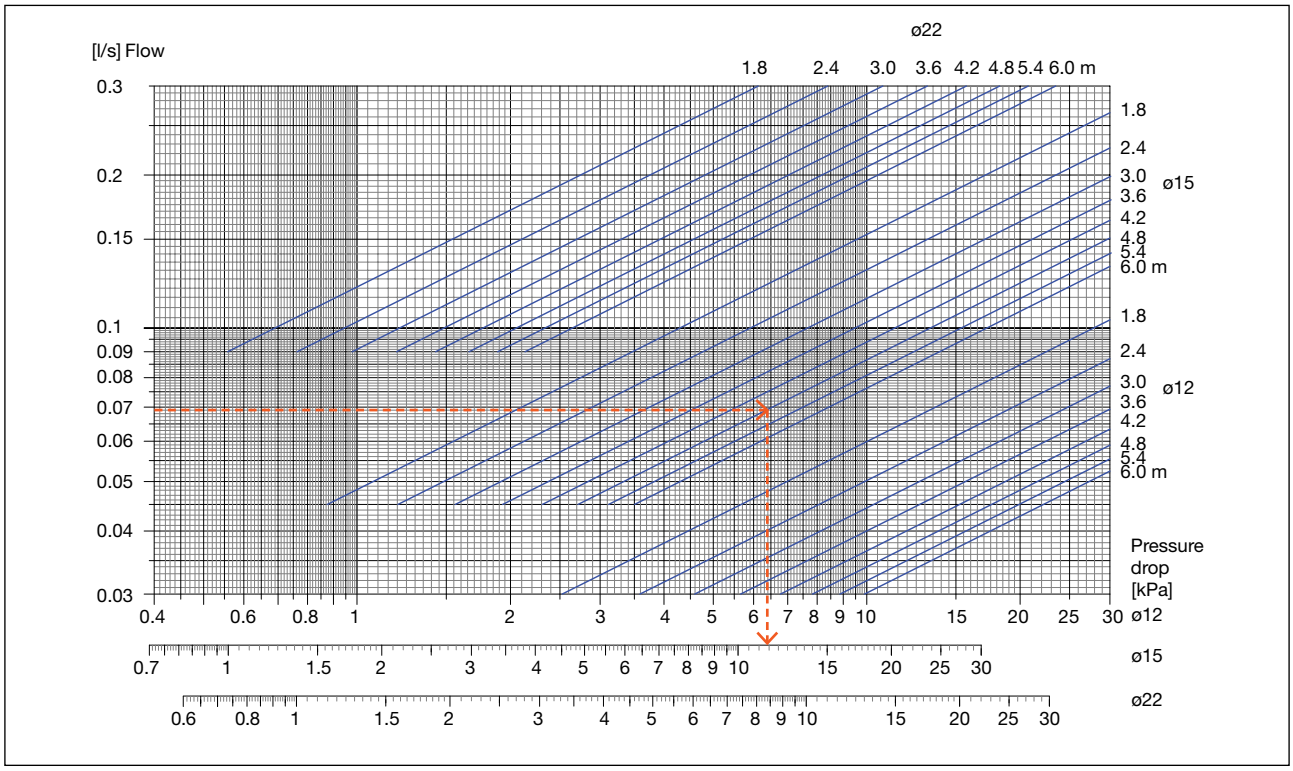

Diagram 6. Podium 53 pressure drop in water circuit, cooling.

$q_w = P / (C_p \times \Delta t)$

q_w = water flow [l/s]
P = effect [W]
C_p= specific heat capacity [J/(kg·K)]
Δt = temperature difference in the water circuit in/out [K]

Example:

Podium 4.8 m with Ø15 water connection gives an output of 868 W and Δt = 3 K.
qw = 868 / (4200 x 3) = 0.069 l/s
The pressure drop in the water circuit is read off as 11.4 kPa from diagram 6.

Supply air beam Podium

1
2
3
4
5
6
7
8
9
10
11
12
13
14
15
16
17
18
19

Control

Lindab offers control equipment that is very simple to use. To avoid heating and cooling being activated at the same time, the systems are controlled sequentially (Regula Combi). It is also possible to control only the heating or the cooling (Regula Mono). For the technical data, refer to the chapter Regula.

Colour

Podium is powder-coated as standard in white, RAL 9010, gloss value 30. Other colours may be ordered specially.

Designations

Product:	Podium
Width, [cm]:	17, 35, 53
Connection diam. water, [mm]:	10, 12, 15, 22
Connection diam. air, [mm]:	100
Coupling options:	A1, A2, A3, A4, A13, A14, A23, A24 B1, B2, B3, B4, B13, B14, B23, B24
Length, [m]:	1.8 - 6.0
Plus features:	See page 287

Programme text

Supply air beams from Lindab	**Qty**
Product:	
Podium - 17 - 10 - 100 - A1 – 3.0 m	18
Plus features:	
Colour, RAL 9005 (black):	
Accessories:	
Balancing dampers:	18
Connection cover, length = 100 mm:	18
Product:	
Podium - 35 - 12 - 100 - A1 – 2.4 m	6
Accessories:	
Balancing dampers:	6
Regula Combi:	6
Regula Secura:	6
Control valve, cooling:	6
Actuator, cooling:	6
Product:	
Podium - 53 - 15 - 100 - A2 – 4.2 m	2
Plus features:	
Colour, RAL 9005 (black):	
Accessories:	
Balancing dampers:	2
Connection cover, length = 100 mm:	2
Regula Combi:	2
Regula Secura:	2
Control valve, cooling:	2
Actuator, cooling:	2

We reserve the right to make changes

Supply air beam

Celo

Contact, Overview, Index	1
Ceiling Heating/Chilled	2
Plexus	3
Professor	4
Pilot	5
Architect	6
Polaris I & S	7
Plafond	8
Podium	9
Celo	10
Cabinett	11
Capella	12
Carat	13
Fasadium	14
Atrium H & C /Loggia	15
Regula	16
Drypac™	17
Lighting	18
TEKNOsim	19

© 03.2009 Lindab Ventilation A/S. All forms of reproduction without written permission are forbidden. Lindab® is the registered trademark of Lindab AB.
Lindab's products, systems, product and product group designations are protected by intellectual property rights (IPR).

Supply air beam

Celo

Use

Lindab has developed a supply air beam, Celo, which can be installed above a suspended ceiling.

Thus, you can conceal the ventilation and cooling features and create an unbroken ceiling without visible technical installations. The Celo concept has been developed together with Ecophon, which provides acoustic ceilings adapted for the system.

Installation

Celo is installed above the suspended ceiling. The system requires open slits in the suspended ceiling for the cooled air to exit and for the intake of warm air from the room to the chilled beam.

Worth noting

Celo is based on a unique technology, patent applied for, where the cooled air is carried down through an outlet slit in the suspended ceiling, then along the wall and down towards the floor. The cooled air has a fan-shaped distribution, which ensures low air velocities in the occupied area. Lindab's supply air beams are Eurovent-certified and tested according to EN-15116 and EN-14518.

Key figures

Capacity: Cooling effect of up to 695 W
Air quantity of up to 20 l/s

Supply air beam

Celo

1
2
3
4
5
6
7
8
9
10
11
12
13
14
15
16
17
18
19

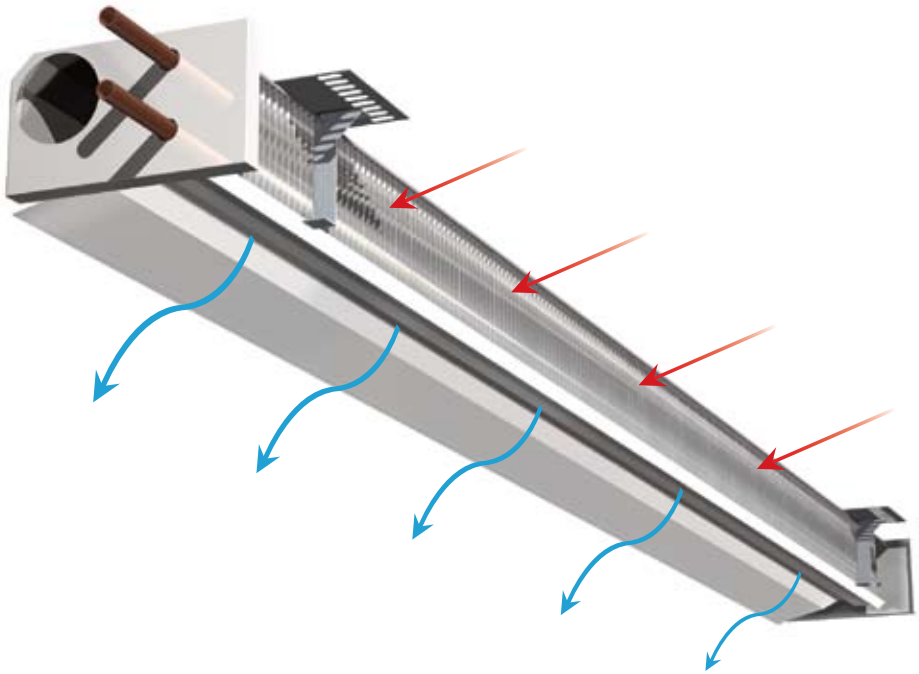

Picture 1. Celo is based on the induction principle.

Function

Patent-applied-for technology guarantees a good indoor climate

Celo consists of a supply air beam (see picture 1), which is placed above a suspended ceiling. Celo's technological solution is based on a unique technology (patent applied for), where the air is carried down through an outlet slit in the suspended ceiling, then along the entire wall and down towards the floor (see picture 2). The air has a fan-shaped distribution and all together, this ensures low air velocities in the occupied area.

The technology, where the clean cooled air is driven slowly down the wall towards the floor and where the exhaust unit is placed above the suspended ceiling, ensures good air-change efficiency in the room.

Construction

Celo is equipped with a vertical battery and a lateral air duct. There is an air connector on each end of the beam, and one of these is used for connecting the air. A cleaning hatch, with a handle, is placed on the unused connection, Lindab designation ESHU 80. The cleaning hatch provides access to the beam's air duct for cleaning and inspection. The product is supplied with factory-preset airflow and nozzle pressure.

The air is supplied to the room through Coanda nozzles placed along the air duct. The outermost nozzles have a sideways angle of 30°, an angle that decreases the closer the nozzles are to the centre. This creates a fan-shaped distribution pattern.

The nozzles are accessible for plugging from below, if you wish to change the pressure and flow pattern at a later time.

The water pipes are made of copper. Nevertheless, the water should be oxygen-free to prevent corrosion.

Picture 2. Celo's technical solution is based on a unique technology, patent applied for, where the cooled air is carried down through an outlet slit in the suspended ceiling, then along the wall and down towards the floor.

We reserve the right to make changes

Supply air beam

Celo

Concealed installations

Celo makes it easy to create a beautiful unbroken ceiling (see picture 3). Celo provides great freedom when designing a suspended ceiling (see Picture 4). The choice is between a wall-to-wall suspended ceiling with slits and a suspended island installation.

Supply air beams, exhaust air units, ventilation ducts and electrical installations are all placed above the suspended ceiling.

Simple installation and service

Installation of the Celo supply air beam is simple. Careful adjustment of the suspended ceiling is not required. When the installation engineer has finished installing the beam, the ceiling installer takes over; basically, the only thing he has to do is fit the ceiling.

Since the suspended ceiling panels can be easily dismantled, the supply air beams and the other technical installations are easily accessible for maintenance and service.

The many years of experience with conventional chilled beam systems, where the air is drawn through slits in the suspended ceiling and then brought back through a supply air beam placed at the centre of the room, prove that there is good hygiene above the suspended ceiling. The big difference with Celo is that the supply air beam is not visible!

Picture 3. Celo makes it easy to create a beautiful unbroken ceiling.

Picture 4. Celo provides great freedom for the design of the suspended ceiling.

Supply air beam

Celo

Data

Variants

Celo is installed above a suspended ceiling.

Lengths: Celo is available in lengths from 1.2 m to 3.6 m in steps of 0.3 m.

Water connection: The water connection is horizontal Ø 15 mm.

Air connection: The air connection is horizontal Ø 80 mm.

Nozzle angle: The standard angle of the nozzles is 30°.

Surface treatment: Celo is manufactured as standard from enamelled sheet metal, colour white, RAL 9010.

Airflow control: The product has a preset pressure drop value, so on-site adjustment is not necessary. A prerequisite is that the duct system in the building has a relatively low-pressure drop compared to the product. Where a damper is desired, you can order a balancing damper.

Plus features

Factory preinstalled.

Drypac™: Anti-condensation-treated cooling batteries that enable water temperatures below the dew point without condensation drips. Refer to the chapter Drypac.

Valves and actuators: Valves and actuators are fitted externally.

Regula Secura: Lindab's condensation guard, developed in-house, can be fitted into Celo. Refer to the chapter Regula.

Regula Connect: A connection card to provide flexibility when interconnecting chilled beams. The card can be mounted on the beam. Refer to the chapter Regula.

Air vent: An air vent is mounted on the return side of the connection pipe on the exterior of the product.

Accessories

Delivered separately.

Control: Refer to the chapter Regula.

Suspension wires: Suspension wires and Z-bars can be supplied for ceiling installation, 4 suspension points..

Threaded rods: Threaded rods can be supplied for installation in the ceiling. 4 suspension points.

We reserve the right to make changes

Supply air beam

Celo

Dimensioning

Cooling effect supplied by the ventilation air [W]

1. Start by calculating the required cooling effect that has to be supplied to the room to provide a certain temperature. Lindab's climate simulation program TEKNOsim is a great help here.
2. Calculate any cooling effect that is supplied by the ventilation air.
3. The remaining cooling effect is to be supplied by Celo.

Formula for the air cooling effect: $P = \dot{m} \times C_p \times \Delta t$

Where:
$\dot{m}$ = mass flow [kg/s]
C_p = specific heat capacity [J/(kg·K)]
q_p = air flow [l/s]
Δt = the difference between the room temperature and the supply air temperature [K].
It is usually $\dot{m} \times C_p \approx q_p \times 1.2$

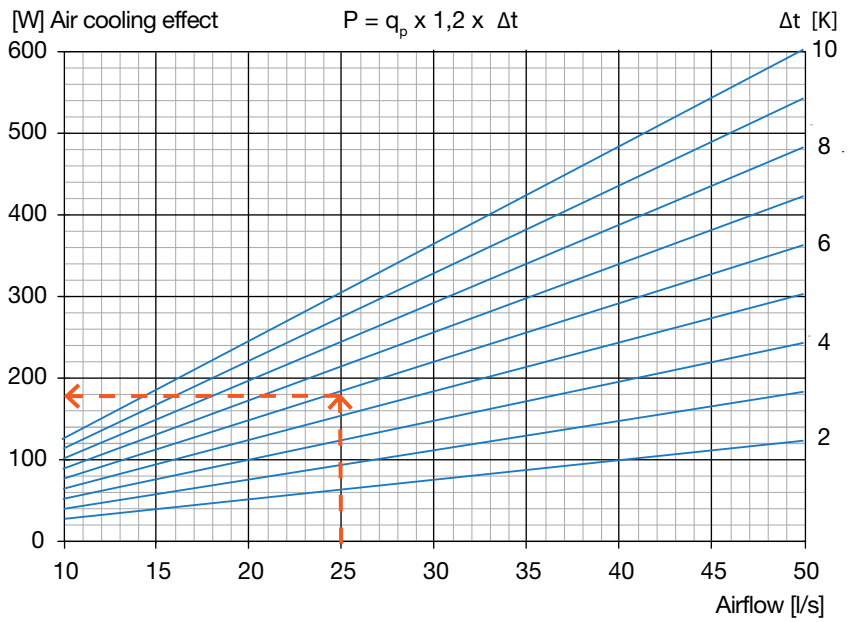

Diagram 1. Air cooling effect as a function of airflow. For example, if the airflow is 25 l/s and the under-temperature of the supply air is Δt = 6 K the cooling effect on the graph is 180 W.

Supply air beam Celo

Dimensioning

Effect diagram

Follow the instructions below, to read off the effect from the diagram.

1. Calculate Δt (room – average water)
2. Product length minus 0.2 m, to obtain the active length.
3. Divide the airflow by the active length. Enter the result on the horizontal axis of diagram 2.
4. Follow the flow line to the right pressure, then read off the effect per active metre and Kelvin.
5. Multiply the effect you read off by Δt.
6. Then, multiply by the active length.

Example 1

What is the cooling effect of a 3.6 m Celo with 20 l/s and a pressure of 80 Pa?
The room's summer temperature is assumed to be 24.5° C
The cooling water temperature in/out of Celo is 14/17° C

Answer
Temperature difference Δt = room – mean water
Δt = 24.5 - (14+17) / 2 = 9 K
Active length = 3.6 m - 0.2 m = 3.4 m
20 l/s / 3.4 m = 5.8 l/(s·m)

Read off from diagram 2: 17.2 W/(m·K).
Cooling effect (P) = 17.2 × 9 K × 3.4 m = 526 W

NB! The effect diagram applies for a nominal flow of 0.038 l/s.

To obtain the right effect at other flows, read off the effect factor from diagram 3 and multiply the effect, which is read off, by this factor (see example 2).

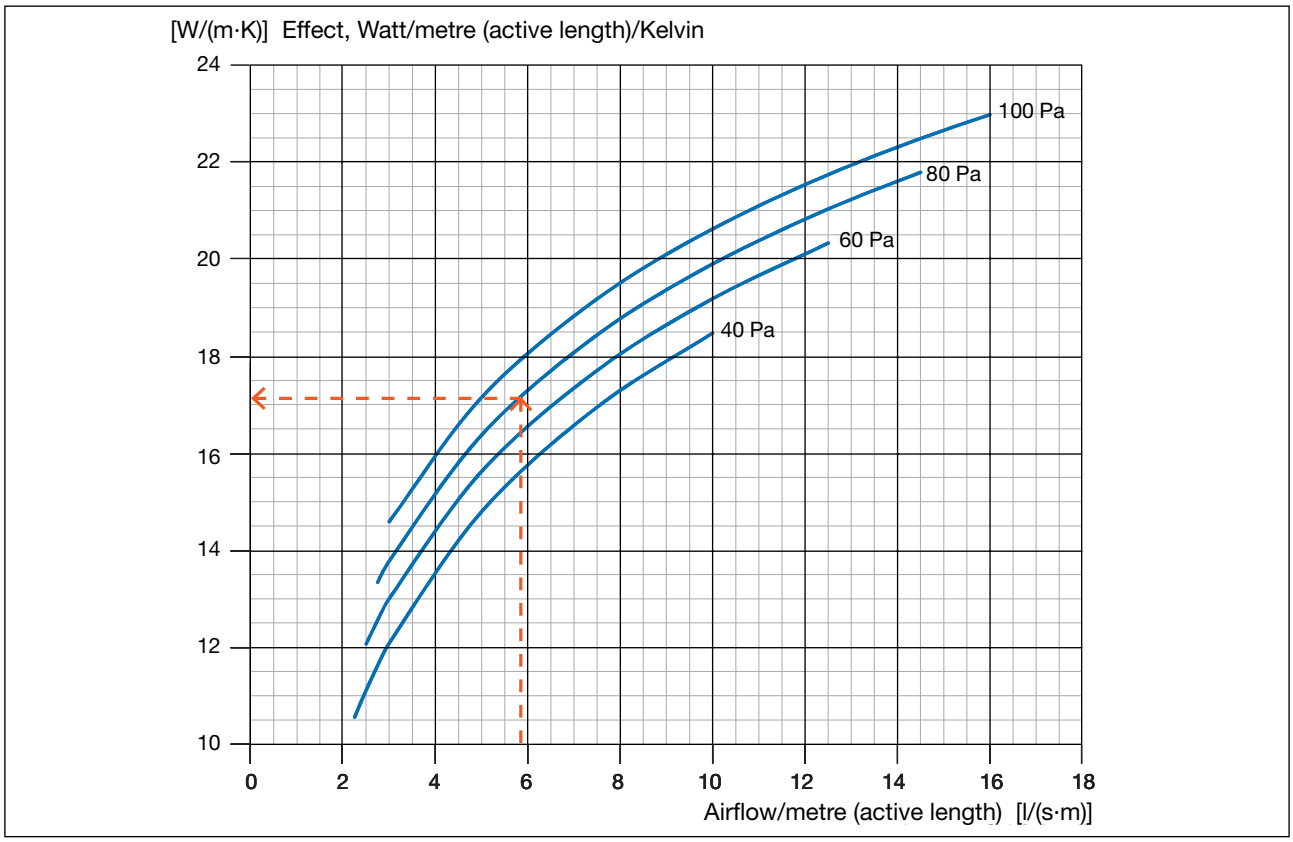

Diagram 2. Effect per active metre and Kelvin as a function of airflow per active metre with nozzle pressures of 40, 60, 80 and 100 Pa.

We reserve the right to make changes

Lindab®

Supply air beam Celo

Dimensioning

Flow-adjusted effect factor

Example 2

Read off the effect on the effect diagram and calculate your flow with the following formula: $q_w = P / (C_p \times \Delta t)$

Where:
q_w = water flow [l/s]
P = effect [W]
C_p= specific heat capacity [J/(kg·K)]
Δt = temperature difference in the water circuit in/out [K]

For example q_w = 526 / (4200 x 3) = 0.041 l/s

The effect factor will then be 1.015 (see diagram 3) and the new effect P = 526 x 1.015 = 534 W.

With a new cooling effect, a new water flow is calculated.
q_w = 534 / (4200 x3) = 0.042 l/s

The effect factor will then be 1.02 (see diagram 3) and the new effect P = 526 x 1.02 = 537 W.

With a new cooling effect, a new water flow is calculated.
q_w = 537 / (4200 x 3) = 0.043 l/s

The effect factor will then be 1.025 (see diagram 3) and the new effect P = 526 x 1.025 = 539 W.

With a new cooling effect, a new water flow is calculated.
q_w = 539 / (4200 x 3) = 0.043 l/s

The cooling effect is calculated to be 539 W.

Example 3

What is the cooling effect of two 3.6 m Celo beams with a water circuit connected in series, 20 l/s, and a nozzle pressure of 80 Pa?

Answer
Calculate the effect for one Celo, in the same way as in example 1. The value is 526 W. The total effect for two Celo beams connected in series will then be
2 x 526 = 1052 W.

Calculate the flow $q_w = P / (C_p \times \Delta t)$
q_w = 1052 / (4200 x 3) = 0.083 l/s.

The effect factor will then be 1.055 and the new effect P = 1052 x 1.055 = 1110 W.

With a new cooling effect, a new water flow is calculated.
q_w = 1110 / (4200 x 3) = 0.088 l/s

The effect factor will then be 1.06 and the new effect P = 1052 x 1.06 = 1115 W.

With a new cooling effect, a new water flow is calculated.
q_w = 1115 / (4200 x 3) = 0.088 l/s

The cooling effect for two Celo beams connected in series is calculated to be 1115 W.

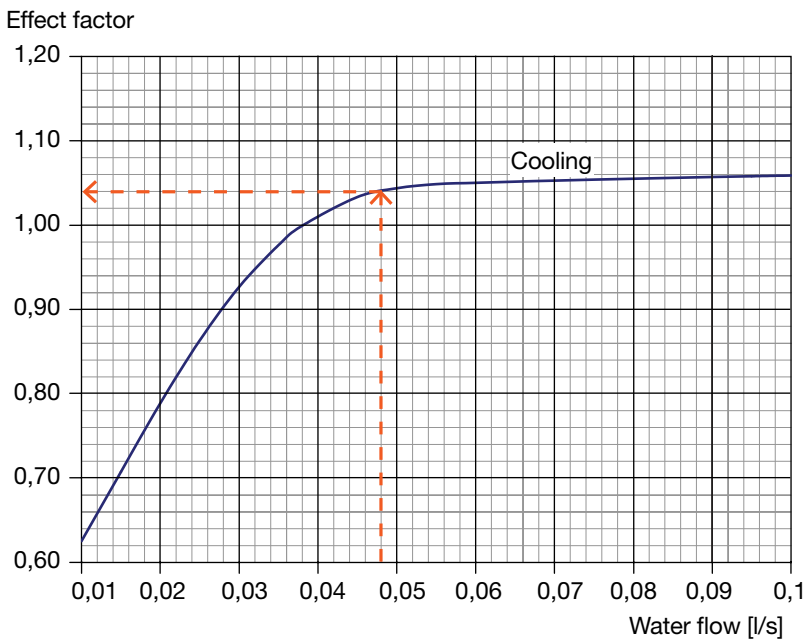

Diagram 3. Effect factor as a function of water flow.

Supply air beam

Celo

Determination of outlet and inlet slits

Definition of outer slit
A slit in the suspended ceiling, through which the cooled air from Celo is carried down into the room. The outlet slit is defined as the area 0.5 m on each side of the beam along the length of the beam. Outlet slit length = number of beams x (beam length + 1 m)

Outlet slit for wall-to-wall suspended ceiling with slits
The outlet slit must be at least 60 mm wide.

Outlet slit for suspended island installation
The outlet slit must be at least 240 mm wide. The width of the outlet slit affects the air velocity (see diagram 4).

Definition of inlet slit
A slit in the suspended ceiling, through which warm air from the room is carried up to Celo. The inlet slit is the slit that remains when the length of the outlet slit is subtracted from the total slit length of the room.
Inlet slit for wall-to-wall suspended ceiling with slits and suspended island installation
The surface of the inlet slit must be 0.1 m²/m of the active beam length for the system to provide the specified effects. Otherwise, you have to calculate the effect reduction using the reduction factor in diagram 4.

Definition of active beam length

Active beam length = total beam length - 0.2 m

Slit space for exhaust air
In balanced ventilation systems, i.e. where the volume of exhaust air is approximately the same as the volume of supply air, no extra slit space is required.

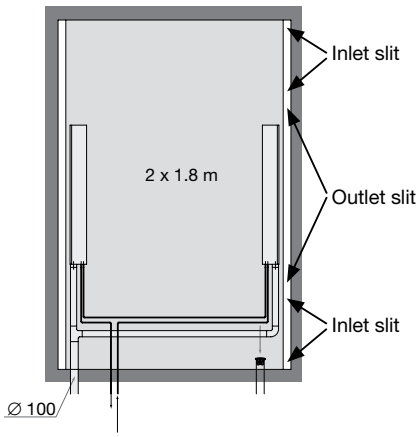

Figure 1. Two Celo beams with two open slits.

Determination of outlet and inlet slits

Example

A Celo system is to be installed in a room with the dimensions 4.5 × 2.4 m Two 1.8-m Celo beams have been selected to achieve the correct cooling effect. The water circuit for the beams is to be connected in series (see figure 1). The installation is carried out with one beam on each long side. What should be the width of the intake and outlet slits?

Inlet slit = total slit length - outlet slit
2 x 4.5 m - 2 x (1.8 m + 1 m) = 3.4 m

The surface of the inlet slit must be 0.1 m²/m of active beam length so as to prevent a reduction in the cooling effect:
Intake area = 0.1 m²/m × (2×1.6 m) = 0.32 m²

Calculate the width of the slit:
3.4 m × slit width = 0.32 m² = > slit width = 0.32 m² / 3.4 m = 0.094 m = 94 mm

Since the width of the outlet slit must be at least 60 mm, this requirement is also met.

Assume that the maximum width of the slit is 70 mm, what then will be the reduction in cooling effect?

Surface of inlet slit: 0.070 m × 3.4 m = 0.238 m²
0.238 m² /3.2 m = 0.074 m²/m of active beam length
Read off the reduction factor from diagram 4. The value is 0.97; i.e., the effect reduction is approx. 3%.

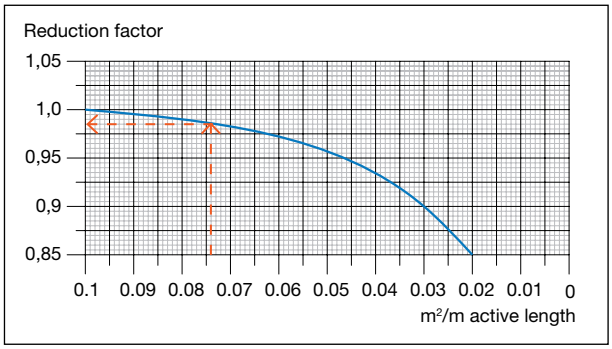

Diagram 4. Effect reduction due to reduced inlet slit.

We reserve the right to make changes

Lindab®

Supply air beam Celo

Cooling effect, Celo

Drypac™, condensation protection

Drypac™ is a condensation protection consisting of Perlite (volcanic stone), which is applied to the fin surfaces. Drypac™ has properties, which allow a feed temperature that is 4° C below the dew point, for continuous operation, and 5 to 8° C below dew point for limited periods. Drypac™ provides both an increased effect output and increased security against condensation drips. At a working temperature above the dew point, the output is reduced by 17 % but when the working temperature is below the dew point, there is no reduction in output. This means that the effect is highest when the need is greatest. For more information about Drypac™, refer to the chapter Drypac™.

Effect data

All table values are presented with flow-adjusted effects based on the Δt for Water out-in given in the table.

Lindab's supply air beams are Eurovent-certified and tested according to EN-15116, EN-14518.

Quick selection charts

The quick selection charts are made for two Celo beams with a water circuit connected in series. If the cooling effect is required for only one beam, divide the cooling effect by two.

Noise

The sound pressure levels in table 4 refer to two Celo beams with a water circuit connected in series that are installed in a room with an Ecophon Focus (20 mm) suspended ceiling. If the sound pressure level is required for only one beam, divide the air quantity by two and reduce the sound pressure by 3 dB(A).

Nozzle pressure 60 Pa			Water															Air
Q(m³/h)	Q(l/s)	Celo x 2	Δt room - average water 7° C			Δt room - average water 8° C			Δt room - average water 9° C			Δt room - average water 10° C			Δt room - average water 7° C			Total pressure, duct
			P(W)	q(l/s)	p(kPa)	P(W)	q(l/s)	p(kPa)	P(W)	q(l/s)	p(kPa)	P(W)	q(l/s)	p(kPa)	P(W)	q(l/s)	p(kPa)	Pa
36	10	1,2	141	0,011	0,1	172	0,014	0,2	206	0,016	0,2	245	0,019	0,3	286	0,023	0,3	62
		1,8	218	0,017	0,3	271	0,022	0,5	330	0,026	0,7	390	0,031	0,9	449	0,036	1,1	
54	15	1,2	172	0,014	0,2	212	0,017	0,2	256	0,020	0,3	306	0,024	0,4	357	0,028	0,5	63
		1,8	284	0,023	0,5	353	0,028	0,7	423	0,034	1,0	490	0,039	1,3	552	0,044	1,5	
		2,4	388	0,031	1,2	471	0,038	1,6	547	0,044	2,1	617	0,049	2,6	682	0,054	3,1	
72	20	1,2	192	0,015	0,2	238	0,019	0,2	290	0,023	0,3	344	0,027	0,4	400	0,032	0,6	64
		1,8	336	0,027	0,7	414	0,033	1,0	488	0,039	1,3	557	0,044	1,6	619	0,049	1,9	
		2,4	458	0,037	1,6	544	0,043	2,1	622	0,050	2,6	695	0,055	3,2	765	0,061	3,8	
		3,0	553	0,044	2,7	643	0,051	3,5	724	0,058	4,4	806	0,064	5,3	888	0,071	6,3	
90	25	1,2	209	0,017	0,2	260	0,021	0,3	316	0,025	0,4	375	0,030	0,5	433	0,034	0,6	65
		1,8	374	0,030	0,8	456	0,036	1,1	532	0,042	1,5	601	0,048	1,8	666	0,053	2,1	
		2,4	511	0,041	1,9	598	0,048	2,4	678	0,054	3,0	755	0,060	3,7	832	0,066	4,4	
		3,0	611	0,049	3,2	703	0,056	4,1	792	0,063	5,1	881	0,070	6,2	971	0,077	7,4	
		3,6	692	0,055	4,9	792	0,063	6,2	893	0,071	7,7	994	0,079	9,4	1095	0,087	11,2	
108	30	1,2	232	0,018	0,2	290	0,023	0,3	351	0,028	0,5	414	0,033	0,6	474	0,038	0,7	66
		1,8	402	0,032	0,9	486	0,039	1,2	562	0,045	1,6	634	0,050	2,0	698	0,056	2,3	
		2,4	550	0,044	2,1	640	0,051	2,7	721	0,057	3,4	802	0,064	4,1	884	0,070	4,9	
		3,0	657	0,052	3,7	753	0,060	4,7	849	0,068	5,8	944	0,075	7,0	1041	0,083	8,4	
		3,6	744	0,059	5,5	852	0,068	7,1	960	0,076	8,8	1069	0,085	10,7	1178	0,094	12,8	
126	35	1,2	273	0,022	0,3	341	0,027	0,4	410	0,033	0,6	476	0,038	0,8	538	0,043	0,9	68
		1,8	424	0,034	1,0	509	0,041	1,3	586	0,047	1,7	657	0,052	2,1	724	0,058	2,5	
		2,4	579	0,046	2,3	669	0,053	3,0	754	0,060	3,7	840	0,067	4,5	925	0,074	5,3	
		3,0	694	0,055	4,0	795	0,063	5,1	896	0,071	6,4	997	0,079	7,7	1098	0,087	9,3	
		3,6	789	0,063	6,2	904	0,072	7,9	1019	0,081	9,8	1134	0,090	11,9	1249	0,099	14,2	
144	40	1,2	347	0,028	0,4	427	0,034	0,6	502	0,040	0,8	570	0,045	1,0	635	0,051	1,2	70
		1,8	444	0,035	1,1	530	0,042	1,4	607	0,048	1,8	679	0,054	2,2	748	0,060	2,6	
		2,4	602	0,048	2,5	693	0,055	3,2	781	0,062	3,9	869	0,069	4,7	958	0,076	5,7	
		3,0	724	0,058	4,4	829	0,066	5,5	934	0,074	6,9	1040	0,083	8,4	1146	0,091	10,0	
		3,6	828	0,066	6,7	948	0,075	8,6	1069	0,085	10,7	1189	0,095	13,0	1310	0,104	15,6	

Table 1. Flow-adjusted effect table for 2 Celo beams connected in series (water circuit). Cooling circuit Δt = 3° C (Water in-out).
For the red values, the flow is below the recommended minimum flow of 0.035 l/s at Δt = 3° C. Increase the flow to the recommended minimum flow.

Supply air beam Celo

Cooling effect from the water circuit

Nozzle pressure 80 Pa			Water															Air
Q(m³/h)	Q(l/s)	Celo x 2	Δt room - average water 7° C			Δt room - average water 8° C			Δt room - average water 9° C			Δt room - average water 10° C			Δt room - average water 7° C			Total pres-sure, duct
			P(W)	q(l/s)	p(kPa)	P(W)	q(l/s)	p(kPa)	P(W)	q(l/s)	p(kPa)	P(W)	q(l/s)	p(kPa)	P(W)	q(l/s)	p(kPa)	Pa
36	10	1,2	151	0,012	0,1	184	0,015	0,2	222	0,018	0,2	264	0,021	0,3	309	0,025	0,4	82
		1,8	239	0,019	0,4	299	0,024	0,6	362	0,029	0,8	425	0,034	1,0	486	0,039	1,2	
54	15	1,2	182	0,015	0,2	225	0,018	0,2	274	0,022	0,3	326	0,026	0,4	380	0,030	0,5	83
		1,8	307	0,024	0,6	380	0,030	0,8	453	0,036	1,1	521	0,041	1,4	583	0,046	1,7	
		2,4	422	0,034	1,3	507	0,040	1,8	583	0,046	2,3	655	0,052	2,9	721	0,057	3,4	
72	20	1,2	204	0,016	0,2	253	0,020	0,3	308	0,025	0,4	365	0,029	0,5	423	0,034	0,6	84
		1,8	359	0,029	0,8	440	0,035	1,1	515	0,041	1,4	584	0,046	1,7	649	0,052	2,0	
		2,4	489	0,039	1,7	576	0,046	2,3	655	0,052	2,9	729	0,058	3,5	804	0,064	4,1	
		3,0	588	0,047	3,0	679	0,054	3,9	765	0,061	4,8	852	0,068	5,8	938	0,075	6,9	
90	25	1,2	222	0,018	0,2	277	0,022	0,3	336	0,027	0,4	397	0,032	0,6	456	0,036	0,7	85
		1,8	397	0,032	0,9	481	0,038	1,2	557	0,044	1,6	626	0,050	1,9	692	0,055	2,3	
		2,4	539	0,043	2,0	627	0,050	2,7	709	0,056	3,3	789	0,063	4,0	869	0,069	4,7	
		3,0	644	0,051	3,5	738	0,059	4,5	832	0,066	5,6	926	0,074	6,8	1020	0,081	8,1	
		3,6	730	0,058	5,4	836	0,067	6,8	942	0,075	8,5	1049	0,084	10,3	1156	0,092	12,3	
108	30	1,2	247	0,020	0,3	309	0,025	0,4	374	0,030	0,5	438	0,035	0,7	499	0,040	0,8	86
		1,8	425	0,034	1,0	510	0,041	1,4	587	0,047	1,7	658	0,052	2,1	725	0,058	2,5	
		2,4	576	0,046	2,3	666	0,053	3,0	751	0,060	3,7	836	0,067	4,4	921	0,073	5,3	
		3,0	688	0,055	4,0	787	0,063	5,1	888	0,071	6,3	988	0,079	7,6	1088	0,087	9,1	
		3,6	781	0,062	6,1	895	0,071	7,7	1009	0,080	9,6	1123	0,089	11,7	1237	0,099	14,0	
126	35	1,2	292	0,023	0,3	363	0,029	0,5	434	0,035	0,6	502	0,040	0,8	564	0,045	1,0	88
		1,8	447	0,036	1,1	533	0,042	1,5	610	0,049	1,8	682	0,054	2,2	751	0,060	2,7	
		2,4	604	0,048	2,5	696	0,055	3,2	784	0,062	3,9	873	0,070	4,8	962	0,077	5,7	
		3,0	724	0,058	4,4	829	0,066	5,5	934	0,074	6,9	1040	0,083	8,4	1145	0,091	10,0	
		3,6	826	0,066	6,7	946	0,075	8,6	1066	0,085	10,6	1187	0,095	13,0	1308	0,104	15,5	
144	40	1,2	370	0,029	0,5	452	0,036	0,7	527	0,042	0,9	596	0,047	1,1	661	0,053	1,3	90
		1,8	468	0,037	1,2	554	0,044	1,6	634	0,050	2,0	705	0,056	2,4	777	0,062	2,8	
		2,4	626	0,050	2,6	720	0,057	3,4	811	0,065	4,2	903	0,072	5,1	995	0,079	6,1	
		3,0	753	0,060	4,7	863	0,069	6,0	973	0,077	7,4	1083	0,086	9,0	1193	0,095	10,8	
		3,6	864	0,069	7,3	990	0,079	9,3	1116	0,089	11,6	1242	0,099	14,1	1368	0,109	16,9	

Table 2. Flow-adjusted effect table for 2 Celo beams connected in series (water circuit). Cooling circuit Δt = 3°C (Water in-out).
For the red values, the flow is below the recommended minimum flow of 0.035 l/s at Δt = 3° C. Increase the flow to the recommended minimum flow..

We reserve the right to make changes

Supply air beam Celo

Cooling effect from the water circuit

Nozzle pressure 100 Pa			Water															Air
Q(m³/h)	Q(l/s)	Celo x 2	Δt room - average water 7° C			Δt room - average water 8° C			Δt room - average water 9° C			Δt room - average water 10° C			Δt room - average water 7° C			Total pres-sure, duct
			P(W)	q(l/s)	p(kPa)	P(W)	q(l/s)	p(kPa)	P(W)	q(l/s)	p(kPa)	P(W)	q(l/s)	p(kPa)	P(W)	q(l/s)	p(kPa)	Pa
36	10	1,2	161	0,013	0,1	197	0,016	0,2	238	0,019	0,2	284	0,023	0,3	332	0,026	0,4	102
		1,8	263	0,021	0,5	329	0,026	0,7	396	0,032	0,9	462	0,037	1,1	523	0,042	1,4	
54	15	1,2	193	0,015	0,2	239	0,019	0,2	290	0,023	0,3	345	0,027	0,4	401	0,032	0,6	103
		1,8	331	0,026	0,7	408	0,033	0,9	482	0,038	1,2	551	0,044	1,5	613	0,049	1,9	
		2,4	457	0,036	1,5	543	0,043	2,1	620	0,049	2,6	693	0,055	3,2	763	0,061	3,8	
72	20	1,2	214	0,017	0,2	266	0,021	0,3	324	0,026	0,4	383	0,031	0,5	442	0,035	0,7	104
		1,8	382	0,030	0,8	464	0,037	1,2	540	0,043	1,5	609	0,049	1,8	675	0,054	2,2	
		2,4	519	0,041	1,9	607	0,048	2,5	687	0,055	3,1	765	0,061	3,8	843	0,067	4,5	
		3,0	624	0,050	3,3	717	0,057	4,3	808	0,064	5,3	899	0,072	6,4	991	0,079	7,7	
90	25	1,2	233	0,019	0,2	290	0,023	0,3	352	0,028	0,5	415	0,033	0,6	475	0,038	0,7	105
		1,8	418	0,033	1,0	503	0,040	1,3	579	0,046	1,7	651	0,052	2,1	717	0,057	2,4	
		2,4	566	0,045	2,2	655	0,052	2,9	739	0,059	3,5	822	0,065	4,3	906	0,072	5,1	
		3,0	676	0,054	3,9	774	0,062	4,9	873	0,069	6,1	971	0,077	7,4	1070	0,085	8,8	
		3,6	770	0,061	5,9	882	0,070	7,5	994	0,079	9,4	1107	0,088	11,4	1219	0,097	13,6	
108	30	1,2	259	0,021	0,3	323	0,026	0,4	390	0,031	0,5	456	0,036	0,7	517	0,041	0,9	106
		1,8	444	0,035	1,1	530	0,042	1,4	607	0,048	1,8	679	0,054	2,2	748	0,060	2,6	
		2,4	600	0,048	2,5	692	0,055	3,2	780	0,062	3,9	868	0,069	4,7	956	0,076	5,6	
		3,0	718	0,057	4,3	822	0,065	5,5	927	0,074	6,8	1032	0,082	8,2	1136	0,090	9,9	
		3,6	820	0,065	6,6	939	0,075	8,4	1059	0,084	10,5	1179	0,094	12,8	1298	0,103	15,3	
126	35	1,2	306	0,024	0,4	379	0,030	0,5	452	0,036	0,7	520	0,041	0,9	582	0,046	1,1	108
		1,8	466	0,037	1,2	552	0,044	1,5	631	0,050	2,0	703	0,056	2,4	774	0,062	2,8	
		2,4	627	0,050	2,7	720	0,057	3,4	812	0,065	4,2	904	0,072	5,1	995	0,079	6,1	
		3,0	753	0,060	4,7	862	0,069	6,0	972	0,077	7,4	1082	0,086	9,0	1192	0,095	10,8	
		3,6	863	0,069	7,2	989	0,079	9,3	1115	0,089	11,5	1241	0,099	14,1	1367	0,109	16,8	
144	40	1,2	386	0,031	0,5	469	0,037	0,7	545	0,043	0,9	614	0,049	1,2	680	0,054	1,4	110
		1,8	486	0,039	1,2	573	0,046	1,7	652	0,052	2,1	726	0,058	2,5	800	0,064	3,0	
		2,4	649	0,052	2,8	743	0,059	3,6	838	0,067	4,4	932	0,074	5,4	1027	0,082	6,4	
		3,0	781	0,062	5,0	895	0,071	6,4	1009	0,080	7,9	1123	0,089	9,6	1237	0,099	11,5	
		3,6	900	0,072	7,8	1031	0,082	10,0	1162	0,093	12,5	1294	0,103	15,2	1425	0,113	18,2	

Table 3. Flow-adjusted effect table for 2 Celo beams connected in series (water circuit). Cooling circuit Δt = 3°C (Water in-out).
For the red values, the flow is below the recommended minimum flow of 0.035 l/s at Δt = 3° C. Increase the flow to the recommended minimum flow..

Supply air beam Celo

1 2 3 4 5 6 7 8 9 10 11 12 13 14 15 16 17 18 19

Sound data

Sound pressure level L_p [dB(A)]

		Airflow (l/s)						
	Air pressure (Pa)	**15**	**20**	**25**	**30**	**35**	**40**	**45**
Master 40 mm	60	16	18	21	22	23	25	28
	80	18	21	23	25	27	28	31
	100	21	23	25	26	28	30	33
Focus 20 mm	60	17	19	22	23	24	26	29
	80	19	22	24	26	28	29	32
	100	22	24	26	27	29	31	34

Table 4. Celo, sound pressure level Lp [dB(A)]. The measurements were conducted with 2 Celo beams. The measurements were made in a test chamber with dimensions (L×W×H) 3.8 m × 3.2 m × 2.7. The test chamber had an installed ceiling with dimensions 3.6 m × 3.0 m, with Ecophon's acoustic panels of different types, according to the table above. The test chamber had plaster walls and a concrete floor.

Sound pressure level L_{poct}

	K_{oct} (dB[A]) Octave band, average frequency (Hz)							
	63 Hz	**125 Hz**	**250 Hz**	**500 Hz**	**1 kHz**	**2 kHz**	**4 kHz**	**8 kHz**
Master 40 mm	4	9	5	0	-8	-12	-12	-9
Focus 20 mm	2	9	5	1	-8	-13	-13	-10
Tolerance	±2	±2	±2	±2	±2	±2	±2	±2

Table 5. Celo's sound pressure levels L_{poct} for each octave band in the installation are calculated by adding the corrections C_{oct} from the table above to the sound pressure levels read off in the table for each ceiling at different air pressures/air flows. The sound pressure levels are calculated according to the following formula: $L_{poct}=L_p+C_{oct}$

Sound attenuation ΔL

DL[dB]	**63 Hz**	**125 Hz**	**250 Hz**	**500 Hz**	**1 kHz**	**2 kHz**	**4 kHz**	**8 kHz**
Master 40 mm	27	23	22	14	12	16	14	17
Focus 20 mm	29	22	21	13	11	15	14	17

Table 6. Celo sound attenuation ΔL.

We reserve the right to make changes

Supply air beam

Celo

Couplings & connections

Celo is supplied in lengths from 1.2 m to 3.6 m in steps of 0.3 m. The connection dimension for the water is o.d. 15 mm and for the air 80 mm

Designations
Figure 2 shows the different coupling options for Celo. Type A1 has a horizontal air connection at the end and a horizontal pipe connection at the same end of the beam.

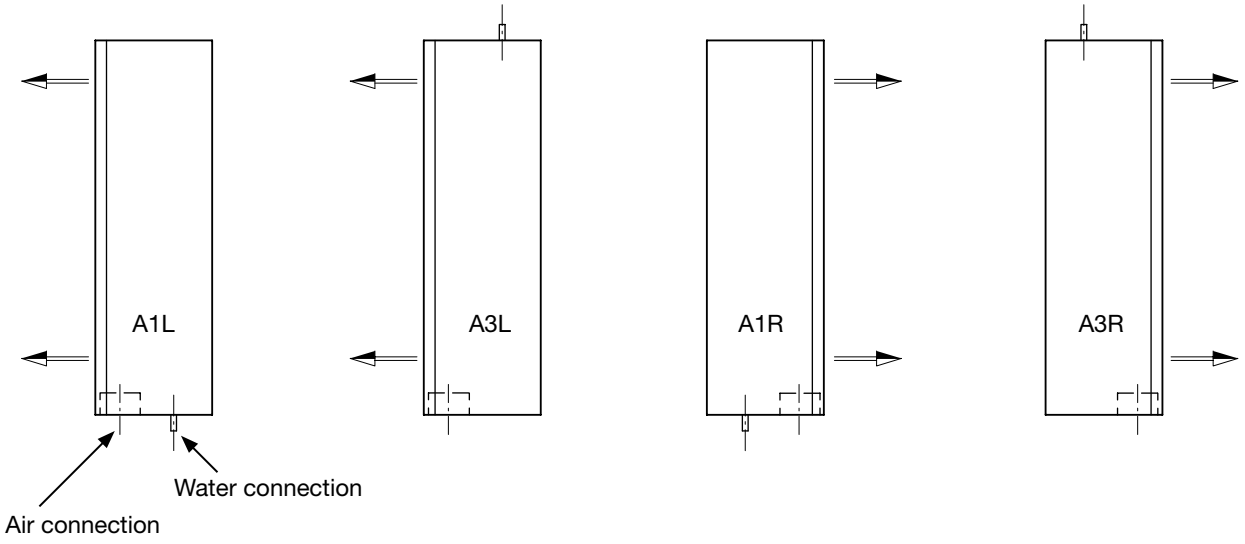

Figure 2. Celo has four different coupling options, A1L, A3L, A1R and A3R.

Supply air beam

Celo

Width & height, mm

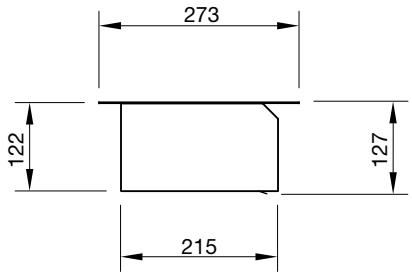

Length, m

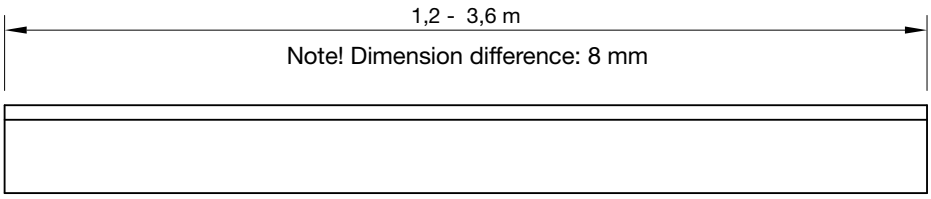

Connection dimensions, mm

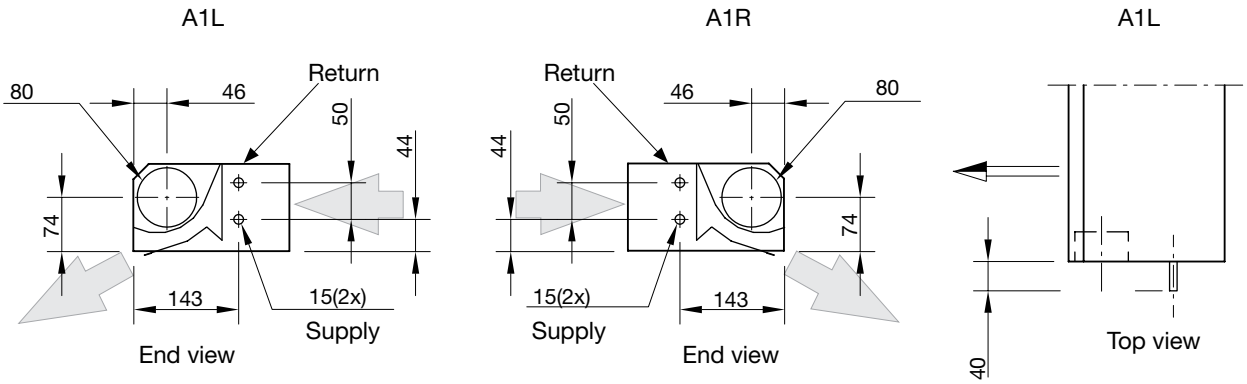

Figure 3. Celo, width, height and connection dimensions.

Weight & water content

Weight, kg/m	6.5
Water content, l/m	0.35

Table 7. Celo, weight & water content.

We reserve the right to make changes

Supply air beam

Celo

Installation

Celo is installed above the suspended ceiling. The beam is attached to the ceiling joist with suspended wires, threaded rods or screws. Installation components can be ordered as accessories.

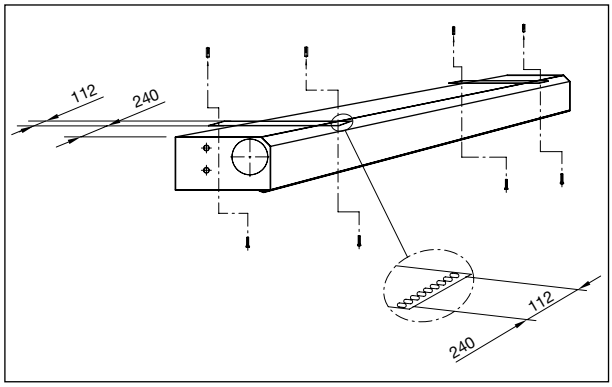

Figure 3. Dimensions for fixing points.

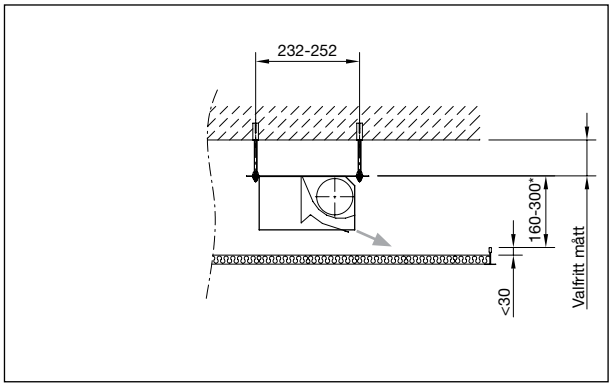

Figure 4. Dimensions for suspended installation. Suspended island installation.

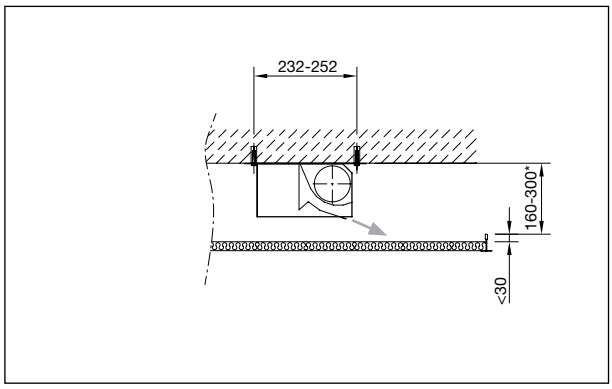

Figure 5. Measurement for installation on to a ceiling joist. Suspended island installation.

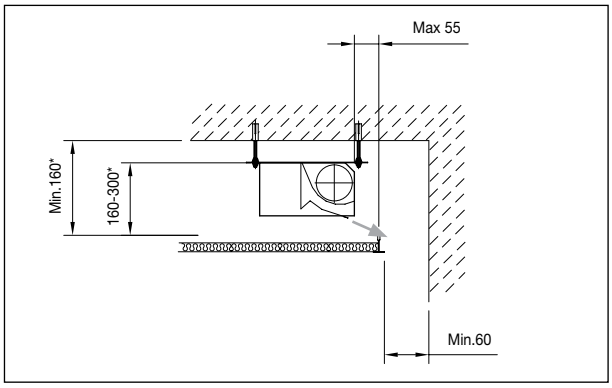

Figure 6. Dimensions for installation, outlet along the wall.

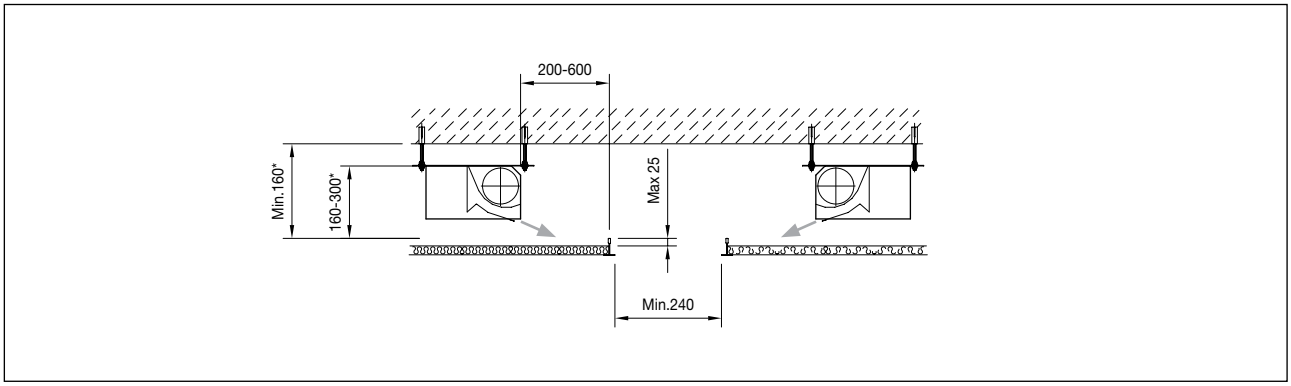

Figure 7. Dimensions for suspended island installation. The maximum dimension of 25 mm is between the upper edge of the suspended ceiling and the highest point of the ceiling that can interfere with the air current.

* The dimension is between the upper edge of the beam and the highest point of the ceiling that can interfere with the air current.

Supply air beam Celo

Installation examples

Wall-to-wall suspended ceiling with slits

To achieve a sufficiently high water flow according to the effect diagram when shorter units are used, it is often necessary to have two Celo beams connected in series.

When the water circuit is connected in series, the same water flow goes through both beams.

This results in a water flow through the beam that is twice as large as the flow in parallel-coupled beams, at the same temperature difference (supply/return) and cooling effect.

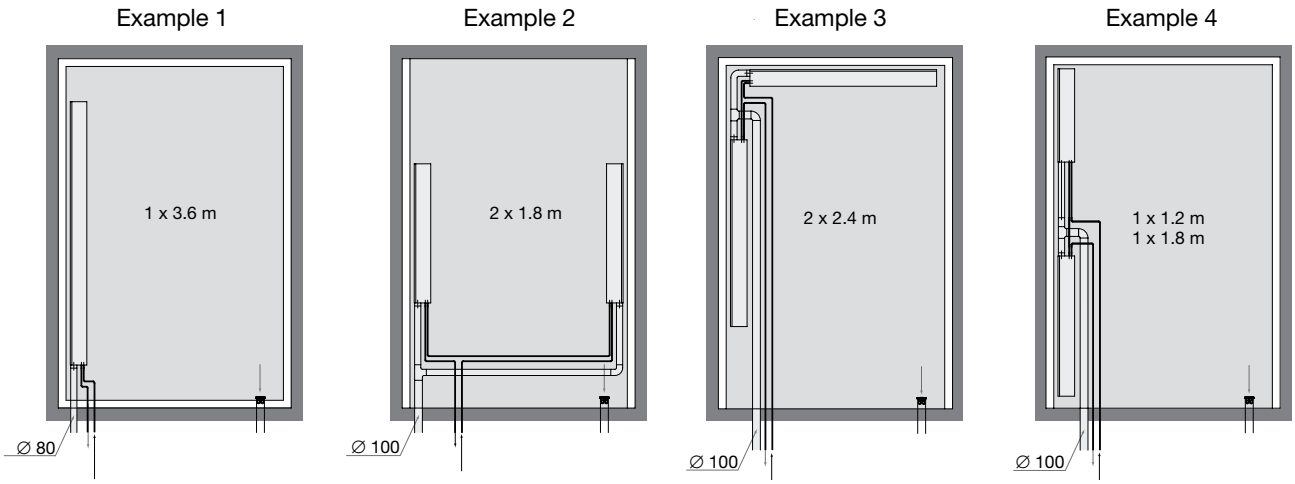

Figure 8. Four examples of how Celo beams can be placed in combination with different slits in the suspended ceiling, including suitable water and air connection.

NB! Each supply air beam has an air connection of Ø80 mm. Each supply air beam has a maximum air volume to fulfil the desired noise levels. Two beams cope with a greater total air volume.

To avoid increased air velocities, the distance from end to end should be greater than 1200 mm (see figure 8, example 4). Lindab's control valves can be used as exhaust air units.

Suspended island installation

Celo can also be installed in a suspended island. The picture below shows examples of this.

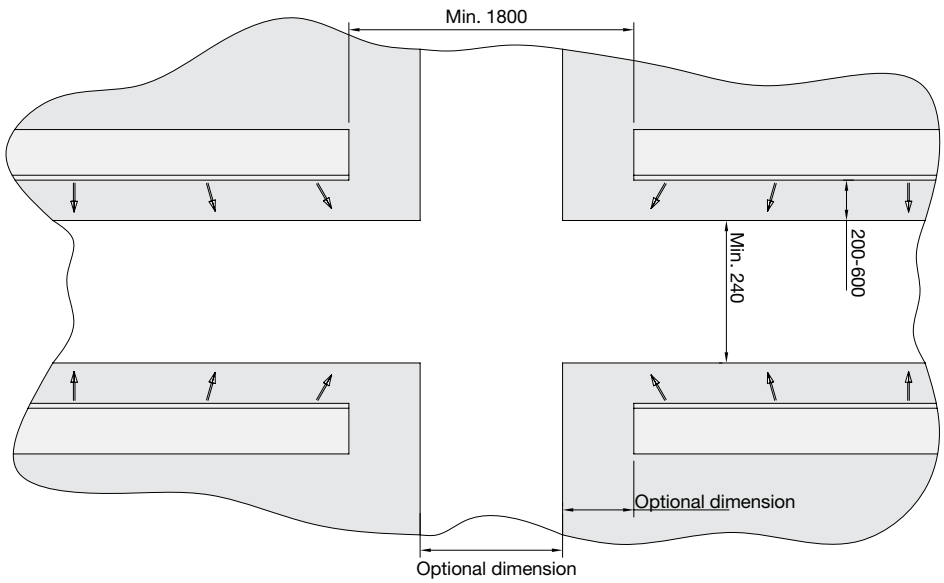

Figure 9. The picture shows four corners where suspended ceiling islands meet.

We reserve the right to make changes

Supply air beam Celo

Distribution diagrams, Celo

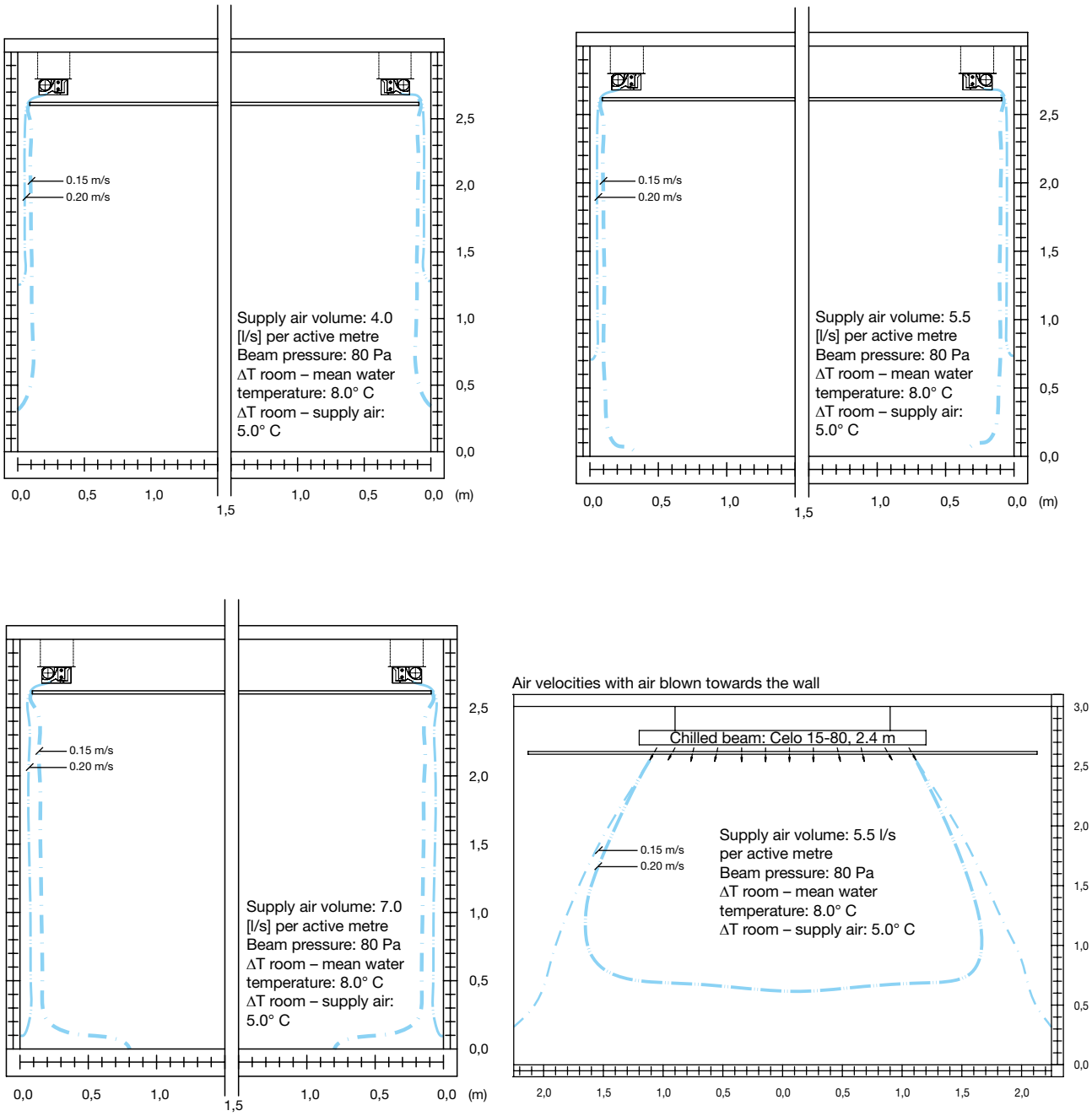

Figure 10 - 13. Air velocities, wall-to-wall suspended ceiling with slits along walls.

Supply air beam Celo

Distribution diagrams, Celo

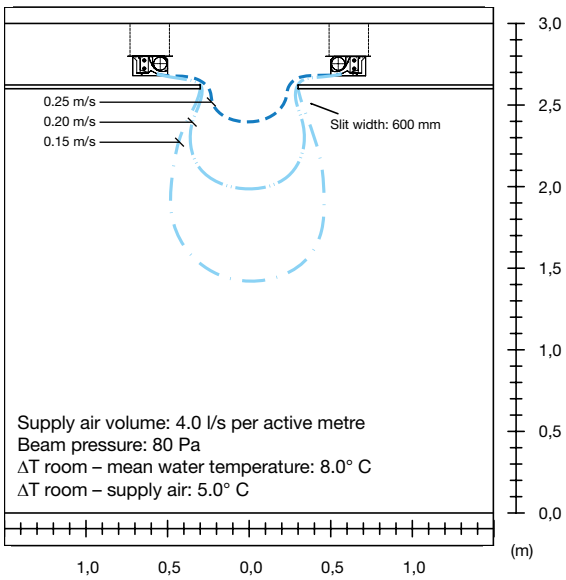

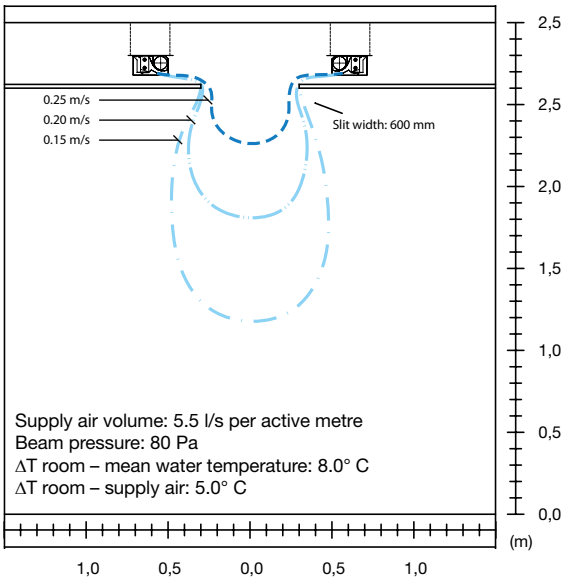

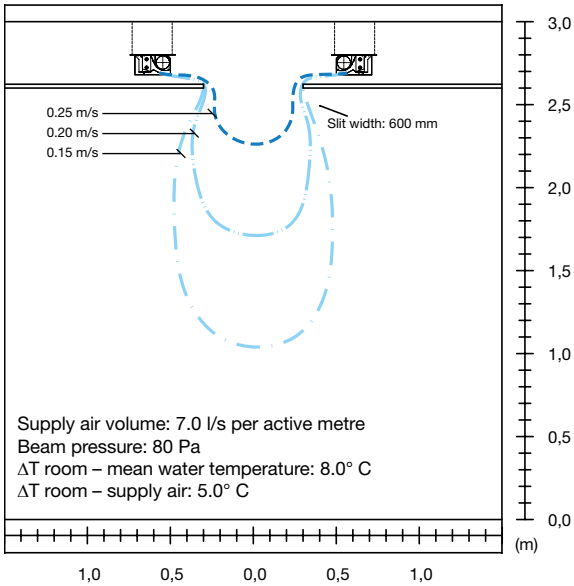

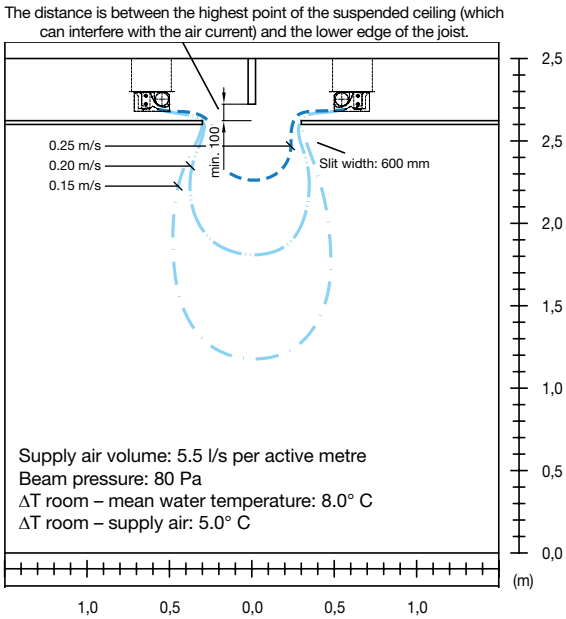

Figure 14 - 17. Air velocities, suspended island installation

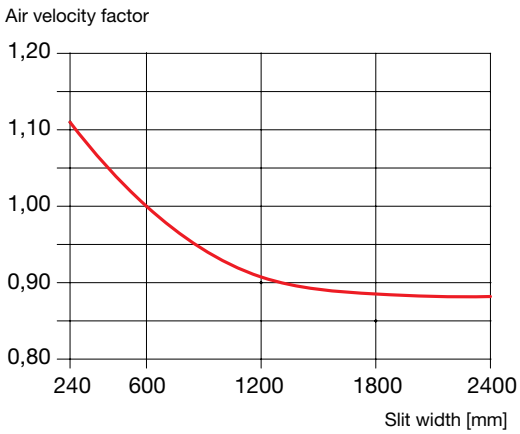

Diagram 5. With a slit width of 600 mm, the air velocities shown above apply for suspended islands. When the slit width is less than 600 mm, the air velocity increases. When the slit is wider than 600 mm, the air velocity decreases.

We reserve the right to make changes

Supply air beam Celo

Pressure drop in water circuit, cooling

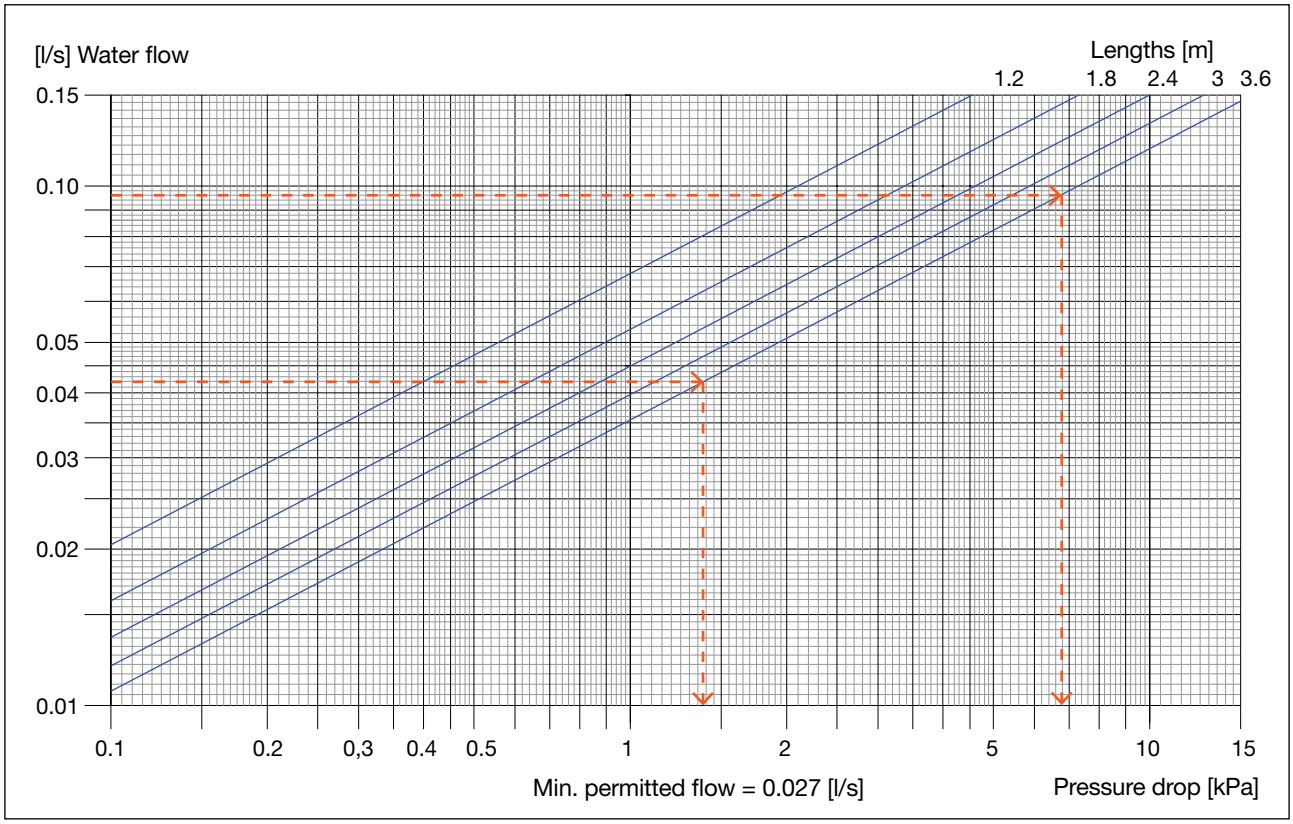

Diagram 6. Pressure drop in water circuit, cooling.

$q_w = P / (C_p \times \Delta t)$

q_w = *water flow [l/s]*
P = *effect [W]*
C_p = *specific heat capacity [J/(kg·K)]*
Δt = *temperature difference in the water circuit in/out [K]*

Example:

One 3.6 m Celo beam supplies an output of 539 W.
$\Delta t = 3$ *K*
$q_w = 539 / (4200 \times 3) = 0.043$ *l/s*
The pressure drop in the water circuit is read off at 1.4 kPa on diagram 6.

Example:

Two 3.6 m Celo beams connected in series supply an output of 1115 W.
$\Delta t = 3$ *K*
Water flow $q_w = 1115 / (4200 \times 3) = 0.088$ *l/s*
The pressure drop in the water circuit for one Celo is read off as 5.8 kPa from diagram 6.
The combined pressure drop for two Celo beams will then be 5.8 + 5.8 = 11.6 kPa.

Supply air beam Celo

Control

Lindab offers control equipment that is very simple to use. To avoid heating and cooling being activated, the systems are controlled sequentially (Regula Combi). It is also possible to control only the heating or the cooling (Regula Mono). For the technical data, refer to the chapter Regula.

Colour

The standard colour for Celo is white, RAL 9010, gloss value 30. Other colours may be ordered specially.

Designations

Product/Version:	Celo
Connection diam. water, [mm]:	15
Connection dim. air, [mm]:	80
Coupling options:	Air: A
Water:	1, 3
Air injection d direction:	L/R
Length, [m]:	Length in metres
Air quantity, [l/s]:	Must always be specified
Nozzle pressure, [Pa]:	Must always be specified
Distribution profile:	Standard (30°)
Plus features:	See page 308

Programme text

Celo with fan-shaped distribution pattern for concealed installation above a suspended ceiling.

Supply air beams from Lindab	**Qty**
Product:	
Celo 15-80-A1L-1.8 m	40
Air quantity:	15 l/s
Nozzle pressure:	80 Pa
Plus features:	
Drypac:	
Regula Secura:	
Regula Connect:	
Control valve, cooling:	
Actuator, cooling:	
Accessories:	
Regula Combi:	20
Product:	
Celo 15-80-A1R-1.8 m	20
Air quantity:	15 l/s
Nozzle pressure:	80 Pa
Plus features:	
Drypac:	
Regula Secura:	
Regula Connect:	
Control valve, cooling:	
Actuator, cooling:	
Air vent:	
Accessories:	
Regula Combi:	10
Accessory installation components:	
Suspension wire, 0.5 m:	160

We reserve the right to make changes

Chilled beam

Cabinett

Contact, Overview, Index	1
Guideline heating and cooling	2
Plexus	3
Professor	4
Pilot	5
Architect	6
Polaris I & S	7
Plafond	8
Podium	9
Celo	10
Cabinett	11
Capella	12
Carat	13
Fasadium	14
Atrium H & C /Loggia	15
Regula	16
Drypac™	17
Lighting	18
TEKNOsim	19

© 10.2009 Lindab Ventilation A/S. All forms of reproduction without written permission are forbidden. Lindab® is the registered trademark of Lindab AB.
Lindab's products, systems, product and product group designations are protected by intellectual property rights (IPR).

Chilled beam

Cabinett

Use

Lindab's natural convection beam Cabinett is a quiet and individually adjustable passive chilled beam.

Cabinett can be provided with the following functions; cooling, heating, ventilation, Drypac™ condensation protection, Regula Secura condensation guard, built-in valves and actuators, etc. The product offers many possibilities and great flexibility.

Installation

Cabinett is available for both integrated and suspended installation.

When the installation is integrated in the ceiling, Cabinett is mounted on top of a standard T-support.

Cabinett can be supplied with horizontal and vertical connections.

Worth noting

Cabinett is available in three different versions, with different designs. Cabinett is a passive chilled beam with a high cooling capacity and allows great freedom in placement. Lindab's chilled beams are Eurovent-certified and tested according to EN-15116, EN-14518.

Key figures

Length:	1.2 – 3.6 m
Width:	412 mm (A 42, F 42) and 592 mm (K 60)
Height:	150 mm (A 42), 300 mm (F 42) and 232 mm (K 60)
Capacity:	Cooling effect of 920 W

Chilled beam

Cabinett

Function

When warm air from the room passes through the finned battery in the beam, the heat is absorbed into the cold water that flows through the battery. This is driven by the convection of the warm air in the room. As a result of the density increase, which occurs when the air is cooled, the air sinks down through the battery.

Construction

Cabinett has a battery of aluminium fins and copper pipes, which are expanded mechanically so that the metals are in contact.

The battery has NT 10 pressure class. Cabinett has a steel plate casing and the underside is made as standard from perforated, coated steel sheet. The underside is removable, to allow the battery to be cleaned.

The water pipes are made of copper. Nevertheless, the water should be oxygen-free to prevent corrosion.

Design

Cabinett is available in three different versions. One model is designed primarily for integrated installation in a suspended ceiling and two models for suspended installation. During the development of the integrated version of Cabinett, we gave a high priority to maintaining a low installation height. The beam height for integrated installation is only 242 mm, which facilitates placement. The underside can be given various looks, either with transverse slots (Slot, the standard) or with round perforations (Dot).

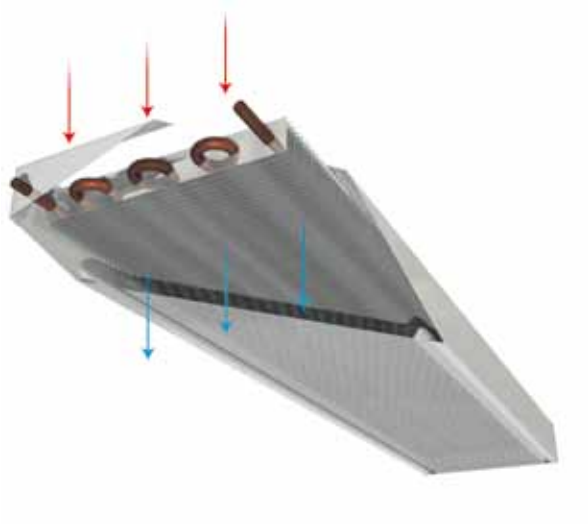

Picture 1. Diagram showing the operation of Cabinett A 42.

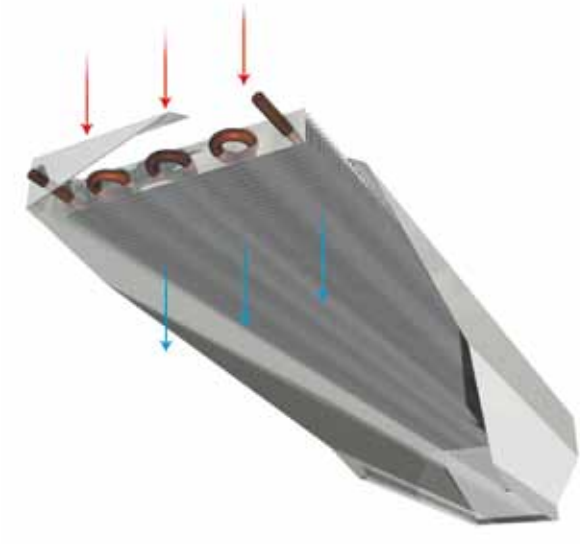

Picture 2. Diagram showing the operation of Cabinett F 42.

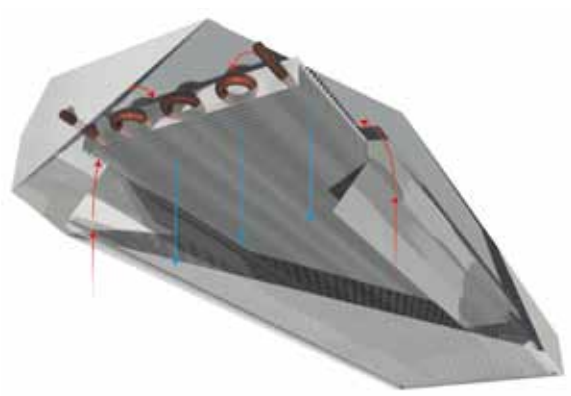

Picture 3. Diagram showing the operation of Cabinett K 60 with closed air circulation.

We reserve the right to make changes

Chilled beam Cabinett

Data

Versions

Cabinett is available in three versions: A 42 and K 60 for integrated or, alternatively, suspended installation with a width of 412 mm or 592 mm, respectively, as well as an F 42 version with a width of 250 mm for suspended installation.

Lengths: Cabinett is available in lengths from 1.2 m to 3.6 m in steps of 0.1 m.

Water connection: Available in o.d. 15 mm. Both horizontal and vertical connection are available as part of the standard package.

Design: Cabinett is available with different types of underside. As standard, the beam is supplied with longitudinal slots (Slot) but round perforations (Dot) are also available (**NB!** Cabinett F42 is not delivered with face plate).

Surface treatment: Cabinett is manufactured as standard from white enamelled sheet metal, colour, RAL 9010.

Plus features

Factory preinstalled.

Drypac™: The beam can be provided with an anti-condensation surface layer, which ensures increased protection against condensation (refer to the chapter Drypac).

Integrated valve and actuator: A control valve, with variable Kv value, and an actuator can be pre-installed in the product.

Regula Secura: As an option, Lindab's Regula Secura condensation guard can be installed in the product.

Regula Connect: The product can be equipped with a Regula Connect connection card (refer to chapter Regula).

Air vent: Air vents are not supplied as part of the standard package but they can be ordered to be pre-installed.

Accessories

Delivered separately.

Control: Refer to the Regula.

Chilled beam Cabinett

Dimensioning

To calculate Cabinett's effect, follow the steps below.

1. At Δt (room – mean water)
2. Product length minus 0.1 m, to obtain the active length.
3. Read off the effect per active metre at the calculated Δt in table 1.
4. Multiply the effect by the active length.
5. Calculate the water flow using this effect.
6. Use diagram 1 and read off the effect factor at the calculated water flow.
7. Multiply the effect by the effect factor.
8. Repeat steps 5 to 7.

Example
What is the cooling effect of a 2.6 m Cabinett F 42?
The room's summer temperature is assumed to be 24.5° C
The cooling water temperature in/out of Cabinett is 14/17° C

Answer
Temperature difference Δt = room – mean water
Δt = 24.5 - (14+17) / 2 = 9 K
Active length = 2.4m - 0.1m = 2.3 m
In table 1, read off the effect per metre of active length for Cabinett F 42 at Δt = 9K. The value is 245 W.
Cooling effect (P) = 245 × 2.3 m = 564 W

Calculate the water flow in Cabinett F 42 using the following formula: $q_w = P / (C_p \times \Delta t)$.

Where:
q_w = water flow [l/s]
P = effect [W]
C_p = specific heat capacity [J/(kg·K)]
Δt = temperature difference in the water circuit in/out [K]
q_w = 564 / (4200 x 3) = 0.045 l/s

The effect factor, which is then read off, from diagram 2, will be 1.03 and the new effect P = 564 x 1.03 = 581 W.

Calculate the new water flow using the new effect
q_w = 581 / (4200 x 3) = 0.046 l/s.

The effect factor, which is then read off from diagram 2, will be 1.035, and the new effect P = 564 x 1.035 = 583 W.

Calculate the new water flow using the new effect
q_w = 583 / (4200 x 3) = 0.046 l/s.

The effect factor will then be 1.035 and the heating effect will be 583 W.

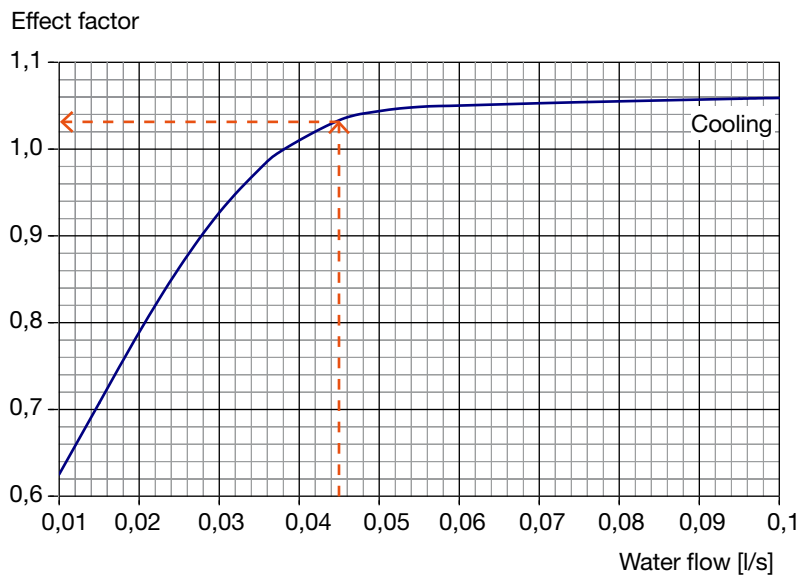

Diagram 1. Effect factor as a function of water flow.

We reserve the right to make changes

Chilled beam Cabinett

Cooling effect, Cabinett

Drypac™, condensation protection

All Cabinett models can be ordered with the Drypac™ plus feature, condensation protection consisting of perlite (volcanic stone), which is applied to the fin surfaces. Drypac™ has properties that enable it to work with a supply temperature that is 4° C below the dew point, for continuous operation, and 5 to 8° C below the dew point for limited periods.

Drypac™ provides both an increased effect and increased security against condensation drips. At a working temperature above the dew point, output is reduced by 17%, but when the working temperature is below the dew point, there is no reduction in output. This means that the effect is highest when the need is greatest.

For more information about Drypac™, refer to the chapter Drypac™.

	Cooling effect (W/m) Room temperature - mean water temperature (°C)							
	5	6	7	8	9	10	11	12
A 42	64	82	103	126	152	185	225	279
F 42	101	129	161	199	245	307	360	395
K60	64	82	103	126	152	185	225	279

Table 1. Cabinett, cooling effect W per metre of active length.

Couplings & Connections

Cabinett is supplied in lengths from 1.2 m to 3.6 m in steps of 0.1 m. The connection dimension is approx. 15 mm for the water connection.

Cabinett is available with two coupling options. This is how to find the designation for the coupling option you require for Cabinett:

Indicate the position for the pipe connection.

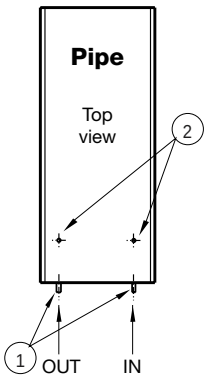

Supply is always the connection on the right, when facing the pipes

Figure 1. Coupling and connection options

Chilled beam Cabinett

Dimensions & connections

Cabinett A 42

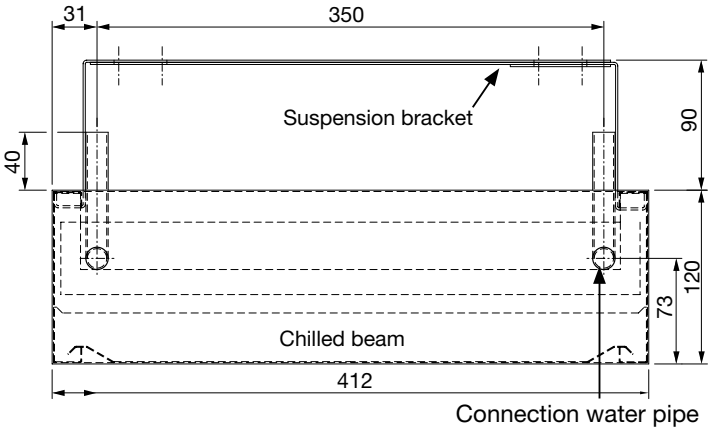

Cabinett F 42

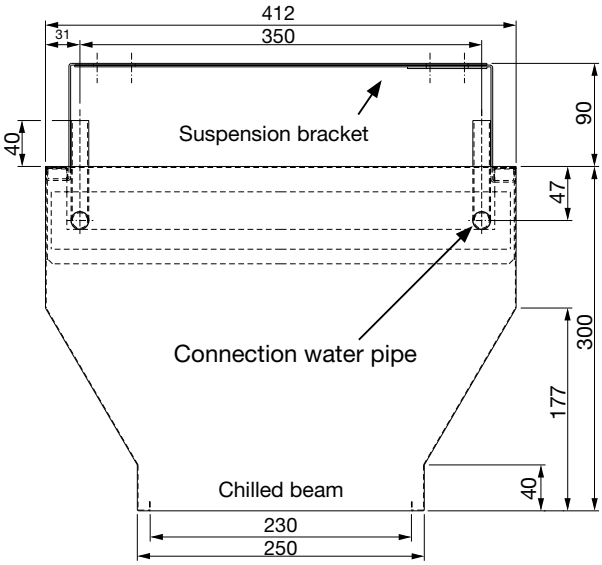

Cabinett K 60

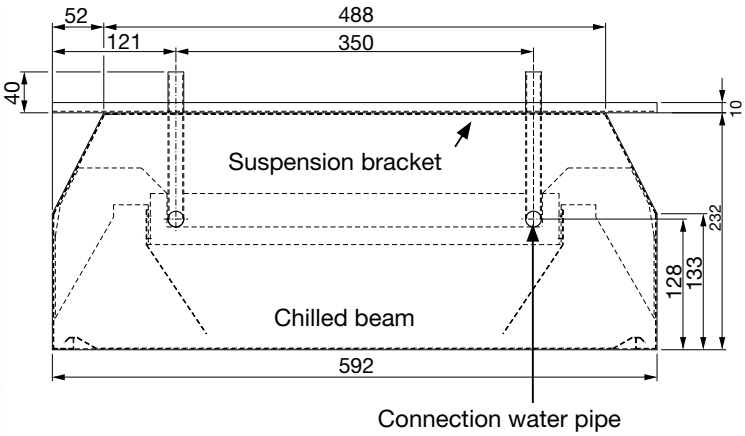

Table 4. Cabinett A 42, F 42 and K 60, dimensions & connections.

We reserve the right to make changes

Chilled beam Cabinett

Material data

Type	Cabinett A 42, F 42 and K 60
Water content, l/m	1.3
Copper pipes, connection	o.d. 15
Copper pipes, battery	o.d. 13.7
Copper pipes, quality	SS5015, semi-rigid
Pressure class	PN10

Table 2. Cabinett A 42, F 42 and K 60, material data.

Suspension, mm

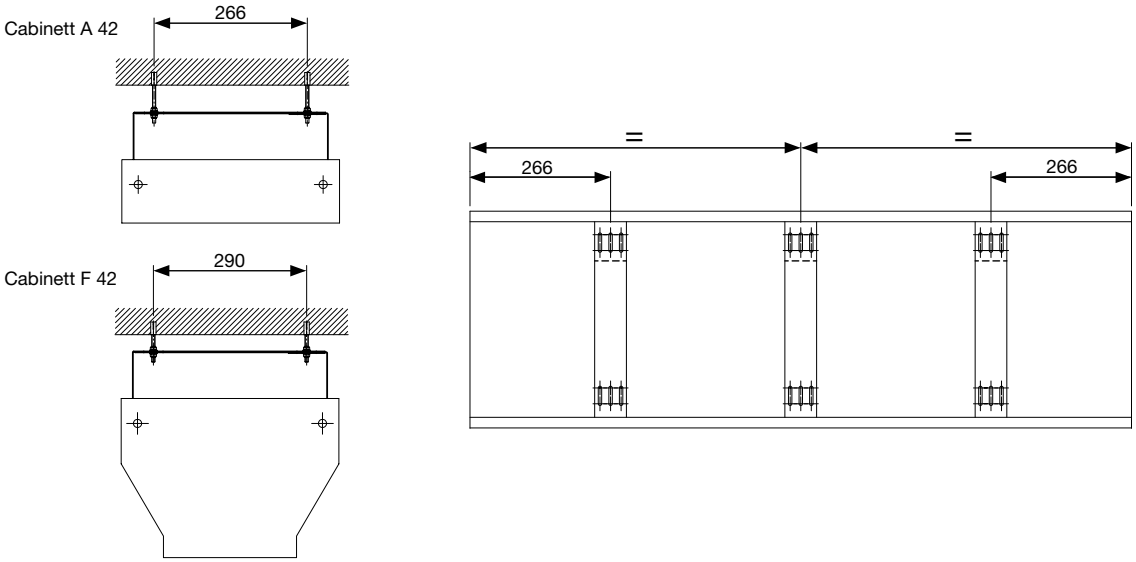

Figure 2. Cabinett A 42 and F 42 suspension, dimensions. The suspension fittings are not supplied as part of the standard package.

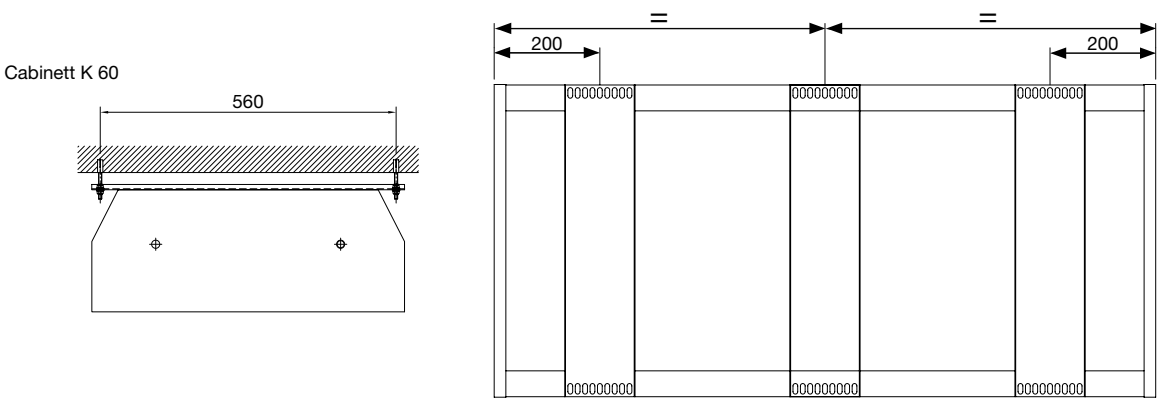

Figure 3. Cabinett K 60 suspension, dimensions. The suspension fittings are not supplied as part of the standard package.

Chilled beam Cabinett

Pressure drop in water circuit, cooling

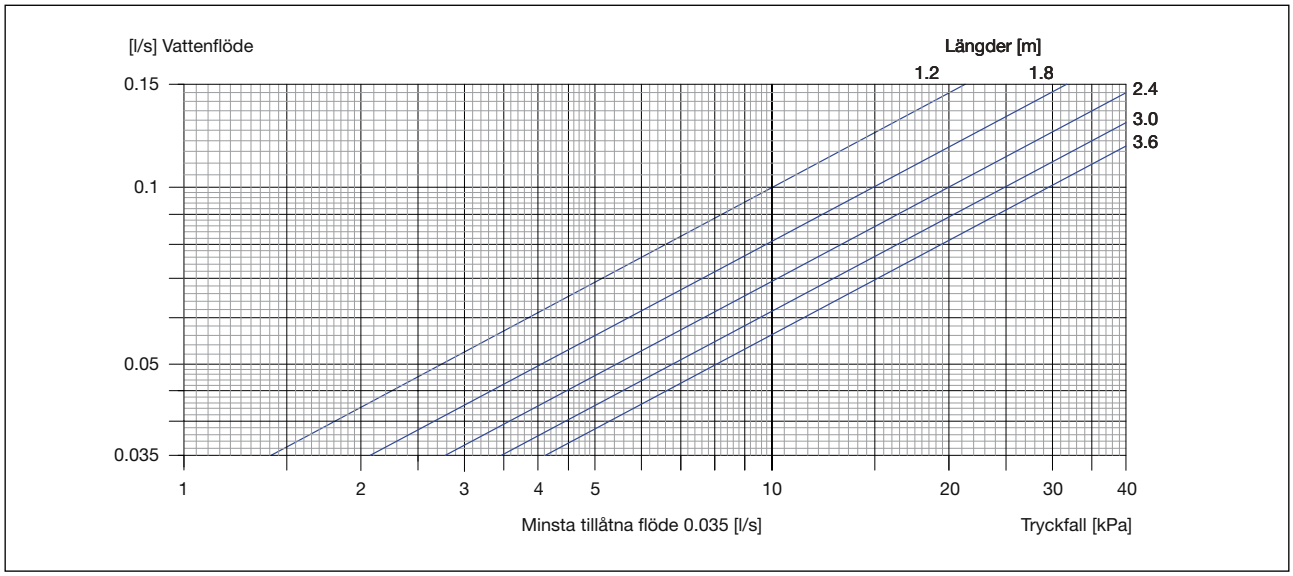

Diagram 2. Cabinett, pressure drop in water circuit, cooling.

$q_w = P / (C_p \times \Delta t)$

q_w = *water flow [l/s]*
P = *effect [W]*
C_p = *specific heat capacity [J/(kg·K)]*
Δt = *temperature difference in the water circuit in/out [K]*

Example:

Cabinett F 42 2.4 m gives an output of 583 W.
$\Delta t = 3$ *K*
$q_w = 583 / (4200 \times 3) = 0.046$ *l/s*
The pressure drop in the water circuit in diagram 2 is read off as 4.6 kPa.

We reserve the right to make changes

Chilled beam Cabinett

Control

Lindab offers control equipment that is very simple to use. To avoid heating and cooling being activated at the same time, the systems are controlled sequentially (Regula Combi). It is also possible to control only the heating or the cooling (Regula Mono). For the technical data, refer to the chapter Regula.

Colour

As standard, Cabinett is powder-coated in white, RAL 9010, gloss value 30. Other colours may be ordered specially.

Designations

Product/Version:	Cabinett A-42, F-42 and K 60
Width, [cm]:	42 or 60
Connection diam. water, [mm]:	15
Coupling options:	Water: 1. 2
Length, [m]:	Length in metres
Plus features:	See page 329

Programme text

Chilled beams from Lindab	**Qty**
Product:	
Cabinett A-42 - 15 - 1- 2.0 m	20
Plus features:	
Drypac	
Regula Secura	
Control valve, cooling	
Actuator, cooling	
Product:	
Cabinett F-42 – 15 – 1- 3.0 m	40
Plus features:	
Drypac	
Air vent	
Product:	
Cabinett K-60 – 15 – 1 – 1.8 m	30
Plus features:	
Drypac	
Air vent	
Accessories:	
Regula Combi:	20

Chilled beam

Capella

Contact, Overview, Index	1
Ceiling Heating/Chilled	2
Plexus	3
Professor	4
Pilot	5
Architect	6
Polaris I & S	7
Plafond	8
Podium	9
Celo	10
Cabinett	11
Capella	12
Carat	13
Fasadium	14
Atrium H & C /Loggia	15
Regula	16
Drypac™	17
Lighting	18
TEKNOsim	19

© 04.2009 Lindab Ventilation A/S. All forms of reproduction without written permission are forbidden. Lindab® is the registered trademark of Lindab AB.
Lindab's products, systems, product and product group designations are protected by intellectual property rights (IPR).

Chilled beam Capella

Use

Lindab's natural convection beam Capella is the lightest chilled beam available on the market. Podium is Capella's sister product; the difference between the two beams is that Podium also uses supply air.

Capella is mounted on the ceiling and supplies cooling through natural convection and radiation, which results in a draught-free climate.

35% of the cooling supplied by Capella comes from radiation while the rest from convection. Compared to a conventional beam, Capella provides a significantly higher cooling effect at lower room temperatures.

Capella can be provided with the following features: Regula Secura condensation guard, valves and actuators, etc. The product offers many possibilities and great flexibility. Capella can be coated in any colour.

Installation

Capella is installed either suspended or recessed into a ceiling.

Capella can be delivered with different connection options. The connection dimensions depend on whether the chilled beams are to be mounted individually or in series.

Worth noting

Capella is the lightest chilled beam on the market, a beam 6.0 m long with a width of 53 cm that weighs only 28.8 kg. Capella has flat and easily accessible surfaces, which contributes to good indoor hygiene. Furthermore, the Capella's height is only 130 mm, which provides to great freedom of placement. Lindab's chilled beams are Eurovent-certified and tested according to EN-15116, EN-14518

Key figures

Length:	1.2 – 6.0 m
Width:	170 mm (17) 350 mm (35) and 530 mm (53)
Height:	130 mm
Capacity:	Cooling effect of 620 W

Chilled beam Capella

1 2 3 4 5 6 7 8 9 10 11 12 13 14 15 16 17 18 19

Function

As cold water passes through the chilled beam, the warm air from the room is cooled against the cold surface of the beam. The cooled air, which is heavier, then streams through the chilled beam and down into the room. This causes air to circulate in the room, as warm air from the room is continually replaced by colder air. However, this is where the similarities with other chilled beams cease. There are two decisive factors that are distinguished by their functionality:

1. Compared with other brands, Lindab's world-patented technology provides direct heat exchange between the cold surfaces of the chilled beam and the warm surfaces of the room via long-wave radiation. The radiation quotient for Capella is roughly 30 to 35 % of the total effect. This is a high radiation quotient, compared to conventional beams with finned batteries, and it results in a lower flow of chilled air beneath the beam. This, in turn, reduces the risk of draughts under the beam.
2. Compared to a conventional beam, Capella provides a significantly higher cooling effect at lower room temperatures. The reason for this is that the convective heat transfer in the gills of the chilled beam does not decrease at the same rate, as the heat transfer in the vertical ribs in a conventional beam, when the room temperature falls during the day. As a result, Capella can provide a higher cooling effect during the day, and thereby store more "cooling energy" in the building structure. If Capella and a conventional beam yield the same output at a temperature difference of 10° C between the mean coolant temperature and the air in the room, Capella provides a 40 % higher cooling effect than the conventional beam, when the temperature difference has dropped to 5° C.

The direct heat exchange, via the high radiation quotient, with the surfaces of the room and the relatively high cooling effect, even at lower room temperatures, allows a large amount of "cooling energy" to be stored in the building structure during the day. As a result, Capella provides a lower room temperature than would be provided by a conventional cooling beam.

Design

The Capella's design is based on Lindab's world-patented method of metallurgically bonding copper and aluminium. The aluminium plate that makes up the cooling fin is also metallurgically bonded to the copper duct that transports the cold water. The shape of the copper pipe allows the easy creation of turbulent currents. This, together with the contact between the copper and the aluminium, boosts to the maximum the energy transport from the cooling surfaces to the cooling water.

The metallurgical bond between the copper and the aluminium also eliminates any risk for galvanic corrosion that could possibly be caused by condensation on the surfaces. Capella provides a high cooling effect per surface unit, which leads to resource-efficiency and a low weight for the product. Capella is made of 100% recyclable materials.

The water pipes are made of copper. Nevertheless, the water should be oxygen-free to prevent corrosion.

Picture 1. Capella 17, 35 and 53.

We reserve the right to make changes

Chilled beam Capella

Versions

Size: Capella is produced in three different widths - 170 (width 17), 350 (width 35) and 530 mm (width 53), all of which have a height of 130 mm.

Lengths: Capella is available in lengths from 1.8 m to 6.0 m in steps of 0.1 m.

Water connection: Capella can be supplied with four connections, depending on the width of the product – 10, 12, 15 and 22 mm. This allows the pressure drop to be adjusted for different dimensioning cases.

Surface treatment: Capella is powder-coated as standard in RAL 9010.

Plus features

Factory preinstalled.

Colour: Capella can be coated in various special colours.

Hygiene cover: A cover that prevents the formation of air currents in the space above the suspended ceiling. Available only for Capella 53 with an increased width of 592 mm.

Accessories

Delivered separately.

Control: Refer to the chapter Regula.

Wall connection option: Connection cover to conceal piping visible to a wall or between beams. The cover plate, however, provides access to the valves and actuators. Indicate the length when you place your order (see figure 1).

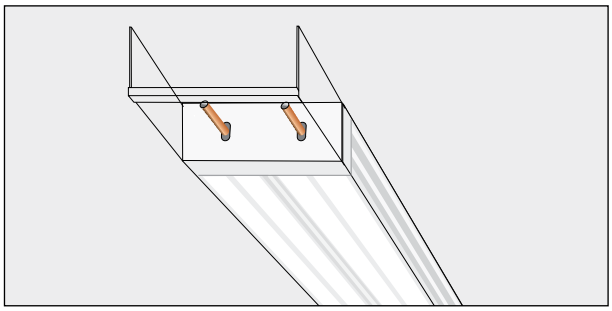

Figure 1. Capella 35 with connection cover.

Chilled beam Capella

Dimensioning

To calculate Capella's effect, follow the steps below.

1. Calculate Δt (room – mean water)
2. Read off the effect at the calculated Δt in table 2.
3. Calculate the water flow with this effect.
4. Read off the number of parallel circuits in table 1 and calculate the flow per strip.
5. Use diagram 1 to read off the effect factor at the calculated water flow per strip.
6. Multiply the effect by the effect factor.
7. Repeat steps 5 and 6.

Example
What is the cooling effect of a 4.2 m Capella 53 with Ø15 water connection?
The room's summer temperature is assumed to be 24.5° C
The cooling water temperature in/out of Capella is 14/17° C

Size	Model		
	17	35	53
Ø10	1	1	
Ø12	2	2	2
Ø15	4	4	3
Ø22			6

Table 1. Number of parallel circuits for Capella, depending on model and connection option.

Answer
The temperature difference Δt (room – mean water)
Δt = 24.5 - (14+17) / 2 = 9 K

In table 2, read off the effect for Capella 53 4.2 m and Δt = 9K. The value is 768 W.

Use this effect to calculate the water flow in Capella with the following formula: $q_w = P / (C_p \times \Delta t)$.

Where:
q_w = water flow [l/s]
P = effect [W]
C_p= specific heat capacity [J/(kg·K)]
Δt = temperature difference in the water circuit in/out [K]

q_w = 768 / (4200 x 3) = 0.061 l/s

In table 1, read off the number of parallel circuits for Capella 53 with Ø15 water connection. The value is 3. The water flow per strip will then be 0.061 / 3 = 0.02 l/s.

The effect factor, which is then read off from diagram 1, will be 0.95 and the new effect P = 768 x 0.95 = 730 W.

Calculate the new water flow using the new effect
q_w = 730 / (4200 x 3) = 0.058 l/s.

The water flow per strip will then be 0.058 / 3 = 0.019 l/s, and the effect factor approx. 0.95.

The effect factor will then be 0.95 and the cooling effect is calculated to be 730 W.

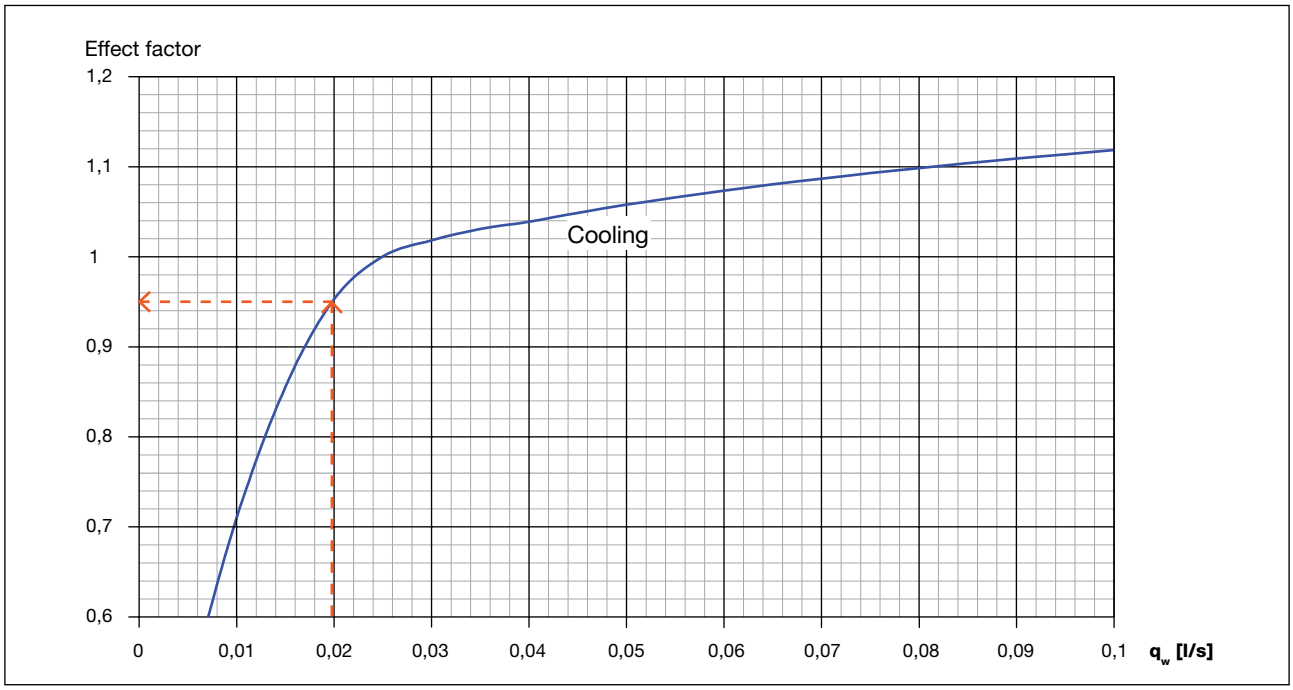

Diagram 1. Effect factor

We reserve the right to make changes

Chilled beam Capella

Cooling effect per unit (W)

Lindab presents data measured with the V-method at SP, the Technical Research Institute of Sweden in Borås.

Cooling effect per unit (W) Mean water temperature - room temperature (°C)							
	6	**7**	**8**	**9**	**10**	**11**	**12**
Length (m)	**Width 17**						
1.8	71	85	99	115	130	143	156
2.4	93	113	132	153	173	191	208
3.0	117	142	165	192	217	238	260
3.6	140	170	198	230	260	286	312
4.2	163	198	231	268	303	334	364
4.8	187	227	264	307	347	381	416
5.4	210	255	297	345	390	429	468
6.0	233	283	330	383	433	477	520
Width 35							
1.8	135	164	193	221	252	277	302
2.4	180	219	257	295	336	369	403
3.0	225	273	322	368	420	462	503
3.6	270	328	386	442	504	554	604
4.2	315	383	450	516	588	646	705
4.8	360	437	515	589	672	739	805
5.4	405	492	579	663	756	831	906
6.0	450	547	643	737	840	923	1007
Width 53							
1.8	200	241	284	329	376	414	451
2.4	267	321	379	439	501	552	601
3.0	333	402	473	548	627	690	752
3.6	400	482	568	658	752	828	902
4.2	467	562	663	768	877	966	1052
4.8	533	643	757	877	1003	1104	1203
5.4	600	723	852	987	1128	1242	1353
6.0	667	803	947	1097	1253	1380	1503

Table 2. Cooling effects for Capella 17, 35 and 53.

Chilled beam Capella

Installation examples

Capella can be installed in two different ways. Suspended or recessed in a suspended ceiling (see figures 2 to 5).

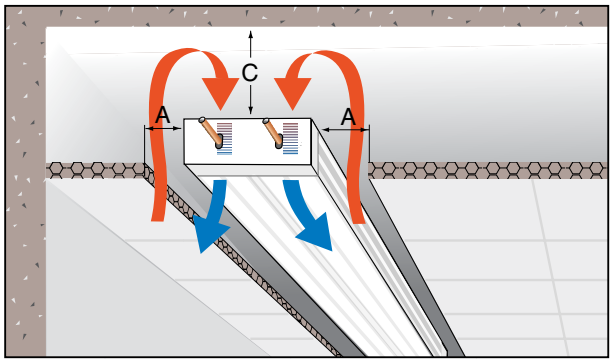

Figure 2. Installation dimensions when the room air reaches Capella from both sides.

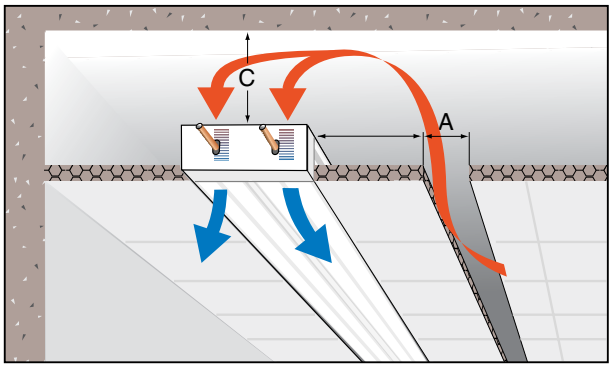

Figure 3. Installation dimensions when the room air only reaches Capella from one side.

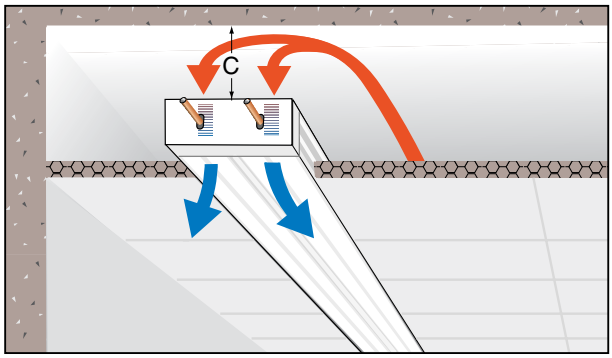

Figure 4. Installation dimensions when the room air reached Capella from another opening in the suspended ceiling.

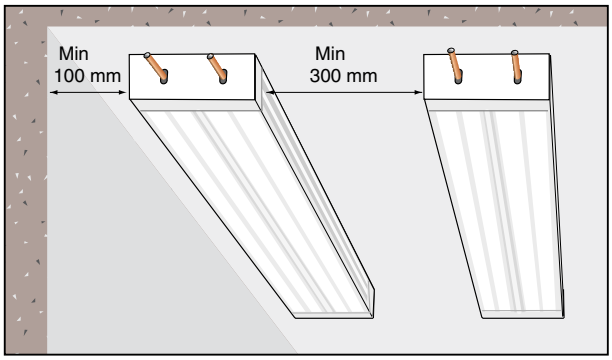

Figure 5. Minimum dimensions when beams are installed close to one another or near a wall.

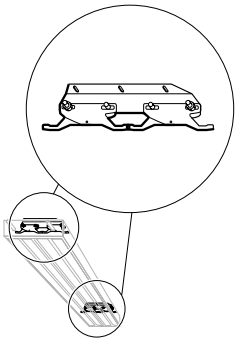

Figure 6. Installation on the ceiling

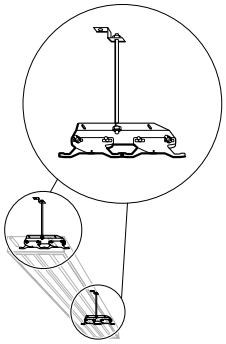

Figure 7. Suspended installation.

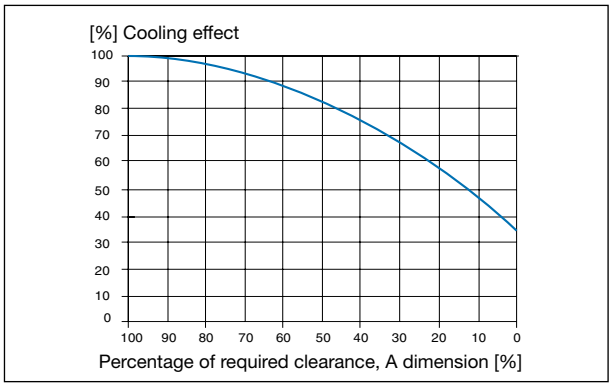

Diagram 2. Cooling effect with a reduced gap between the suspended ceiling and the chilled beam.

Installation dimensions						
	A			C		
Width	17	35	53	17	35	53
Figure 2	50 mm	70 mm	100 mm	60 mm	60 mm	80 mm
Figure 3	75 mm	105 mm	150 mm	90 mm	90 mm	120 mm
Figure 4	0.08 m²	0.11 m²	0.15 m²			
	Free opening area per m of Capella					

Table 3. Capella 17, 35 & 53 dimensions and installation.

We reserve the right to make changes

Chilled beam Capella

Couplings & connections

Width 17		Width 35		Width 53	
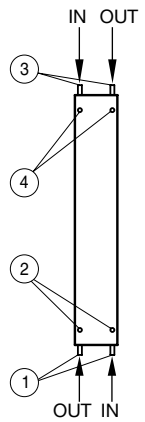		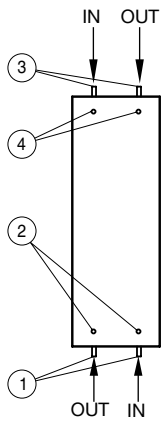		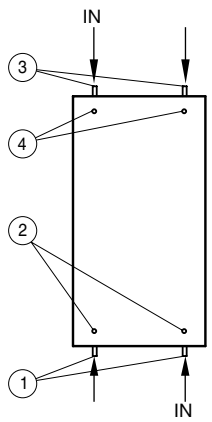	
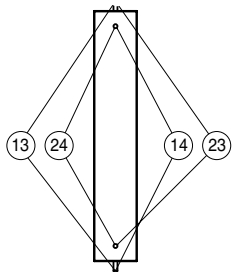		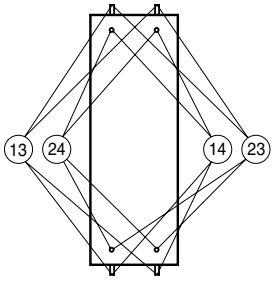		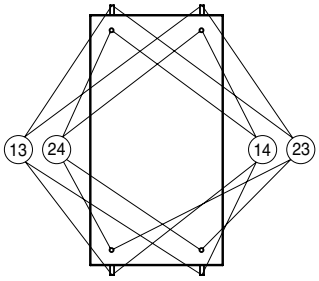	
Coupling options	Connection diameter	Coupling options	Connection diameter	Coupling options	Connection diameter
1	10 12	1	10 12 15	1	12 15 22
2	10 12	2	10 12 15	2	12 15 22
3	10 12	3	10 12 15	3	12 15 22
4	10 12	4	10 12 15	4	12 15 22
13	15	13	15	13	22
14	15	14	15	14	22
23	15	23	15	23	22
24	15	24	15	24	22

Capella from the side

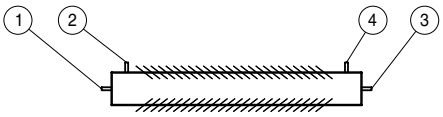

Because of the beam's "gills", its surface structure looks different, depending on from which direction it is viewed. If products connected in series are to have the same appearance, the connection point should be oriented in the same way throughout the room. Note! Connection options 13 and 24 can be turned in both directions.

Table 4. Capella 17, 35 and 54 are supplied in lengths from 1.8 m to 6.0 m in steps of 0.1 m. The connection dimension for the water is 10, 12, 15 or 22 mm.

NB! Coupling should be done with compression couplings, press couplings or Tectite.

Chilled beam Capella

Couplings & connections

Width 17		Width 35		Width 53	
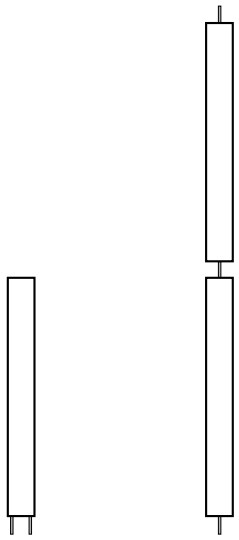		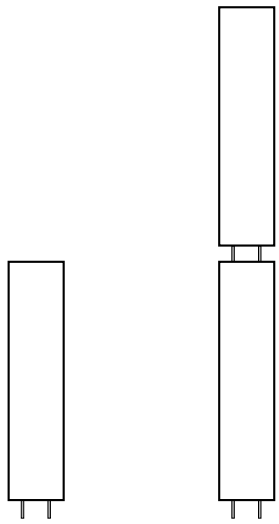		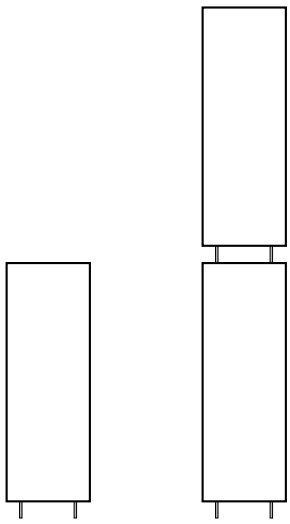	
Pipe coupling		Pipe coupling		Pipe coupling	
1	13	1	13 + 1	1	13 + 1
Connection, cooling		Connection, cooling		Connection, cooling	
Plain Cu pipe, o.d. mm		Plain Cu pipe, o.d. mm		Plain Cu pipe, o.d. mm	
10	–	10	–	12	–
12	–	12	–	15	–
–	15	15	15	22	22

Table 5. Overview of the connection dimensions for water, Capella 17, 35 & 53.

Width & height, mm

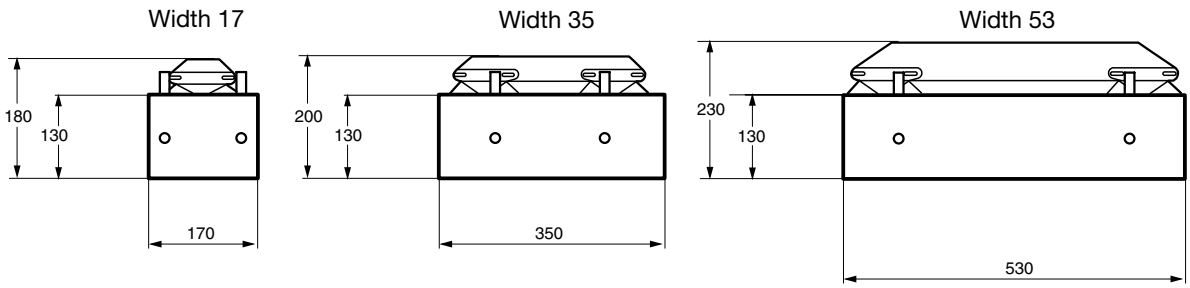

Figure 8. Capella Classic is produced in three different widths and one height.

We reserve the right to make changes

Chilled beam Capella

Length, mm:

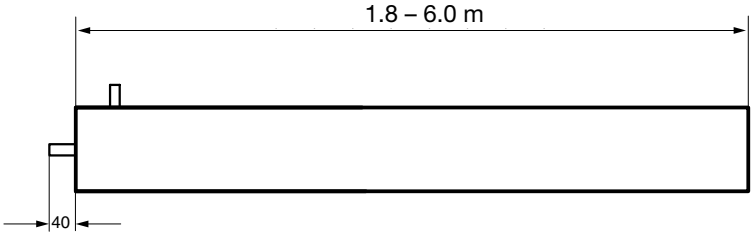

Figure 9. Capella is produced as standard in lengths from 1.8 m to 6.0 m in steps of 0.1 m. Actual dimensions are -8 mm in order to fit a standard T-support.

Dimensions, mm

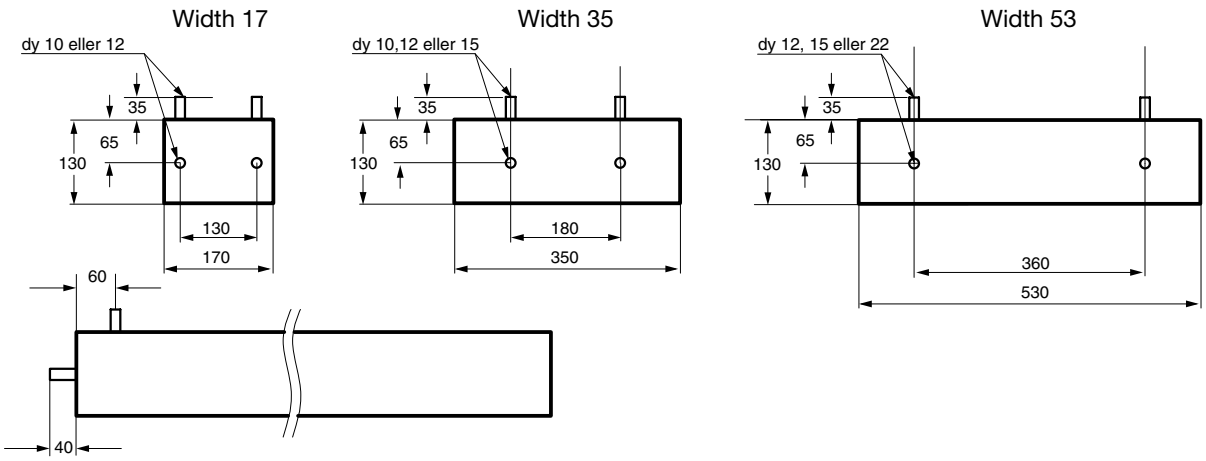

Figure 10. Capella 17, 35 and 53 dimensions.

Weight and water volume

Chilled beam width, cm	17	35	53
Weight, kg/m	1.6	3.2	4.8
Water content, l/m	0.25	0.50	0.75

Table 6. Capella 17, 35 & 53 weight and water volume.

Cooled air dispersion under the beam

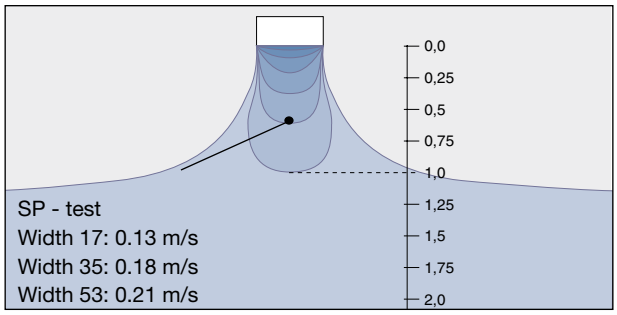

Figure 11. Cooled air dispersion under the beam. The air velocity is presented one metre under the beam, according to measurements carried out by the Technical Research Institute of Sweden.

Chilled beam Capella

Pressure drop in water circuit, cooling

Capella width 17 and 35

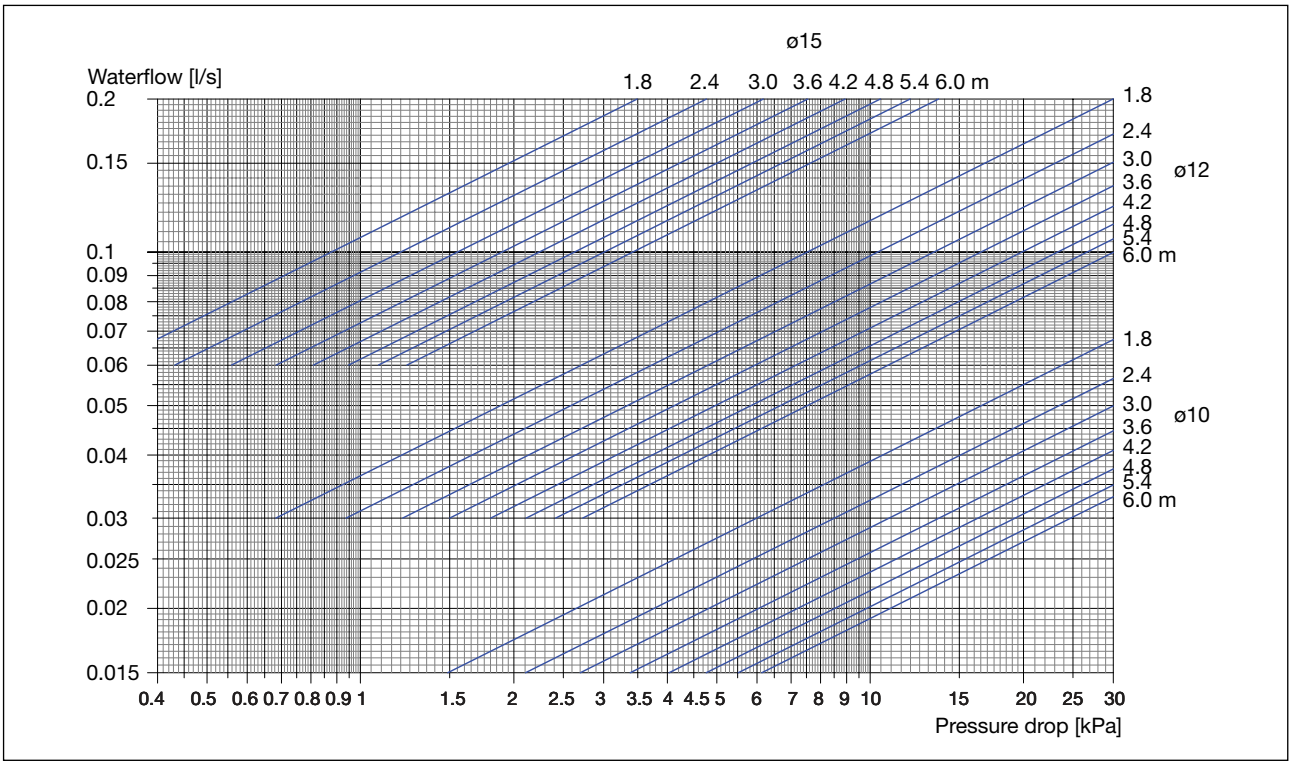

Diagram 3. Capella 17 in water circuit, cooling.

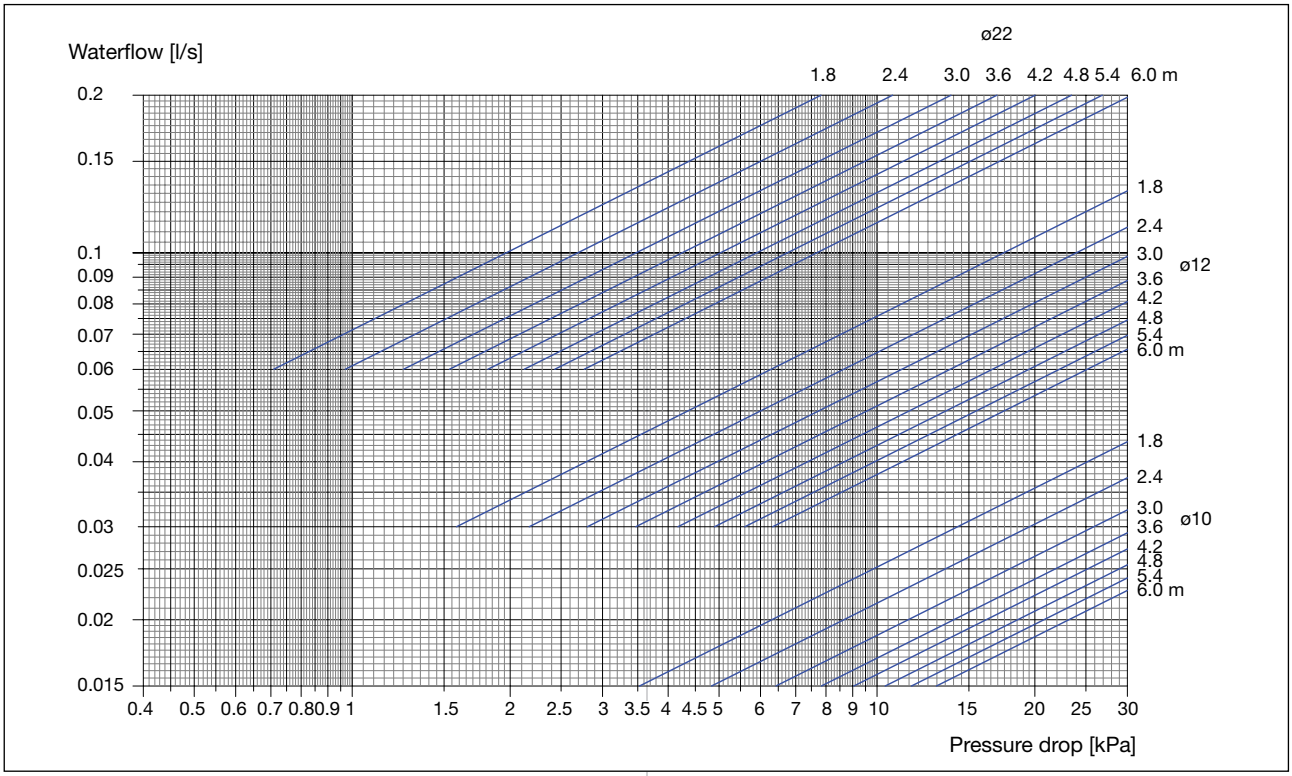

Diagram 4. Capella 35 pressure drop in water circuit, cooling.

We reserve the right to make changes

Chilled beam Capella

Pressure drop in water circuit, cooling

Capella width 53

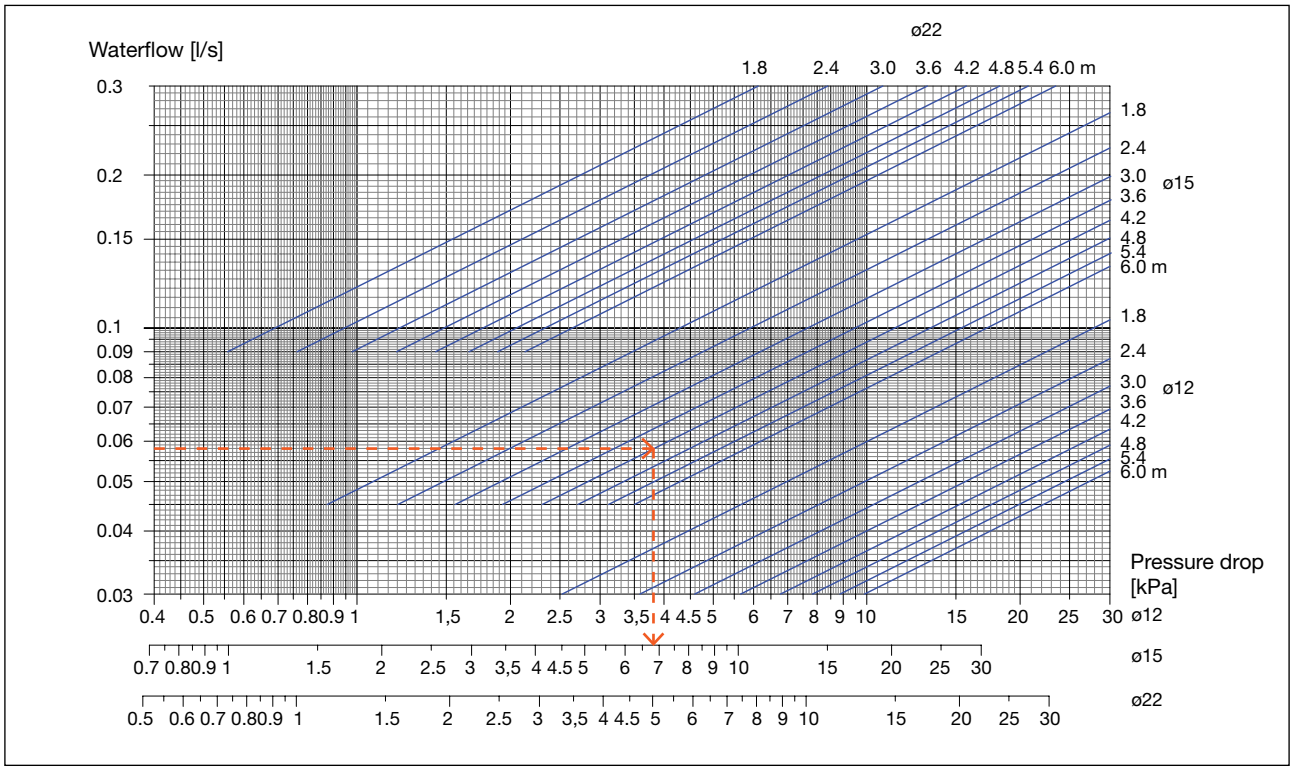

Diagram 5. Capella 53 pressure drop in water circuit, cooling.

$q_w = P / (C_p \times \Delta t)$

q_w = *water flow [l/s]*
P = *effect [W]*
C_p = *specific heat capacity [J/(kg·K)]*
Δt = *temperature difference in the water circuit in/out [K]*

Example:

Capella 53 4.2 m with Ø15 water connection supplies an output of 730 W and Δt = 3 K.
q_w = *730 / (4200 x 3) = 0.058 l/s*
The pressure drop in the water circuit in diagram 5 is read off as 6.8 kPa.

Chilled beam Capella

1 2 3 4 5 6 7 8 9 10 11 12 13 14 15 16 17 18 19

Control

Lindab offers control equipment that is very simple to use. To avoid heating and cooling being activated at the same time, the systems are controlled sequentially (Regula Combi). It is also possible to regulate only the heating or the cooling (Regula Mono). For the technical data, refer to the chapter Regula.

Colour

As standard, Capella is powder-coated in white, RAL 9010, gloss value 30. Other colours may be ordered specially.

Designations

Product:	Capella
Width, [cm]:	17, 35, 53
Connection diam. water, [mm]:	10, 12, 15, 22
Coupling options:	1, 2, 3, 4, 13, 14, 23, 24
Length, [m]:	1.8 - 6.0
Plus features:	See page 341

Programme text

Chilled beams from Lindab	**Qty**
Product:	
Capella - 17 - 10 - 1 – 3.0 m	12
Plus features:	
Colour, RAL 9005 (black):	
Accessories:	
Connection cover, length = 100 mm:	12
Product:	
Capella - 35 - 12 - 1 – 3.6 m	20
Accessories:	
Regula Combi:	20
Regula Secura:	20
Control valve, cooling:	20
Actuator, cooling:	20
Product:	
Capella - 53 - 22 - 1 – 6.0 m	10
Plus features:	
Colour, RAL 9005 (black):	
Accessories:	
Regula Combi:	10
Regula Secura:	10
Control valve, cooling:	10
Actuator, cooling:	10

We reserve the right to make changes

Chilled beam

Carat

Contact, Overview, Index	1
Guideline heating and cooling	2
Plexus	3
Professor	4
Pilot	5
Architect	6
Polaris I & S	7
Plafond	8
Podium	9
Celo	10
Cabinett	11
Capella	12
Carat	**13**
Fasadium	14
Atrium H & C /Loggia	15
Regula	16
Drypac™	17
Lighting	18
TEKNOsim	19

© 11.2009 Lindab Ventilation A/S. All forms of reproduction without written permission are forbidden. Lindab® is the registered trademark of Lindab AB.
Lindab's products, systems, product and product group designations are protected by intellectual property rights (IPR).

Chilled beam

Carat

Use

Lindab's chilled beam Carat is placed above a perforated suspended ceiling and supplies cooling, with a low air velocity, to the room below.

Carat has a high radiation quotient of approx. 35% (compared to approx. 5% for traditional finned products). This gives great freedom in placing, when installing Carat, yet keeps air velocities low.

Carat can be used for cooling. It can be equipped with the Regula Connect condensation guard feature. It offers many possibilities and great flexibility. For example, it is possible to paint Carat any colour you want.

Installation

Carat is installed suspended or above a perforated suspended ceiling.

Carat can be supplied with different connection options, depending on whether the passive beam is to be installed individually or in series.

Worth noting

The radiation quotient of Carat is as high as 35%, which results in low air velocities when the beam is placed above a perforated suspended ceiling. A low air velocity ensures a good indoor climate and eliminates the risk of draft problems.

Lindab's chilled beams are Eurovent-certified and tested according to EN-15116, EN-14518.

Key figures

Length:	1.2 – 6.0 m
Width:	309 mm (31). 440 mm (44), 572 mm (58), 706 mm (71) and 838 mm (84)
Product height:	147 mm
Capacity:	Cooling effect of 978 W

1 2 3 4 5 6 7 8 9 10 11 12 13 14 15 16 17 18 19

Chilled beam

Carat

1
2
3
4
5
6
7
8
9
10
11
12
13
14
15
16
17
18
19

Radiation exchange in chilled beams creates no air movement

Function

As cold water passes through the chilled beam, the warm air from the room is cooled on the cold surface of the beam. The cooled air (which has a higher density) then streams through the chilled beam and down into the room (see Picture 2). This leads to air circulation in the room, where warm air from the room is continually replaced by cooled air. The cold surfaces of the beam also absorb heat radiation from warmer surrounding surfaces.

The high radiation quotient leads to direct heat exchange between the cold surfaces of the beam and the warm surfaces in the room. The radiation quotient for Carat is approx. 35% of the total emitted cooling effect. This is a high quotient, compared to conventional finned battery beams, which have a radiation quotient of approx. 5%.

Direct heat exchange, through a high quotient of radiation to the room surfaces, and a high cooling effect, even at lower room temperatures, allows a large amount of cold to be stored efficiently in the building structure during low-load periods. The overall result is that Carat gives off more cooling energy during a 24-hour period than a finned battery beam. This means that a lower room temperature can be achieved.

Optimal design

Construction

Carat is a chilled beam that absorbs heat by both radiation and convection. By optimising the beam's radiation quotient, output has been increased by 50% compared to finned battery beams, without increasing the risk for drafts.

Carat is based on a method that is unique in the world: in a cold-rolling process, the copper pipe is connected by metallurgical bonding to a gilled aluminium sheet. The energy transfer between the cooling surface and the water circuit is made more efficient, which results in a high cooling effect per surface unit. The technology for the metallurgical bonding of copper and aluminium renders galvanic corrosion impossible.

Carat is available in widths from 31 cm to 84 cm. The length can vary from 1.2 m to 6.0 m.

Carat provides a high cooling effect per surface unit, which leads to resource-efficiency and a low weight for the product. Carat is made of 100% recyclable materials.

The water pipes are made of copper. Nevertheless, the water should be oxygen-free to prevent corrosion.

Easy to clean

Hygiene

Carat's surface area is four times smaller than that of a corresponding finned battery beam with the same performance. All parts of the product are accessible for cleaning and inspection. These qualities, together with the relatively strong aluminium plate, make Carat easy to wipe and clean.

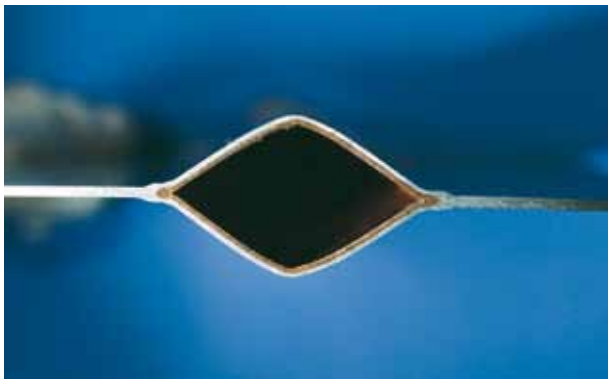

Picture 1. Cross-section of Lindab's unique strips. The rhomboid shape provides an efficient heat-transfer surface.

Picture 2. How Carat works.

We reserve the right to make changes

Chilled beam

Carat

Versions

Size: Carat is available in five widths: 31, 44, 58, 71 and 84 cm (see Pictures 4 to 9, on page 356). All models are 147 mm high.

Installation: Carat is mounted horizontally.

Lengths: Carat is available in lengths from 1.8 m to 6.0 m, in steps of 0.1 m.

Water connection: Carat is available with a variety of connection dimensions, 10, 12, 15, 22 and 28 mm, depending on the product's width and connection options.

Surface treatment: Carat is powder-coated; the standard colour is white, RAL 9010.

Plus features

Factory preinstalled.

Colour: Carat can be coated in a variety of special colours (see picture 3).

Edge protection: For visible installation.

Accessories

Delivered separately.

Control: Refer to separate brochure, Regula.

Picture 3. Carat with black coating, a plus feature.

Chilled beam

Carat

Versions

Picture 4. Carat -31

Picture 5. Carat -44

Picture 6. Carat -58

Picture 7. Carat -71

Picture 8. Carat -84

We reserve the right to make changes

Chilled beam Carat

Dimensioning - Cooling effect when installed above a perforated suspended ceiling.

Example 1
What is the output of a 3 m Carat -44 that is placed above a perforated dropped ceiling?

The temperature difference between the room temperature and the average water temperature is assumed to be 10°C. The perforations in the ceiling consist of 4 mm holes, with a degree of perforation of 28%. The ceiling consists of perforated panels with a total area of 5.4 m². The total ceiling area is 12 m².

Find the intersection point for the lines at 28% and 4 mm in diagram 1. Follow the line to the left, from the intersection point, and read off the effect on the left scale for Carat -44. The value is 16. [W/m² °C].

This gives: 16. [W/m°C] × 3 m × 10° C = 480 W.

The effect applies for the nominal water flow per strip q_w = 0.025 l/s. To obtain a flow-adjusted effect, refer to steps 3 to 8 on the next page.

You should check what the maximum output is for the suspended ceiling. Go straight to the right, from the intersection point for the lines at 28% and 4 mm, and read off the value on the scale. The value is 11.5 [W/m² °C].

This gives 11.5 [W/m² °C] × 10°C × 5.4 m² = 621 W. The maximum cooling output from the ceiling is higher than what the product gives.

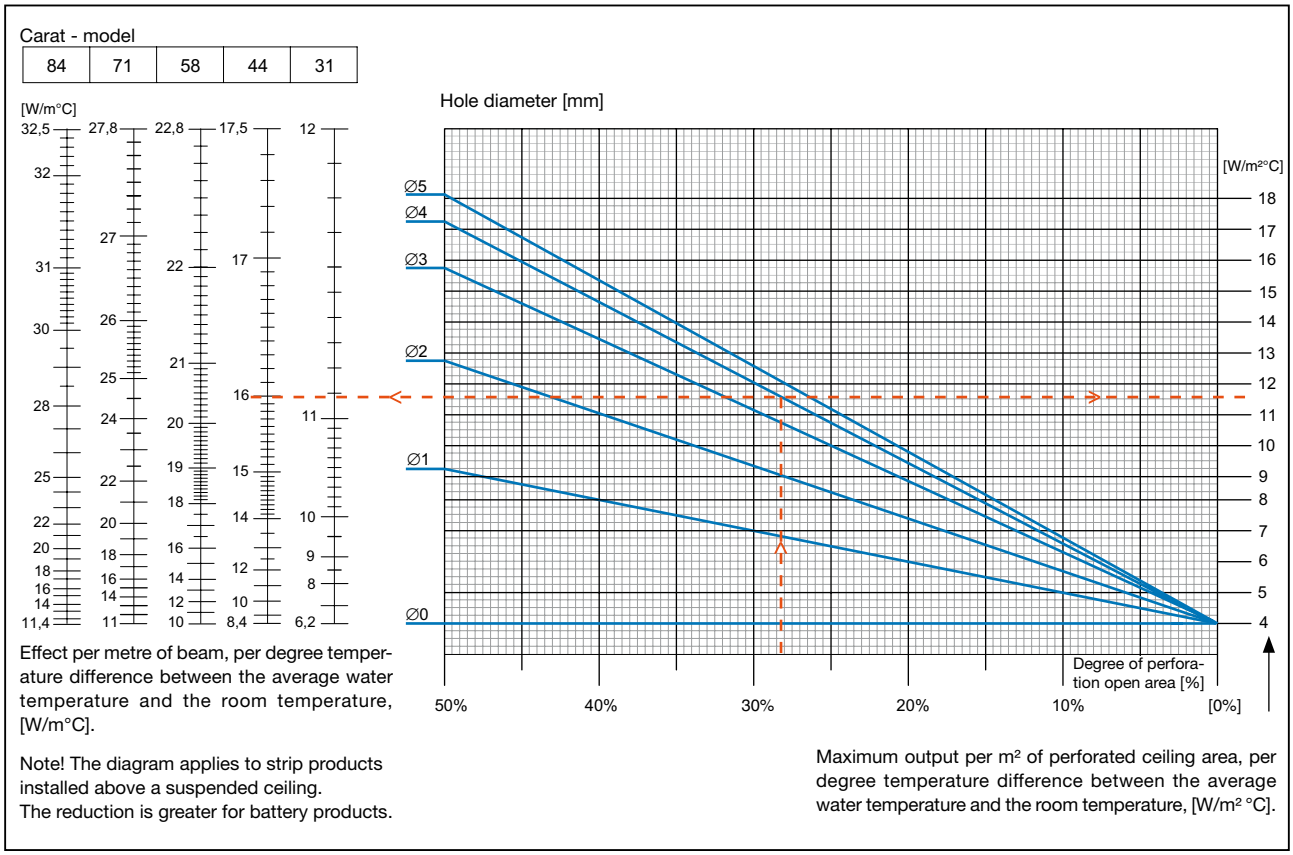

Diagram 1. Carat, cooling effect when installed above a perforated suspended ceiling.

Chilled beam Carat

1 2 3 4 5 6 7 8 9 10 11 12 13 14 15 16 17 18 19

Dimensioning - Cooling effects for suspended installation

To calculate Carat's effect, follow the steps below.

1. At Δt (room – average water)
2. Read off the effect per metre and °C in table 1.
3. Calculate the water flow using this effect.
4. Read off the number of parallel circuits in table 2.
5. Calculate the water flow per strip.
6. Read off the effect factor in diagram 2.
7. Multiply the effect by the effect factor.
8. Repeat steps 3 to 7.

Example 2
What is the cooling effect of a 3.6 m Carat 58 with ø12 mm water connection?
The room summer temperature is assumed to be 24.5° C
The cooling water temperature in/out of Carat is 14/17° C

Answer
Temperature difference Δt = room – average water
Δt = 24.5 - (14+17) / 2 = 9 K

Model	Effect (W/m°C)
Carat -31	12
Carat -44	17.5
Carat -58	22.8
Carat -71	27.8
Carat -84	32.5

Table 1. Carat, effect per metre and °C.

Read off the effect for Carat 58, in table 1. The value is 22.8 [W/m °C].
Effect (P) = 22.8 x 9 x 3.6 = 739 W.
Calculate the water flow using this effect, with the following formula:
$q_w = P / (Cp \times \Delta t)$

Where:
q_w = water flow [l/s]
P = effect [W]
C_p = specific heat capacity [J/(kg·K)]
Δt = temperature difference in the water circuit in/out [K]
q_w = 739 / (4200 x 3) = 0.059 l/s

Read off the number of parallel circuits for Carat 58 with Ø12 water connection in table 2. The value is 2. The water flow per strip will be 0.059 / 2 = 0.029 l/s.
The effect factor, read off from diagram 2, will then be 1.015 and the new effect P = 739 x 1.015 = 750 W.
Calculate the new water flow using the new effect
q_w = 750 / (4200 x 3) = 0.0595 l/s.
The water flow per strip will then be 0.0595 / 2 = 0.029 l/s, and the effect factor approx. 1.015.
The effect factor read off is 1.015, and the heating effect is then calculated to be 750 W.

Size	Model				
	31	44	58	71	84
ø10	1	1	1	1	1
ø12	2		2		2
ø15	4	3	4	5	3
ø22		6	8	10	6
ø28					12

Table 2. Number of parallel circuits for Carat, depending on model and connection alternative.

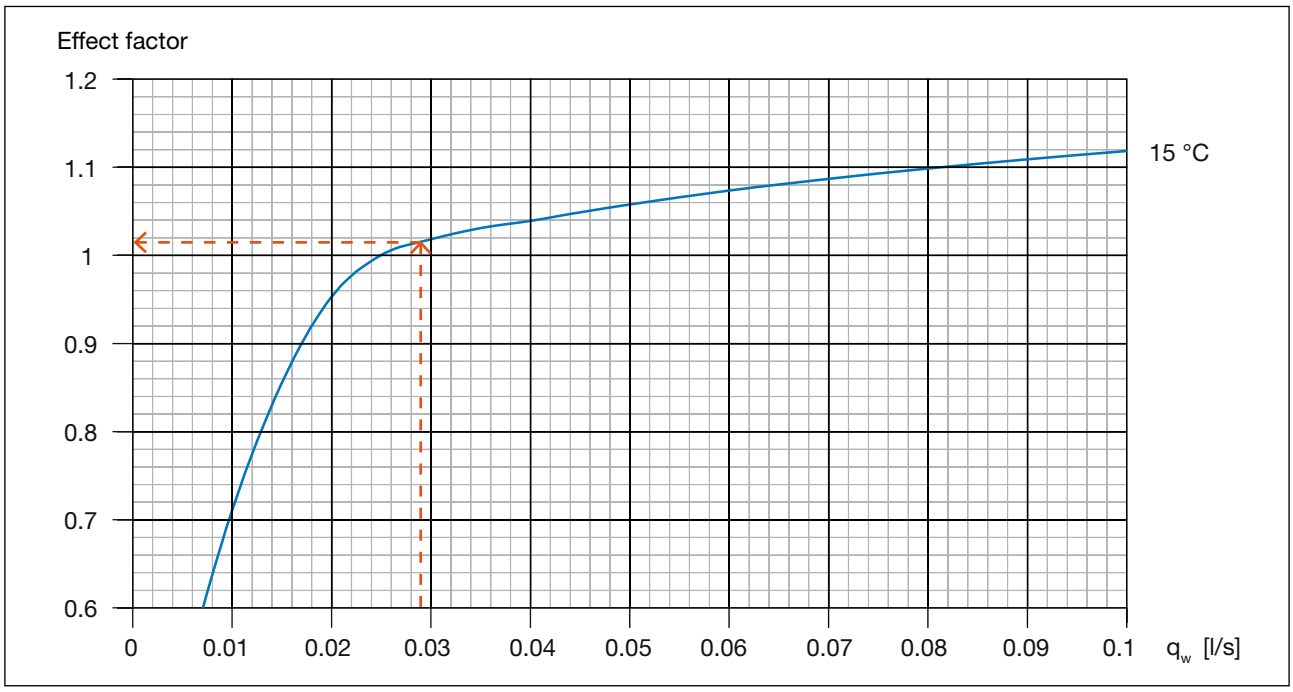

Diagram 2. Effect factor, depending on flow per strip, average water temperature = 15° C.

We reserve the right to make changes

Chilled beam

Carat

Air velocities in the living area, depending on the cooling effect

Extensive measurements show that if Carat is placed above a metal perforated suspended ceiling, air velocities in the occupied zone are reduced, compared to a suspended product. The extent of the reduction depends on the suspended ceiling's degree of perforation. Diagram 3 shows the air velocities for Carat with different cooling effects for four different perforations, as well as for suspended installation of Carat and for finned battery beams. The output is also reduced compared to a suspended installation. For cooling effects, refer to diagram 1.

Air velocities are reduced when Carat is placed above a metal perforated suspended ceiling, the reason for this is that the perforated sheet is cooled by the increased radiation exchange between Carat and the perforated metal. Moreover, the cold air spreads under the beam and increases the area of the cold surface. At the same time, the volume of air that passes through the perforated ceiling decreases; i.e. there is a change from convection to radiation. Radiation exchange in chilled beams does not create any air movement.

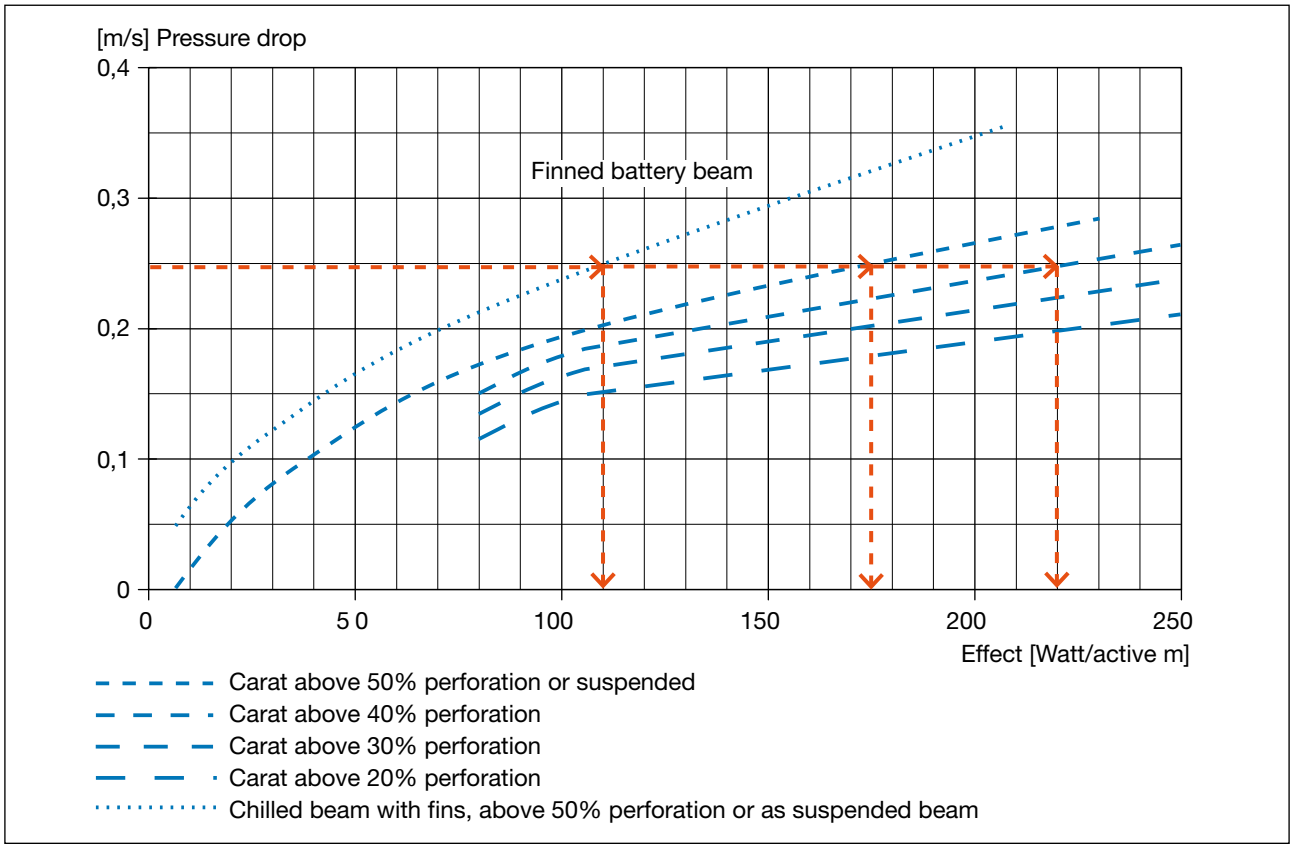

Diagram 3. Air velocity as a function of cooling effect for chilled beams.

Chilled beam Carat

Couplings & connections

Coupling options	Model	Connection options (mm)	Minimum flow (l/s)
	Carat -31	10 12	0,015 0,03
	Carat -44	10 15	0,015 0,045
	Carat -58	10 12 15	0,015 0,03 0,06
	Carat -71	10 15	0,015 0,075
	Carat -84	10 12 15 22	0,015 0,03 0,045 0,09
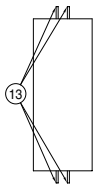	Carat -31	12	0,03
	Carat -44	15	0,045
	Carat -58	15	0,06
	Carat -71	15	0,075
	Carat -84	22	0,09
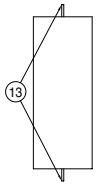	Carat -31	15	0,06
	Carat -44	22	0,09
	Carat -58	22	0,12
	Carat -71	22	0,15
	Carat -84	28	0,18

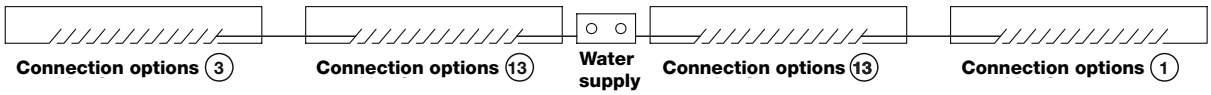

Due to of the beam's "gills", its surface structure looks different, depending on the direction from which it is viewed. If products connected in series are to have the same appearance, the connection point should be oriented in the same direction throughout the room. Note! Connection option 13 can be turned in both directions.

Table 3. Carat's couplings & connections.

Weight & water content

Table 4 shows

Model	Carat 31	Carat 44	Carat 58	Carat 71	Carat 84
Weight, [kg/m]	1.7	2.5	3.3	4.2	5.0
Water content, [l/m]	0.4	0.5	0.7	0.9	1.06

Table 4. Carat's weight & water content.

We reserve the right to make changes

Chilled beam Carat

Carat's width & height, mm

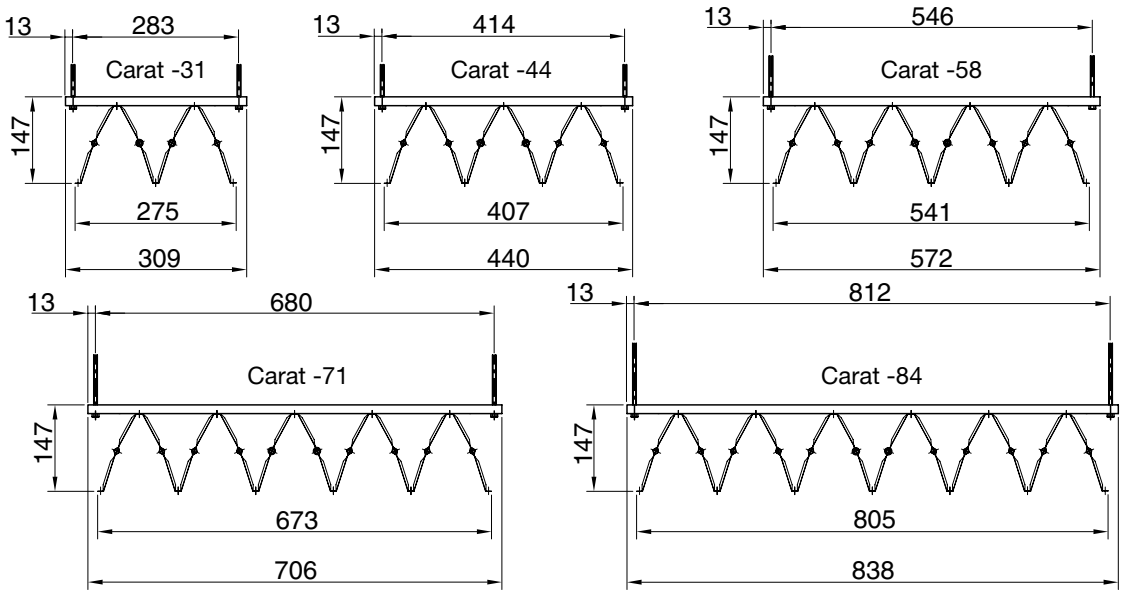

Length, mm:

As standard, Carat is available in lengths from 1.8 m to 6.0 m, in steps of 0.1 m.

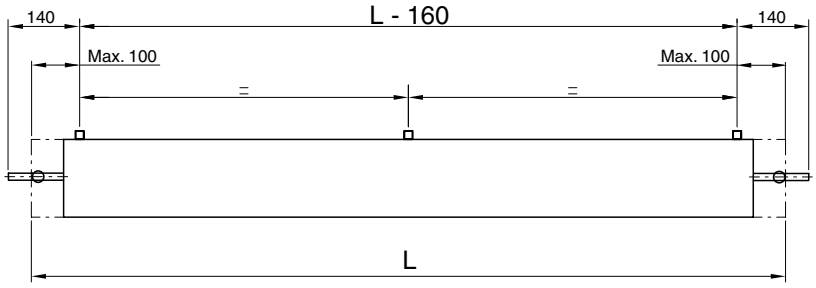

3 × 2 suspension points for lengths > 3 m.

Connection dimensions, mm

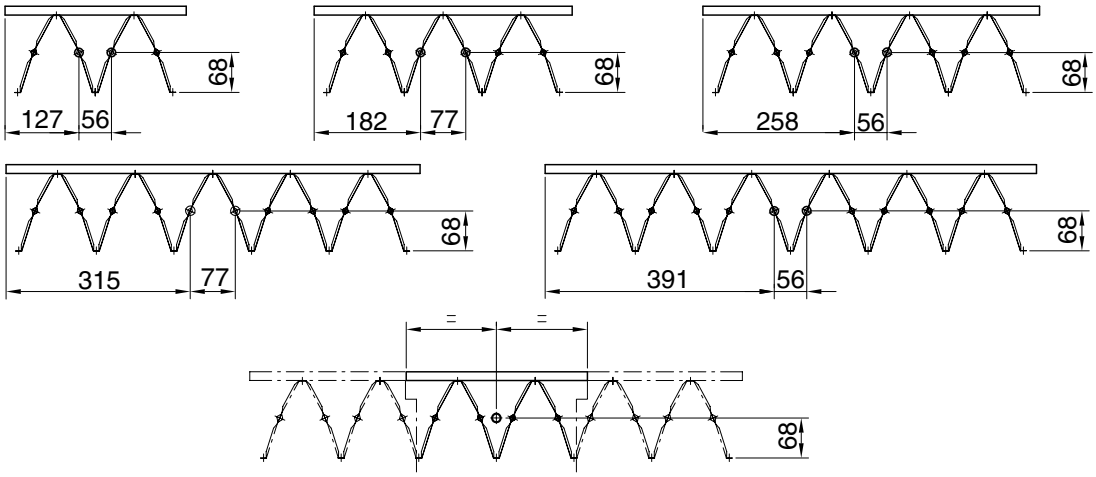

Figure 1. Carat, width, height, length and connection dimensions.

Chilled beam

Carat

1 2 3 4 5 6 7 8 9 10 11 12 13 14 15 16 17 18 19

Installation examples

Carat has a wide range of applications and can be installed in offices, exhibition halls and industrial premises or warehouses. Carat is suitable for both visible and hidden installation. Hidden installation above a perforated suspended ceiling is the most common in office environments. During installation, it is important that the separation between the product and the ceiling be large enough. Otherwise, the output can be reduced because of insufficient air intake. The minimum acceptable distance varies depending on the width of the product. Table 5 and figures 2 to 4 list the minimum installation dimensions that are required for each model, so as to avoid a reduction in Carat's efficiency. If the minimum installation dimensions are not met, the cooling effect of Carat must be reduced in accordance with diagram 4.

Carat is light, and this makes the product easy to handle during installation. There are two suspension options for Carat. Carat can be installed using either a suspended wire or a threaded rod. Both the suspended wire and the threaded rod are easy to adjust, so as to achieve the necessary measurement between the product and the ceiling.

Model	A (mm)	B (mm)	C (mm)
Carat -31	45	192	232
Carat -44	55	202	252
Carat -58	70	217	267
Carat -71	85	232	302
Carat -84	105	252	322

Table 5. Minimum installation dimensions, required by the respective models, to avoid a reduction in Carat's efficiency.

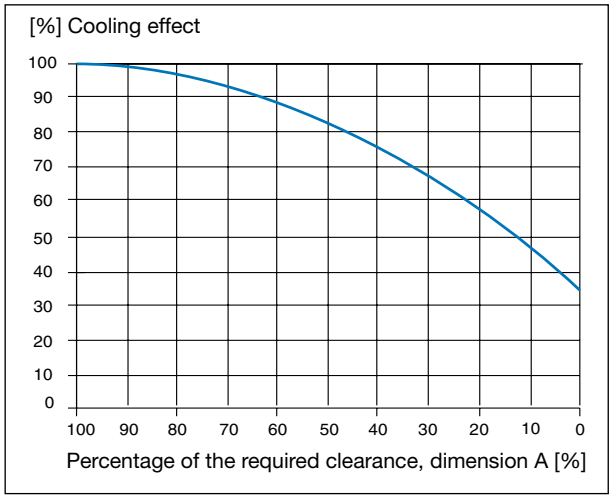

Diagram 4. Reduction of the cooling effect when dimension A is reduced.

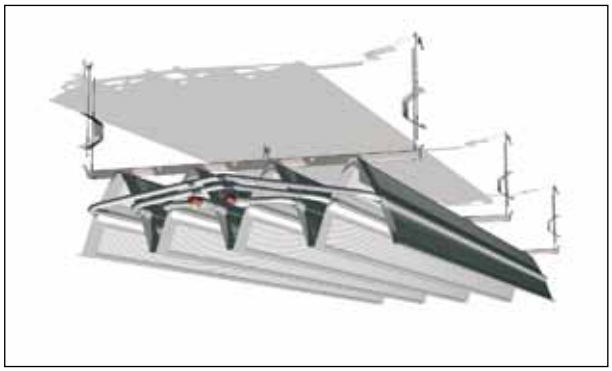

Picture 8. Installation of Carat with a suspended wire.

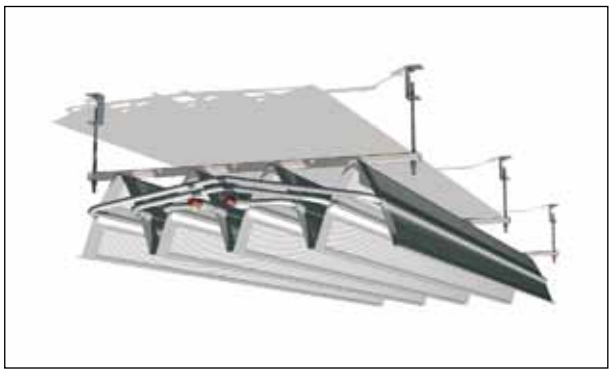

Picture 9. Installation of Carat with a threaded rod.

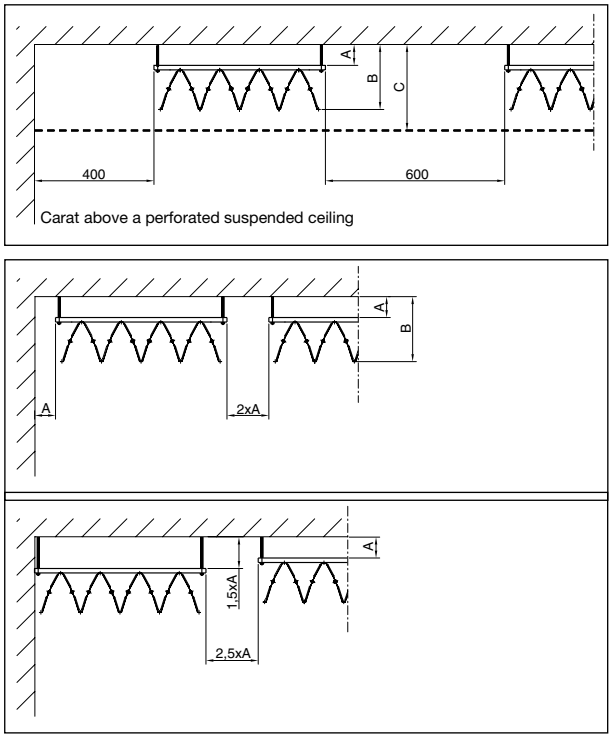

Figure 2-4. Installation dimensions for Carat.

NB! To achieve low air velocities as per diagram 3, the distance between the beams should be at least 600 mm.

We reserve the right to make changes

Chilled beam Carat

Pressure drop in water circuit, cooling

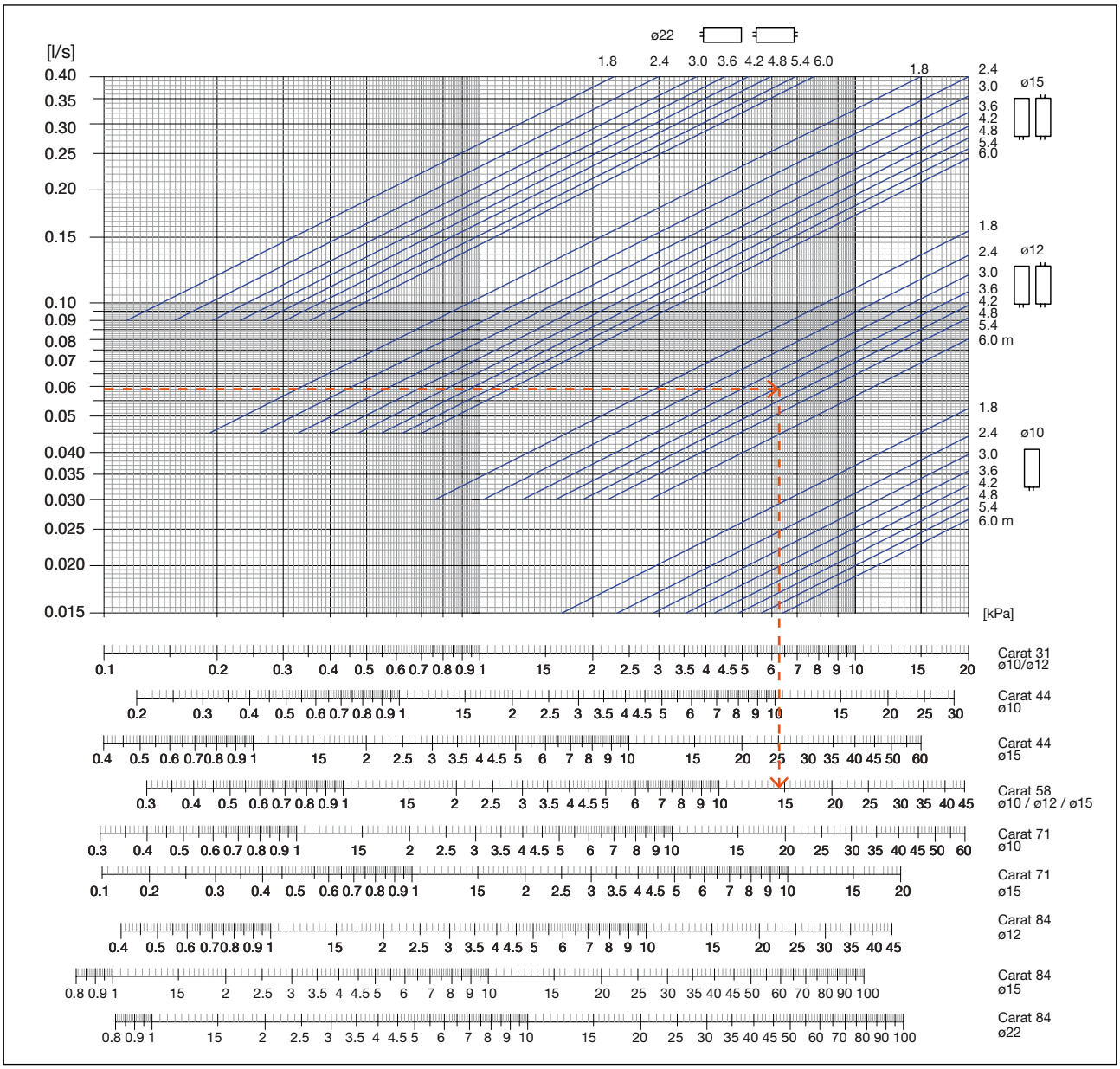

Diagram 4.

1. Calculate the total water flow in the circuit.
2. Read off the pressure drop, from diagram 4.

$q_w = P / (Cp \times \Delta t)$
q_w = *water flow [l/s]*
P = *effect [W]*
C_p = *specific heat capacity [J/(kg·K)]*
Δt = *temperature difference in the water circuit in/out [K]*

Example:

A 3.6m Carat 58-12-1 gives an output of 750 W.
$\Delta t = 3$ *K*
$q_w = 750 / (4200 \times 3) = 0.0595$ *l/s*
The pressure drop in the water circuit is read off as 14.7 kPa.

Chilled beam Carat

Pressure drop in water circuit, cooling

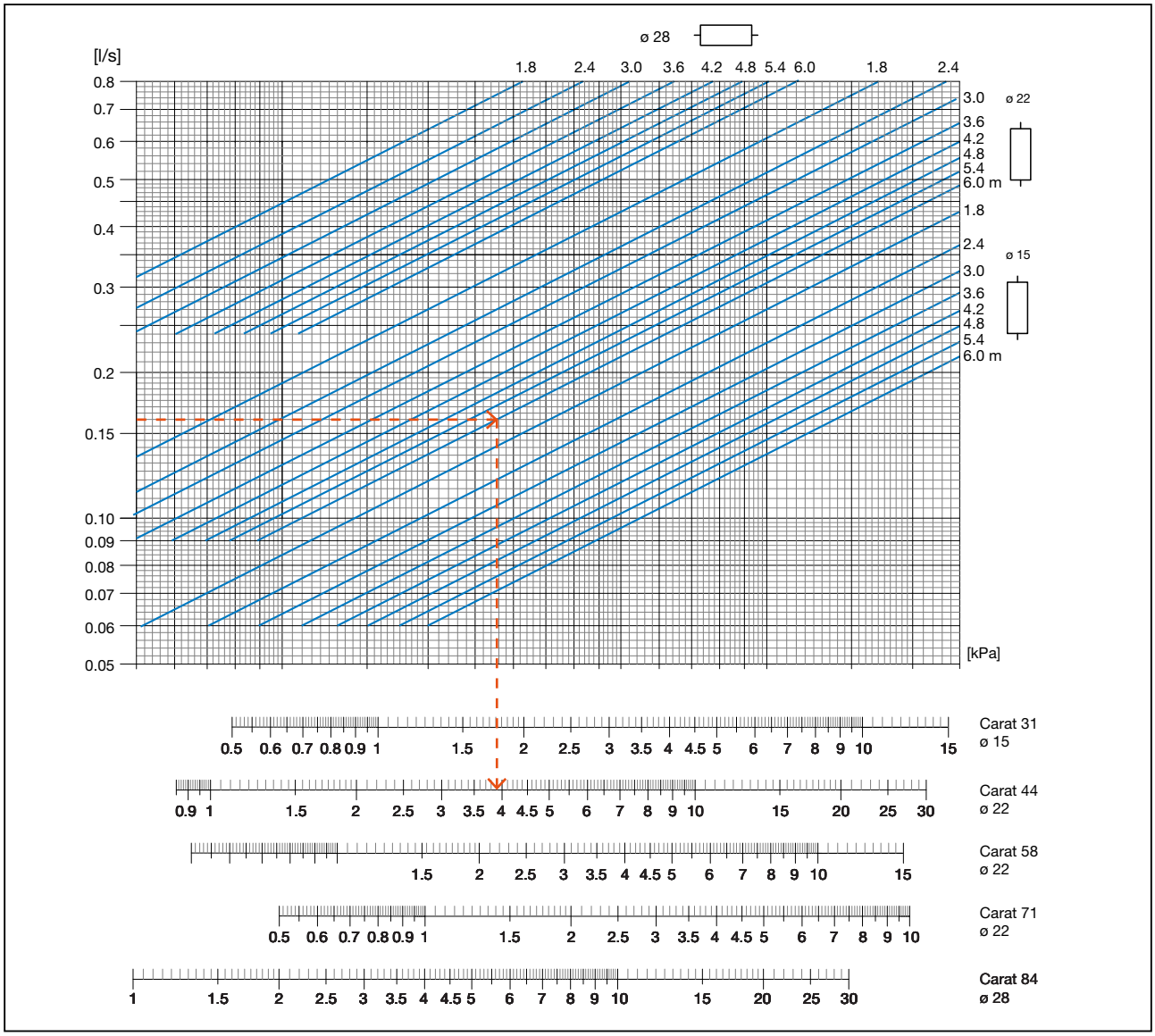

Diagram 5.

Products connected in series

1. Calculate the total water flow in the circuit.
2. Read off the pressure drop, for each individual product, with the total flow.
3. Add the pressure drop, for each individual product.
4. Add the pressure drop, for the other components.

q_w = P / (Cp x Δt)
q_w = water flow [l/s]
P = effect [W]
C_p = specific heat capacity [J/(kg·K)]
Δt = temperature difference in the water circuit in/out [K]

Example:

A total of 2 kW must be supplied to a room, with a temperature difference of 3° C between the supply and return water.

2 6 m long Carat -44-22-13 are selected.

The water flow in the circuit will be:

2000 / (4200 × 3) = 0.16 [l/s]

Read off the pressure drop: 3.9 kPa

Add the pressure drop for each individual product:

3.9 + 3.9 = 7.8 kPa

We reserve the right to make changes

Chilled beam

Carat

Control

Lindab offers control equipment that is very simple to use. To avoid the heating and cooling being activated at the same time, the system is controlled sequentially (Regula Combi). It is also possible to control only the heating or the cooling (Regula Mono). For the technical data, refer to the chapter Regula.

Colour

As standard, Carat is powder-coated in RAL 9010, gloss value 30. Other colours may be ordered specially.

Designations

Product:	Carat
Width:	31, 44, 58, 71, 84 cm
Connection dimensions, water:	10, 12, 15, 22, 28 mm
Coupling options:	1, 3, 13
Length:	Length in metres
Plus features:	See page 355

Programme text

Chilled beams from Lindab	**Qty**
Product:	
Carat -58-15-1, 3 m	10
Plus features:	
Colour, RAL 9005 (black)	
Accessories:	No.
Product:	
Carat -71-15-13, 2.4 m	25
Plus features:	
Edge protection	
Accessories:	
Regula Combi	25
Regula Secura	25
Cooling control valve	25
Cooling actuator	25
Product:	
Carat -71-15-1, 2.4 m	10
Plus features:	
Edge protection	
Accessories:	
Regula Combi	10
Regula Secura	10
Cooling control valve	10
Cooling actuator	10

Fasadium

Contact, Overview, Index	1
Guideline heating and cooling	2
Plexus	3
Professor	4
Pilot	5
Architect	6
Polaris I & S	7
Plafond	8
Podium	9
Celo	10
Cabinett	11
Capella	12
Carat	13
Fasadium	14
Atrium H & C /Loggia	15
Regula	16
Drypac™	17
Lighting	18
TEKNOsim	19

© 02.2010 Lindab Ventilation A/S. All forms of reproduction without written permission are forbidden. Lindab® is the registered trademark of Lindab AB.
Lindab's products, systems, product and product group designations are protected by intellectual property rights (IPR).

Fasadium

Use

Lindab's facade system Fasadium is an efficient system designed to handle low air pressures. Typical environments where Fasadium is used include, for example, schools, hospitals and offices.

Fasadium can be used for cooling, heating and ventilation. Fasadium is supplied as standard with valves, flexible pipe connections and a connection card for the Regula Connect control system. Additional features that can be integrated into Fasadium include, for example, Regula Combi and the Regula Secura condensation guard.

Installation

Fasadium is placed along the facade, behind built-in window sills.

Fasadium is available both as a standard model and as a low model for use where space is critical.

Worth noting

Fasadium is developed for an operating pressure of up to 250 Pa. Fasadium utilises counter-flow heat exchange. The system is provided with a service hatch, which provides full access to the whole battery and helps maintain good hygiene.

Lindab's facade system Fasadium has been tested at the Technical Research Institute of Sweden (SP).

Key figures

Width:	600, 700, 800, 1000, 1200 and 1500 mm
Height:	Low - 400, 460, 500 mm
	Standard - 540, 600 and 640 mm
Depth:	240 mm
Capacity:	Cooling effect of 990 W
	Heating effect of 2370 W
	(At 150 Pa and 1.5 m)

Fasadium

Function

Fasadium is a facade system with a heating, cooling and ventilation functions. For installation there are supplementary parts for heating, cooling and ventilation (see under System Accessories). Fasadium uses the supply air's driving power, which through induction creates a flow of air through the battery, thereby ejecting cooled or heated air from the system (see picture 1).

On the water side, the individual room temperature is controlled by an electronic control system, Regula Combi, with the heating and cooling in sequence. The control feature ensures that the heating and cooling are not activated at the same time.

Fasadium provides high cooling effects at operating pressures of 100 to 250 Pa. Fasadium has been tested according to the V method at the Technical Research Institute of Sweden. Additional functions include a condensation guard, Regula Secura, which prevents condensation formation, and a service hatch that provides the maximum accessibility to the battery for cleaning and inspection.

Design

Fasadium's technical design provides the maximum output. The heating and cooling battery is installed to ensure counter-flow heat exchange between the incoming room air and the cooling water in the battery.

This technical solution provides high cooling effects, while allowing the supply cooling water temperature to be kept low, without condensation problems.

Fasadium's end plates, sides and air duct are made from galvanized sheet steel. A service hatch is located on the front edge of the system. All of the heating and cooling battery is accessible for cleaning from both sides through this service hatch. When open, it also provides access to all the ventilation duct's intake nozzles.

The battery has separate circuits for cooling and heating water. The circuits are made from copper pipe that has been expanded mechanically to ensure contact with the aluminium ribs. The battery is mounted horizontally and is easily accessible for cleaning. The water circuits are pressure-tested along their entire length to 1.8 MPa for pressure class NT 10. The cooling feed pipe is insulated against condensation.

To protect the system further against condensation, a condensation guard can be installed. The condensation guard provides significantly increased security against condensation. The Regula Secura condensation guard is positioned next to the battery to detect the formation of moisture. If condensation does form, the cooling water circuit valve closes to prevent it. Then, it re-opens to detect what output can be achieved without condensation forming.

The water pipes are made of copper. Nevertheless, the water should be oxygen-free to prevent corrosion.

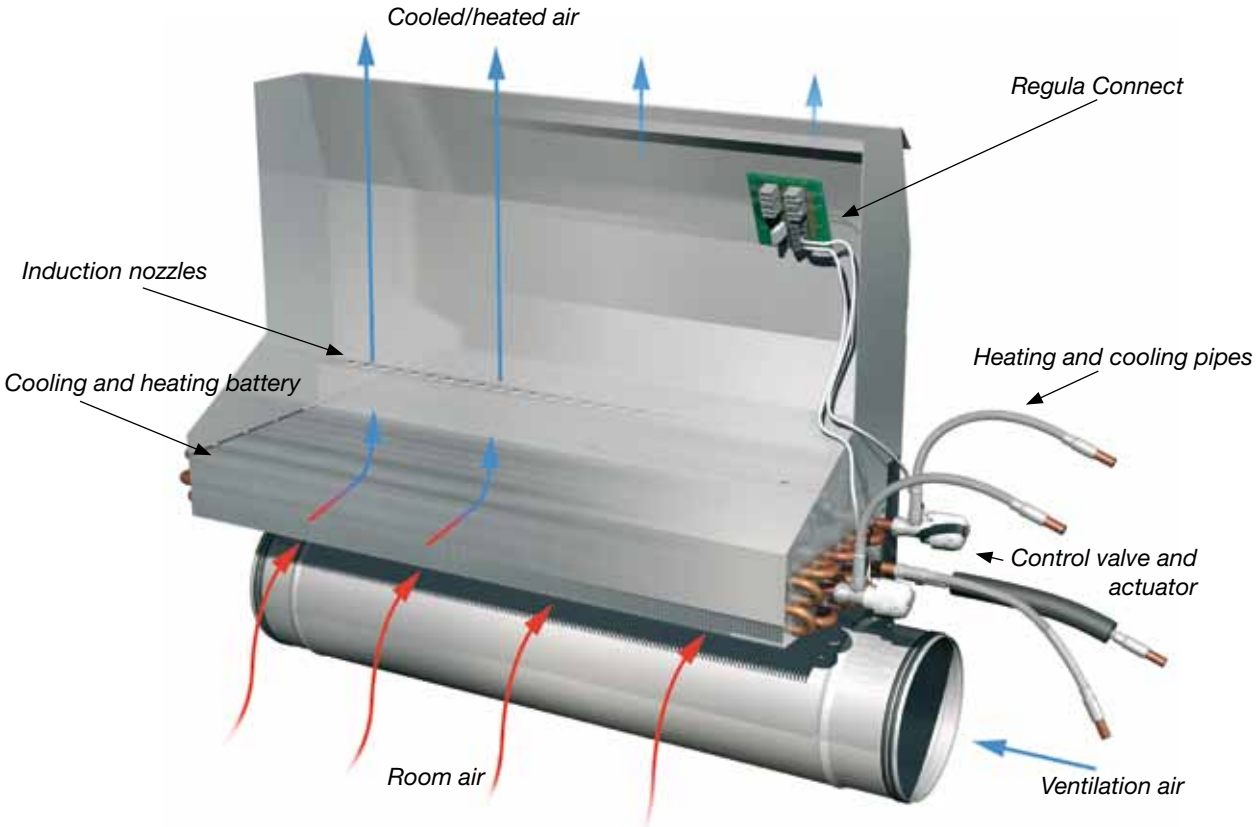

Picture 1. Fasadium uses the supply air's driving power, which through induction creates an air flow through the battery, thereby ejecting cooled or heated air from the system.

We reserve the right to make changes

Fasadium

Hygiene

Fasadium is designed for easy cleaning and service. The service hatch provides unrestricted access to the system's battery both from above and below.

On delivery, the system's battery is shielded with protective wrapping and the outlet with protective tape. This prevents dust and dirt from getting into the system before it is put into operation.

Picture 2. Cleaning is easy with the service hatch on the front.

Initial settings

The facade system is supplied with the ordered airflow at a given air pressure. On-site adjustment is therefore not required. The Kv value of the control valves is preset at the factory (standard). If necessary, the airflow and pressure drop on the water side can also be adjusted on site.

Picture 3. Fasadium installed with columns.

Picture 4. Fasadium installed without columns.

Fasadium

Casing suggestions

Lindab supplies the facade system without casing. Below are suggestions for three types of casing with different types of wood.

When Fasadium is installed with columns, the whole system is moved away from the facade so the piping and trunking pass in front of the column, see figure 1 and 2.

Standard

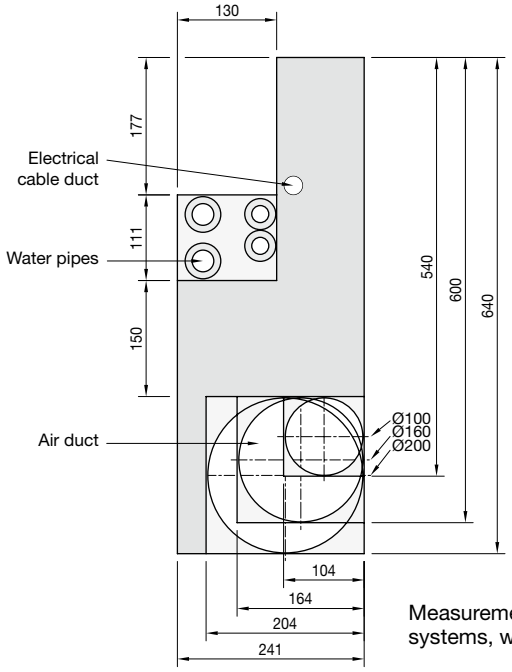

Figure 1.

Low

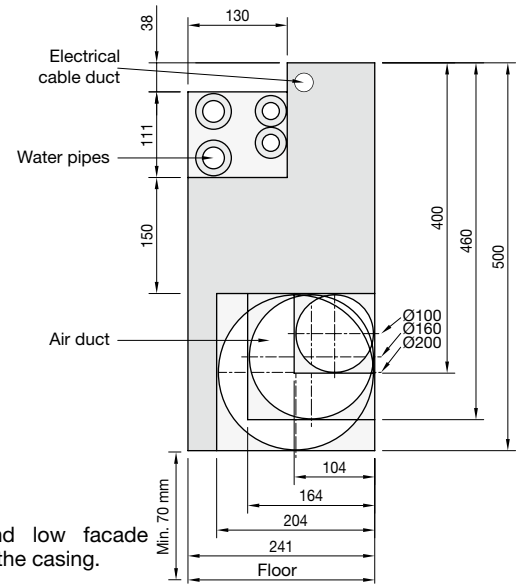

Figure 2.

Measurements for standard and low facade systems, with a view to adjusting the casing.

Picture 5. Casing with a worktop fitted with a hatch that is lifted to provide access.

Picture 6. Casing with fixed worktop and detachable hatch on front side.

Picture 7. Casing with fixed worktop and visible electrical cable duct.

We reserve the right to make changes

Fasadium

Control system

The room temperature control system with its pre-fabricated cabling is easy to adapt to varying room sizes and to changes in the room divisions. Operating voltage 24 V AC (see picture 8).

The Regula Combi control centre: has an ON/OFF function, with sequential heating and cooling and a fixed neutral zone, 1°C. The control centre is supplied with a neutral value of 21°C, which can be adjusted by ± 4° C. The setting range for the neutral value is within 13 to 29° C. The control centre can regulate up to 12 systems. LEDs indicate output signal, heating (red) and cooling (blue). The control centre is mounted in a 65 mm installation box or on a wall.

Actuators on thermoelectric control valves.
Function: No current closed. Time for opening and closing: approx. 4 min.

Regula Connect connection card with connectors for mains cables, thermostat cables and terminal blocks for actuator cables. The card has alternatives for the mains cable outputs, so the control signal can be transmitted to the next system in both directions or terminated at a wall. A transformer is also connected to a free port. The connection card can be accessed by lifting the system grill (applies for standard systems).

Cabling The system consists of a device cable, extension cable and thermostat cable. The cables are prefabricated and equipped with error-proof connectors.

Transformer primary 230V, secondary 24 V AC.

The Regula Secura condensation guard cuts the power to the actuator if condensation is detected (plus feature).

For more information about the control systems, refer to chapter Regula.

Versions

Standard systems

Lengths:	600, 700, 800, 1000, 1200 and 1500 mm.
Depth:	241 mm
Duct diameter:	160 mm
Height:	600 mm, with room for electrical ducting, exclusive of worktop

Options

Duct diameter:	100 mm
Height:	540 mm
Duct diameter:	200 mm
Height:	640 mm

Low model

Duct diameter:	100 mm
Height:	400 mm
Duct diameter:	160 mm
Height:	460 mm
Duct diameter:	200 mm
Height:	500 mm

Switching over control cables

When moving, building new or removing existing partitions, the control system can be reconnected (see picture 8). This is to allow the control centre to regulate the products in the room where it is installed.

The device cable consists of four conductors, two for the supply voltage and two for the control signal to the heating and cooling actuators.

The figures refer to the picture below.

1-2 Connectors for connection and relaying within the same control zone (supply voltage and control signals).
3-4 Connectors for connection and relaying to another control zone (supply voltage only).
5 Connector for connecting room thermostat (monitoring of control zone).
6 Terminal block for connecting actuators. Heating and cooling.

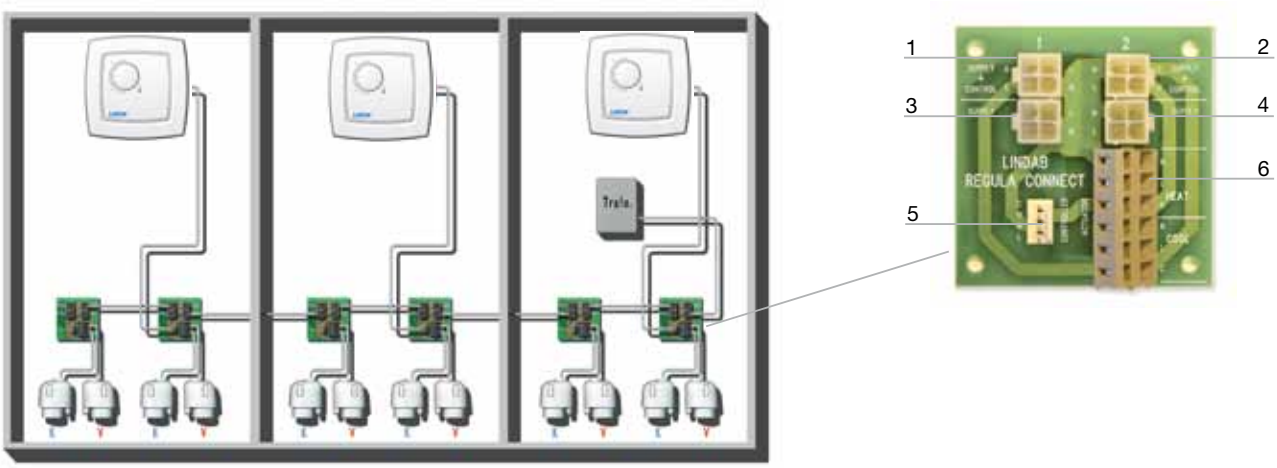

Picture 8. When existing partition walls are moved, the control system can be reconnected.

Fasadium

1
2
3
4
5
6
7
8
9
10
11
12
13
14
15
16
17
18
19

Fasadium grills

Galea is the name of Lindab's new grills for Fasadium. The grills have arched ribs for the optimum air distribution.

Galea is placed in the casings for Fasadium and is made from aluminium.

The grills are available in lengths from 600 to 1500 mm. They are available in two colours, white-coated and natural-anodised.

Designation	Size
Galea grill 600, nature	dim: 475x75 mm
Galea grill 700, nature	dim: 575x75 mm
Galea grill 800, nature	dim: 675x75 mm
Galea grill 1000, nature	dim: 875x75 mm
Galea grill 1200, nature	dim: 1075x75 mm
Galea grill 1500, nature	dim: 1375x75 mm
Galea grill 600, white	dim: 475x75 mm
Galea grill 700, white	dim: 575x75 mm
Galea grill 800, white	dim: 675x75 mm
Galea grill 1000, white	dim: 875x75 mm
Galea grill 1200, white	dim: 1075x75 mm
Galea grill 1500, white	dim: 1375x75 mm

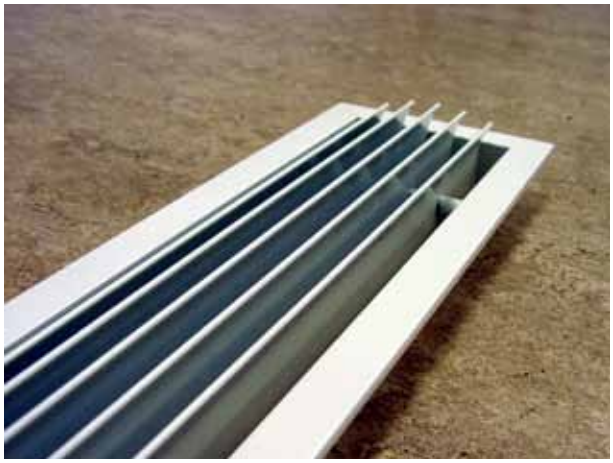

We reserve the right to make changes

Fasadium

Dimensioning

Cooling effect supplied by the ventilation air [W]

1. Start by calculating the necessary cooling effect that has to be supplied to the room to achieve a given temperature.
   Lindab's climate simulation program TEKNOsim is a great help here.
2. Calculate any cooling effect provided by the ventilation air.
3. The remaining cooling effect has to be supplied by the Fasadium.

Formula for the air cooling effect: $P = \dot{m} \times C_p \times \Delta t$

Where:
$\dot{m}$ = mass flow [kg/s]
C_p = specific heat capacity [J/(kg·K)]
q_p = air flow [l/s]
Δt = the difference between the room temperature and the temperature of the supply air [K].
It is usually $\dot{m} \times C_p \approx q_p \times 1{,}2$

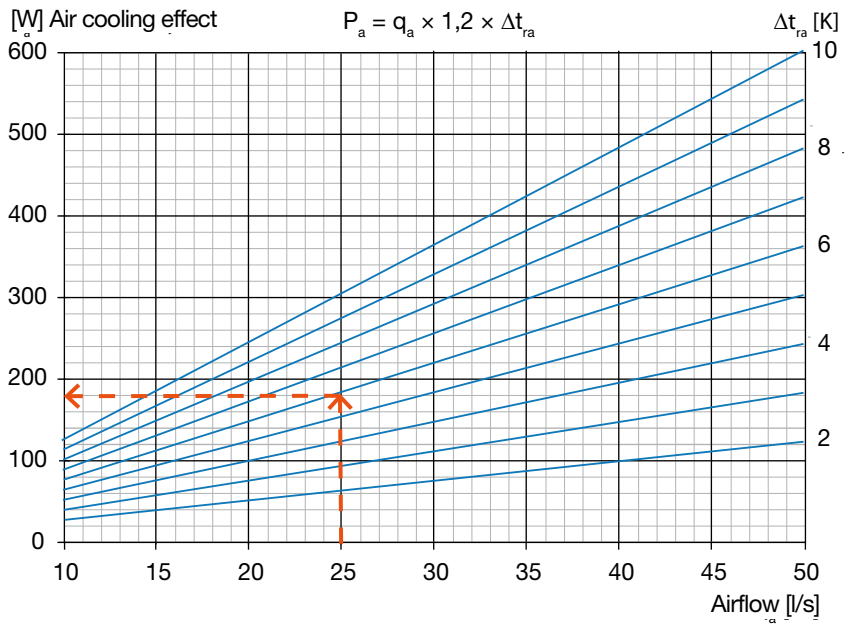

Diagram 1. Air cooling effect as a function of airflow. For example, if the air flow is 25 l/s and the under-temperature of the supply air is Δt = 6 K, the cooling effect from the graph is 180 W.

Fasadium

1
2
3
4
5
6
7
8
9
10
11
12
13
14
15
16
17
18
19

Dimensioning

Effect diagram

Follow the instructions below to read off the effect from the diagram.

1. Calculate Δt (room – mean water)
2. Product length minus 0.2 m, to obtain the active length.
3. Divide the airflow by the active length. Enter the result on the horizontal axis of diagram 2.
4. Follow the flow line to the right pressure, and then read off the effect per active metre and Kelvin. When calculating the heating effect, multiply this value by a factor of 0.8.
Multiply this reading by Δt.
6. Then, multiply by the active length.

Cooling
What is the cooling effect of Fasadium 1000 with 14 l/s and pressure of 150 Pa?
The room's summer temperature is assumed to be 24.5° C
The cooling water temperature in/out of Fasadium is 14/17° C

Answer
Temperature difference Δt = room – mean water
Δt = 24.5 - (14+17) / 2 = 9 K
Active length = 1.0 m - 0.2 m = 0.8 m
14 l/s / 0.8 m = 17.5 l/(s·m)

Read off from diagram 2: 60.1 W/(m·K).
Cooling effect (P) = 60.1 × 9 K × 0.8 m = 433 W

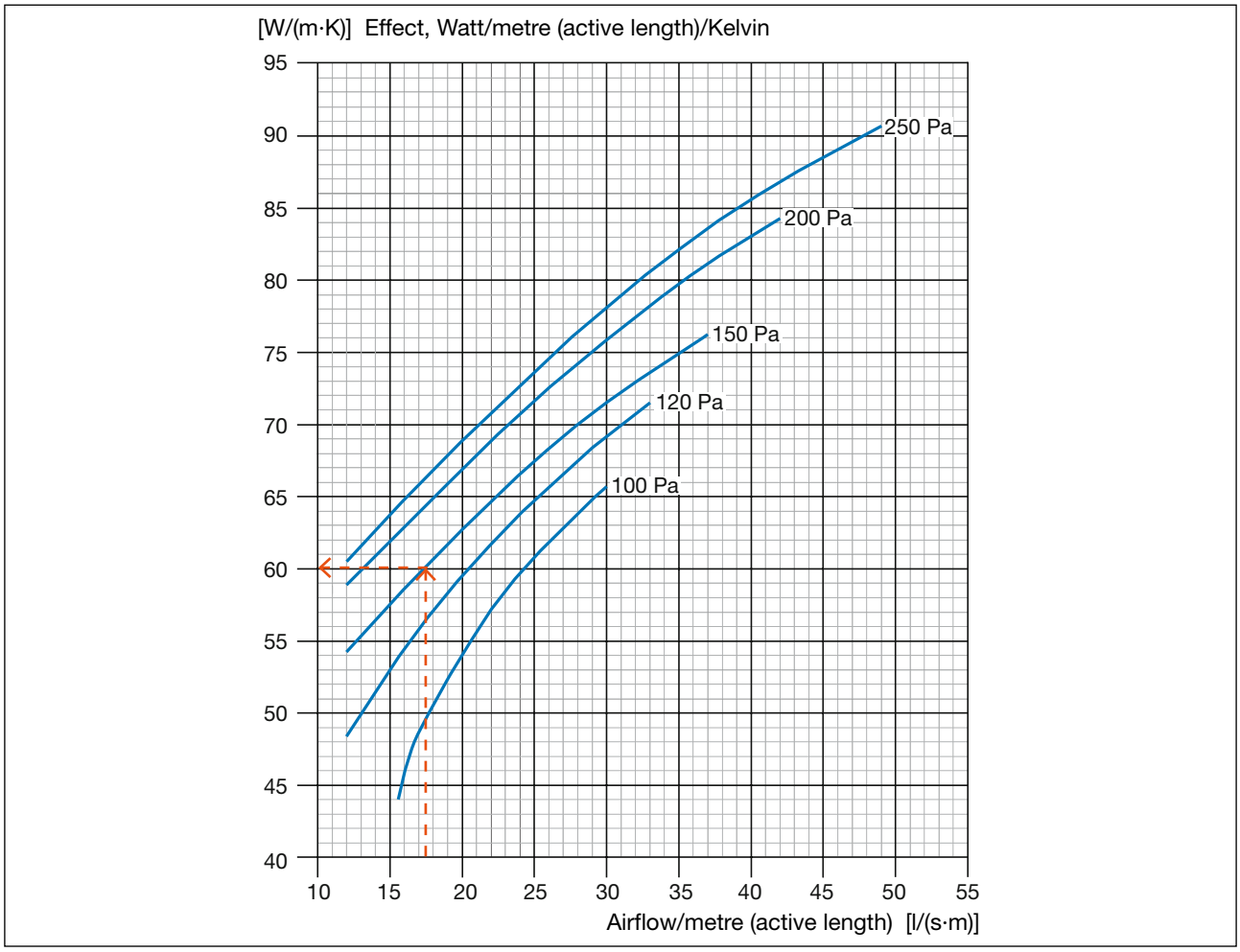

Diagram 2. Effect per active metre (L -02 m) and Kelvin as a function of airflow per active metre at nozzle pressures of 100, 120, 150, 200 and 250 Pa. When calculating the heating effect, multiply this value by a factor of 0.8.

We reserve the right to make changes

Fasadium

Minimum airflow at different pressures

	System size					
Pressure (Pa)	**600**	**700**	**800**	**1000**	**1200**	**1500**
100	12	13	14	16	20	26
150	9	10	11	13	16	21
200	8	9	9	11	14	17
250	8	8	8	10	12	14

Table 1. Minimum airflow at different pressures for the air from Fasadium to reach the ceiling with a room height of 3.0 m. Temperature difference Δt between mean water and room is 10° C.

Heating – natural convection

	System size					
Δt	**600**	**700**	**800**	**1000**	**1200**	**1500**
10	64	80	96	128	160	208
15	112	140	168	224	280	364
20	168	210	252	336	420	546
25	232	290	348	464	580	754
30	312	390	468	624	780	1014
35	408	510	612	816	1020	1326
40	520	650	780	1040	1300	1690

Table 2. The system's heat emission through natural convection in W (no supply air) for respective sizes and temperature difference between the room temperature and the mean temperature of the heating water.

Fasadium

1 2 3 4 5 6 7 8 9 10 11 12 13 14 15 16 17 18 19

Cooling effect – heating effect – sound level

Effect according to the V method

The tabulated data for the cooling effect is measured according to the V method at the Technical Research Institute of Sweden. The test measurements are made on the 800 system at 100 Pa, 150 Pa and 250 Pa, with casing and grill mounted on the system.

The V method means that the room temperature is measured at 1.1 m above floor level, i.e. the temperature in the occupied area. The V method gives a lower effect value compared to conventional measurements. This is because conventional measurement methods use the temperature of inlet air to the facade system to calculate the effect values. Inlet air has a lower temperature than that in the occupied area.

Operating pressure at 100 Pa (10-16 l/s)

		Cooling effect Room temp. - mean water temp.					Heating effect Mean water temp. – room temp.					
Airflow l/s per sys	Size	8	9	10	11	12	10	15	20	25	30	Sound level dB (A)
10*	600	195	219	243	268	292	195	292	389	486	584	<25
10*	700	216	243	270	297	324	216	324	432	540	648	<25

		Cooling effect Room temp. - mean water temp.					Heating effect Mean water temp. – room temp.					
Airflow l/s per sys	Size	8	9	10	11	12	10	15	20	25	30	Sound level dB (A)
12	600	195	219	243	268	292	195	292	389	486	584	<25
12*	700	216	243	270	297	324	216	324	432	540	648	<25
12*	800	259	292	324	356	389	259	389	518	648	778	<25

		Cooling effect Room temp. - mean water temp.					Heating effect Mean water temp. – room temp.					
Airflow l/s per sys	Size	8	9	10	11	12	10	15	20	25	30	Sound level dB (A)
14	700	255	287	319	351	383	255	383	510	638	766	<25
14	800	282	318	353	388	423	282	423	564	706	847	<25
14*	1000	317	356	396	436	475	317	475	634	792	950	<25

		Cooling effect Room temp. - mean water temp.					Heating effect Mean water temp. – room temp.					
Airflow l/s per sys	Size	8	9	10	11	12	10	15	20	25	30	Sound level dB (A)
16	800	300	338	376	413	451	300	451	601	751	901	<25
16	1000	346	389	432	475	518	346	518	691	864	1037	<25
16*	1200	368	414	460	506	552	368	552	736	920	1104	<25

* Room height should be less than 2.7 m.

Table 3-6. Table 7-11. The systems' cooling and heating effect in W, at an operating pressure of 100 Pa, an airflow of 10 to 16 l/s and different Δt. The system's noise sound generation in L_A dB(A) for a system with casing in a room with 10 m² Sabine equivalent sound absorption area.

We reserve the right to make changes

Fasadium

Cooling effect – heating effect – sound level

Operating pressure at 100 Pa (18-40 l/s)

		Cooling effect Room temp. - mean water temp.					Heating effect Mean water temp. – room temp.					
Airflow l/s per sys	**Size**	**8**	**9**	**10**	**11**	**12**	**10**	**15**	**20**	**25**	**30**	**Sound level dB (A)**
18	800	315	355	394	434	473	315	473	631	788	946	<25
18	1000	370	416	462	509	555	370	555	740	925	1110	<25
18*	1200	405	455	506	557	607	405	607	810	1012	1214	<25

		Cooling effect Room temp. - mean water temp.					Heating effect Mean water temp. – room temp.					
Airflow l/s per sys	**Size**	**8**	**9**	**10**	**11**	**12**	**10**	**15**	**20**	**25**	**30**	**Sound level dB (A)**
20	1000	389	438	486	535	584	389	584	778	973	1167	<25
20	1200	432	486	540	594	648	432	648	864	1080	1296	<25

		Cooling effect Room temp. - mean water temp.					Heating effect Mean water temp. – room temp.					
Airflow l/s per sys	**Size**	**8**	**9**	**10**	**11**	**12**	**10**	**15**	**20**	**25**	**30**	**Sound level dB (A)**
25	1200	486	547	608	669	730	486	730	973	1216	1459	<25
25*	1500	547	615	684	752	821	547	821	1094	1368	1641	<25

		Cooling effect Room temp. - mean water temp.					Heating effect Mean water temp. – room temp.					
Airflow l/s per sys	**Size**	**8**	**9**	**10**	**11**	**12**	**10**	**15**	**20**	**25**	**30**	**Sound level dB (A)**
30	1200	526	591	657	723	788	526	788	1051	1314	1577	<25
30	1500	609	686	762	838	914	609	914	1219	1524	1828	<25

		Cooling effect Room temp. - mean water temp.					Heating effect Mean water temp. – room temp.					
Airflow l/s per sys	**Size**	**8**	**9**	**10**	**11**	**12**	**10**	**15**	**20**	**25**	**30**	**Sound level dB (A)**
40	1500	691	777	863	950	1036	691	1036	1381	1726	2072	<25

* Room height should be less than 2.7 m.

Table 7-11. The systems' cooling and heating effect in W, at an operating pressure of 100 Pa, an airflow of 18 to 40 l/s and different Δt System's inherent noise generation in L_A dB(A) for a system with casing in a room with 10 m^2 Sabine equivalent sound absorption area.

1 2 3 4 5 6 7 8 9 10 11 12 13 14 15 16 17 18 19

Fasadium

Cooling effect – heating effect – sound level

Operating pressure 120 Pa (10-16 l/s)

		Cooling effect Room temp. - mean water temp.					Heating effect Mean water temp. – room temp.					
Airflow l/s per sys	**Size**	**8**	**9**	**10**	**11**	**12**	**10**	**15**	**20**	**25**	**30**	**Sound level dB (A)**
10	600	207	233	259	285	311	207	311	414	518	621	<25
10*	700	238	268	298	328	358	238	358	477	596	715	<25
10*	800	268	301	335	368	402	268	402	536	670	804	<25

		Cooling effect Room temp. - mean water temp.					Heating effect Mean water temp. – room temp.					
Airflow l/s per sys	**Size**	**8**	**9**	**10**	**11**	**12**	**10**	**15**	**20**	**25**	**30**	**Sound level dB (A)**
12	600	221	249	277	304	332	221	332	443	554	664	<25
12	700	255	287	319	351	383	255	383	510	638	766	<25
12*	800	286	322	358	393	429	286	429	572	715	858	<25
12*	1000	339	382	424	466	509	339	509	678	848	1018	<25

		Cooling effect Room temp. - mean water temp.					Heating effect Mean water temp. – room temp.					
Airflow l/s per sys	**Size**	**8**	**9**	**10**	**11**	**12**	**10**	**15**	**20**	**25**	**30**	**Sound level dB (A)**
14	700	270	304	338	372	406	270	406	541	676	811	<25
14	800	302	340	378	416	454	302	454	605	756	907	<25
14	1000	361	406	451	496	541	361	541	722	902	1083	<25
14*	1200	412	464	515	567	618	412	618	824	1030	1236	<25

		Cooling effect Room temp. - mean water temp.					Heating effect Mean water temp. – room temp.					
Airflow l/s per sys	**Size**	**8**	**9**	**10**	**11**	**12**	**10**	**15**	**20**	**25**	**30**	**Sound level dB (A)**
16	700	283	318	354	389	424	283	424	566	707	848	<25
16	800	318	357	397	437	477	318	477	636	794	953	<25
16	1000	381	429	477	524	572	381	572	763	954	1144	<25
16*	1200	435	490	544	598	653	435	653	870	1088	1306	<2

* Room height should be less than 2.7 m.

Table 12-15. The systems' cooling and heating effect in W, at an operating pressure of 120 Pa, airflow of 10 to 16 l/s and different Δt The system's inherent noise generation in L_A dB(A) for a system with casing in a room with 10 m² Sabine equivalent sound absorption area.

We reserve the right to make changes

Fasadium

Cooling effect – heating effect – sound level

Operating pressure 120 Pa (18-40 l/s)

		Cooling effect Room temp. - mean water temp.					Heating effect Mean water temp. – room temp.					
Airflow l/s per sys	**Size**	**8**	**9**	**10**	**11**	**12**	**10**	**15**	**20**	**25**	**30**	**Sound level dB (A)**
18	800	332	374	415	457	498	332	498	664	830	996	<25
18	1000	398	448	498	547	597	398	597	796	995	1194	<25
18	1200	458	515	572	629	686	458	686	915	1144	1373	<25

		Cooling effect Room temp. - mean water temp.					Heating effect Mean water temp. – room temp.					
Airflow l/s per sys	**Size**	**8**	**9**	**10**	**11**	**12**	**10**	**15**	**20**	**25**	**30**	**Sound level dB (A)**
20	800	343	386	429	472	515	343	515	686	858	1030	<25
20	1000	414	466	518	569	621	414	621	828	1035	1242	<25
20	1200	477	536	596	656	715	477	715	954	1192	1430	<25
20*	1500	556	626	696	765	835	556	835	1113	1391	1669	<25

		Cooling effect Room temp. - mean water temp.					Heating effect Mean water temp. – room temp.					
Airflow l/s per sys	**Size**	**8**	**9**	**10**	**11**	**12**	**10**	**15**	**20**	**25**	**30**	**Sound level dB (A)**
25	1000	449	505	562	618	674	449	674	899	1123	1348	<25
25	1200	518	582	647	712	776	518	776	1035	1294	1553	<25
25	1500	609	686	762	838	914	609	914	1219	1524	1828	<25

		Cooling effect Room temp. - mean water temp.					Heating effect Mean water temp. – room temp.					
Airflow l/s per sys	**Size**	**8**	**9**	**10**	**11**	**12**	**10**	**15**	**20**	**25**	**30**	**Sound level dB (A)**
30	1200	554	623	692	761	830	554	830	1107	1384	1661	<25
30	1500	654	736	818	899	981	654	981	1308	1635	1962	<25

		Cooling effect Room temp. - mean water temp.					Heating effect Mean water temp. – room temp.					
Airflow l/s per sys	**Size**	**8**	**9**	**10**	**11**	**12**	**10**	**15**	**20**	**25**	**30**	**Sound level dB (A)**
40	1500	726	817	907	998	1089	726	1089	1452	1815	2178	<25

* Room height should be less than 2.7 m.

Table 15-20. The systems' cooling and heating effect in W, at an operating pressure of 120 Pa, airflow of 18 to 40 l/s and different Δt. The system's inherent noise generation in L_A dB(A) for a system with casing in a room with 10 m² Sabine equivalent sound absorption area.

1 2 3 4 5 6 7 8 9 10 11 12 13 14 15 16 17 18 19

Fasadium

Cooling effect – heating effect – sound level

Operating pressure at 150 Pa (10-16 l/s)

		Cooling effect Room temp. - mean water temp.					Heating effect Mean water temp. – room temp.					
Airflow l/s per sys	**Size**	**8**	**9**	**10**	**11**	**12**	**10**	**15**	**20**	**25**	**30**	**Sound level dB (A)**
10	600	216	243	270	297	324	216	324	431	539	647	<25
10	700	251	283	314	345	377	251	377	502	628	754	<25
10*	800	286	322	358	393	429	286	429	572	715	858	<25
10*	1000	351	395	438	482	526	351	526	701	877	1052	<25

		Cooling effect Room temp. - mean water temp.					Heating effect Mean water temp. – room temp.					
Airflow l/s per sys	**Size**	**8**	**9**	**10**	**11**	**12**	**10**	**15**	**20**	**25**	**30**	**Sound level dB (A)**
12	600	229	258	286	315	344	229	344	458	573	687	<25
12	700	266	300	333	366	400	266	400	533	666	799	<25
12	800	301	339	377	414	452	301	452	603	754	904	<25
12*	1000	369	415	461	507	553	369	553	737	922	1106	<25
12*	1200	434	488	542	596	650	434	650	867	1084	1301	<25

		Cooling effect Room temp. - mean water temp.					Heating effect Mean water temp. – room temp.					
Airflow l/s per sys	**Size**	**8**	**9**	**10**	**11**	**12**	**10**	**15**	**20**	**25**	**30**	**Sound level dB (A)**
14	600	240	270	300	330	360	240	360	480	600	720	<25
14	700	280	315	350	385	420	280	420	560	700	840	<25
14	800	316	355	395	434	474	316	474	632	790	948	<25
14	1000	385	433	482	530	578	385	578	771	963	1156	<25
14*	1200	451	508	564	620	677	451	677	902	1128	1354	<25

		Cooling effect Room temp. - mean water temp.					Heating effect Mean water temp. – room temp.					
Airflow l/s per sys	**Size**	**8**	**9**	**10**	**11**	**12**	**10**	**15**	**20**	**25**	**30**	**Sound level dB (A)**
16	700	292	329	365	402	438	292	438	584	730	876	<25
16	800	331	373	414	455	497	331	497	662	828	994	<25
16	1000	402	452	502	553	603	402	603	804	1005	1206	<25
16	1200	469	527	586	645	703	469	703	938	1172	1406	<25

* Room height should be less than 2.7 m.

Table 21-24. The systems' cooling and heating effect in W, at an operating pressure of 150 Pa, airflow of 10 to 16 l/s and different Δt. The system's inherent noise generation in L_A dB(A) for a system with casing in a room with 10 m² Sabine equivalent sound absorption area.

We reserve the right to make changes

Fasadium

Cooling effect – heating effect – sound level

Operating pressure at 150 Pa (18-40 l/s)

		Cooling effect Room temp. - mean water temp.					Heating effect Mean water temp. – room temp.					
Airflow l/s per sys	**Size**	**8**	**9**	**10**	**11**	**12**	**10**	**15**	**20**	**25**	**30**	**Sound level dB (A)**
18	700	302	340	378	416	454	302	454	605	756	907	<25
18	800	344	387	430	473	516	344	516	687	859	1031	<25
18	1000	417	469	521	573	625	417	625	833	1042	1250	<25
18	1200	486	546	607	668	728	486	728	971	1214	1457	<25
18*	1500	584	658	731	804	877	584	877	1169	1461	1753	<25

		Cooling effect Room temp. - mean water temp.					Heating effect Mean water temp. – room temp.					
Airflow l/s per sys	**Size**	**8**	**9**	**10**	**11**	**12**	**10**	**15**	**20**	**25**	**30**	**Sound level dB (A)**
20	800	353	397	442	486	530	353	530	707	883	1060	<25
20	1000	431	485	539	593	647	431	647	863	1078	1294	<25
20	1200	502	565	628	691	754	502	754	1005	1256	1507	<25
20*	1500	603	679	754	829	905	603	905	1206	1508	1810	<25

		Cooling effect Room temp. - mean water temp.					Heating effect Mean water temp. – room temp.					
Airflow l/s per sys	**Size**	**8**	**9**	**10**	**11**	**12**	**10**	**15**	**20**	**25**	**30**	**Sound level dB (A)**
25	1000	463	521	579	637	695	463	695	927	1158	1390	<25
25	1200	539	607	674	741	809	539	809	1078	1348	1618	<25
25	1500	645	725	806	887	967	645	967	1290	1612	1934	<25

		Cooling effect Room temp. - mean water temp.					Heating effect Mean water temp. – room temp.					
Airflow l/s per sys	**Size**	**8**	**9**	**10**	**11**	**12**	**10**	**15**	**20**	**25**	**30**	**Sound level dB (A)**
30	1200	573	644	716	788	859	573	859	1146	1432	1718	<25
30	1500	683	769	854	940	1025	683	1025	1367	1708	2050	<25

		Cooling effect Room temp. - mean water temp.					Heating effect Mean water temp. – room temp.					
Airflow l/s per sys	**Size**	**8**	**9**	**10**	**11**	**12**	**10**	**15**	**20**	**25**	**30**	**Sound level dB (A)**
40	1500	749	842	936	1030	1123	749	1123	1498	1872	2246	<25

Table 25-29. Systems' cooling and heating effect in W at operating pressure of 150 Pa, air flow of 18 to 40 l/s and different Δt. The system's inherent sound generation in L_A dB(A) for a system with casing in a room with 10 m² Sabine equivalent sound absorption area.

Fasadium

Cooling effect – heating effect – sound level

Operating pressure 200 Pa (10-16 l/s)

		Cooling effect Room temp. - mean water temp.					Heating effect Mean water temp. – room temp.					
Airflow l/s per sys	**Size**	**8**	**9**	**10**	**11**	**12**	**10**	**15**	**20**	**25**	**30**	**Sound level dB (A)**
10	600	229	258	286	315	344	229	344	458	573	687	<25
10	700	267	301	334	367	401	267	401	534	668	802	<25
10	800	306	345	383	421	459	306	459	612	766	919	<25
10*	1000	380	428	475	523	570	380	570	760	950	1140	<25

		Cooling effect Room temp. - mean water temp.					Heating effect Mean water temp. – room temp.					
Airflow l/s per sys	**Size**	**8**	**9**	**10**	**11**	**12**	**10**	**15**	**20**	**25**	**30**	**Sound level dB (A)**
12	600	243	273	303	334	364	243	364	485	606	728	<25
12	700	283	318	354	389	424	283	424	566	707	848	<25
12	800	321	361	401	441	481	321	481	641	802	962	<25
12	1000	396	445	494	544	593	396	593	791	989	1187	<25
12*	1200	470	529	588	647	706	470	706	941	1176	1411	<25

		Cooling effect Room temp. - mean water temp.					Heating effect Mean water temp. – room temp.					
Airflow l/s per sys	**Size**	**8**	**9**	**10**	**11**	**12**	**10**	**15**	**20**	**25**	**30**	**Sound level dB (A)**
14	600	255	287	319	351	383	255	383	510	638	765	<25
14	700	297	334	371	408	445	297	445	594	742	890	<25
14	800	336	378	420	462	504	336	504	672	840	1008	<25
14	1000	412	464	515	567	618	412	618	824	1030	1236	<25
14	1200	486	547	608	669	730	486	730	973	1216	1459	<25

		Cooling effect Room temp. - mean water temp.					Heating effect Mean water temp. – room temp.					
Airflow l/s per sys	**Size**	**8**	**9**	**10**	**11**	**12**	**10**	**15**	**20**	**25**	**30**	**Sound level dB (A)**
16	600	266	299	332	365	398	266	398	531	664	797	<25
16	700	310	348	387	426	464	310	464	619	774	929	<25
16	800	351	395	439	483	527	351	527	703	878	1054	<25
16	1000	428	481	534	588	641	428	641	855	1069	1283	<25
16	1200	502	565	628	691	754	502	754	1005	1256	1507	<25
16*	1500	616	693	770	847	924	616	924	1231	1539	1847	<25

Table 30-33. The systems' cooling and heating effect in W, at an operating pressure of 200 Pa, airflow of 10 to 16 l/s and different Δt. The system's inherent noise generation in L_A dB(A) for a system with casing in a room with 10 m² Sabine equivalent sound absorption area.

We reserve the right to make changes

Fasadium

Cooling effect – heating effect – sound level

Operating pressure 200 Pa (18-30 l/s)

		Cooling effect Room temp. - mean water temp.					Heating effect Mean water temp. – room temp.					
Airflow l/s per sys	**Size**	**8**	**9**	**10**	**11**	**12**	**10**	**15**	**20**	**25**	**30**	**Sound level dB (A)**
18	700	322	362	402	442	482	322	482	643	804	965	<25
18	800	364	409	455	500	546	364	546	728	910	1092	<25
18	1000	444	500	555	611	666	444	666	888	1110	1332	<25
18	1200	519	584	649	714	779	519	779	1038	1298	1558	<25
18	1500	630	709	788	867	945	630	945	1260	1576	1891	<25

		Cooling effect Room temp. - mean water temp.					Heating effect Mean water temp. – room temp.					
Airflow l/s per sys	**Size**	**8**	**9**	**10**	**11**	**12**	**10**	**15**	**20**	**25**	**30**	**Sound level dB (A)**
20	700	332	374	415	457	498	332	498	664	830	996	<25
20	800	375	422	469	516	563	375	563	751	938	1126	<25
20	1000	458	516	573	630	687	458	687	916	1146	1375	<25
20	1200	534	601	668	735	802	534	802	1069	1336	1603	<25
20	1500	647	728	809	889	970	647	970	1294	1617	1941	<25

		Cooling effect Room temp. - mean water temp.					Heating effect Mean water temp. – room temp.					
Airflow l/s per sys	**Size**	**8**	**9**	**10**	**11**	**12**	**10**	**15**	**20**	**25**	**30**	**Sound level dB (A)**
25	800	403	454	504	554	605	403	605	806	1008	1210	<25
25	1000	492	553	614	676	737	492	737	983	1229	1475	<25
25	1200	573	644	716	788	859	573	859	1146	1432	1718	<25
25	1500	688	775	861	947	1033	688	1033	1377	1721	2065	<25

		Cooling effect Room temp. - mean water temp.					Heating effect Mean water temp. – room temp.					
Airflow l/s per sys	**Size**	**8**	**9**	**10**	**11**	**12**	**10**	**15**	**20**	**25**	**30**	**Sound level dB (A)**
30	1000	522	587	652	717	782	522	782	1043	1304	1565	<25
30	1200	606	682	758	834	910	606	910	1213	1516	1819	<25
30	1500	726	817	907	998	1089	726	1089	1452	1815	2178	<25

Table 34-37. The systems' cooling and heating effect in W, at an operating pressure of 200 Pa, airflow of 18 to 30 l/s and different Δt. The system's inherent noise generation in L_A dB(A) for a system with casing in a room with 10 m² Sabine equivalent sound absorption area.

1 2 3 4 5 6 7 8 9 10 11 12 13 14 15 16 17 18 19

Fasadium

Cooling effect – heating effect – sound level

Operating pressure 200 Pa (40 l/s)

		Cooling effect Room temp. - mean water temp.					Heating effect Mean water temp. – room temp.					
Airflow l/s per sys	**Size**	**8**	**9**	**10**	**11**	**12**	**10**	**15**	**20**	**25**	**30**	**Sound level dB (A)**
40	1200	664	747	830	913	996	664	996	1328	1660	1992	<25
40	1500	796	895	995	1094	1193	796	1193	1591	1989	2387	<25

Table 38. The systems' cooling and heating effect in W, at an operating pressure of 200 Pa, airflow of 40 l/s and different Δt. The system's inherent noise generation in L_A dB(A) for a system with casing in a room with 10 m2 Sabine equivalent sound absorption area.

Sound pressure level

Example

What is the sound pressure level in the first system of several systems connected in series?

The airflow to the first unit is 100 l/s. The duct diameter (Ø) is 160.

Answer

Read off the sound pressure level from diagram 3, Inherent noise generation in the first system. The value is 26 dB(A). Add the value to the system's sound pressure level - 25 dB(A). Read off the increase from diagram 4, Logarithmic addition of two levels, and add it to give a higher sound pressure level.

Diagram 4 shows a value of approx. 2.6 dB(A), which must be added to the higher level, 26 dB(A). Round off to a whole dB(A) value. The result is a total sound pressure level of 29 dB(A).

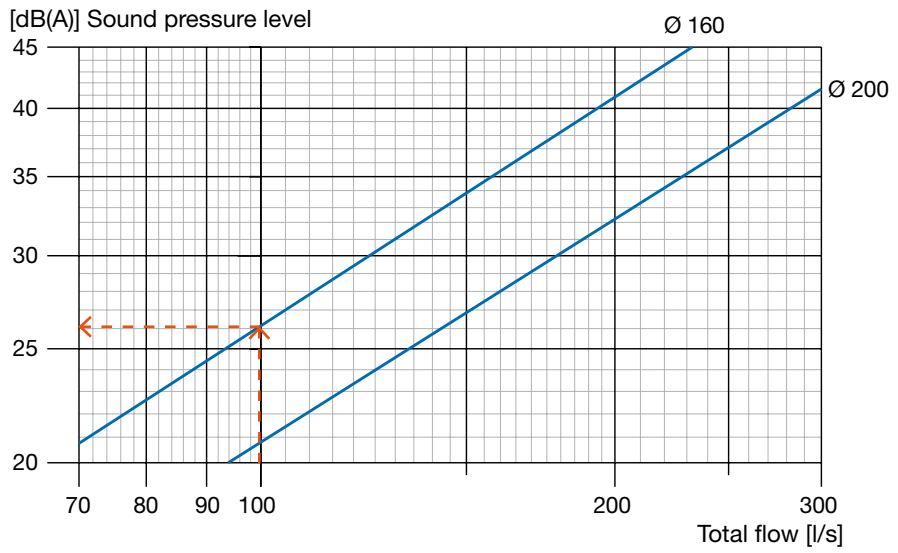

Diagram 3. Inherent noise generation in the first system. Sound pressure level with 10 m² Sabine attenuation.

We reserve the right to make changes

Fasadium

Sound pressure level

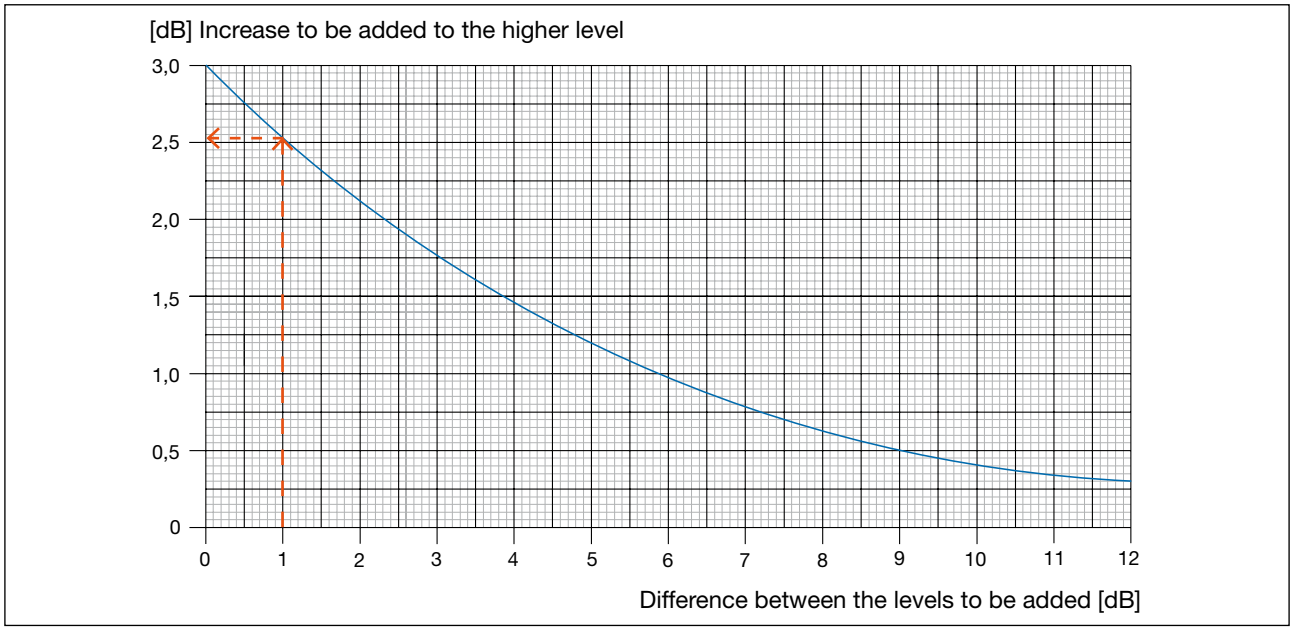

Diagram 4. Logarithmic addition of two levels.

Internal sound dampening

	Frequency (Hz)							
Size	**63**	**125**	**250**	**500**	**1000**	**2000**	**4000**	**8000**
600	19	13	14	12	15	18	13	13
700	18	12	13	11	14	17	12	12
800	17	11	12	10	13	16	11	11
1000	16	10	11	9	12	15	10	10
1200	15	9	10	8	11	14	9	9
1500	14	8	9	7	10	13	8	8

Table 39. Total sound power reduction from connecting duct to the room, including end reflection.

Fasadium

Dimensions

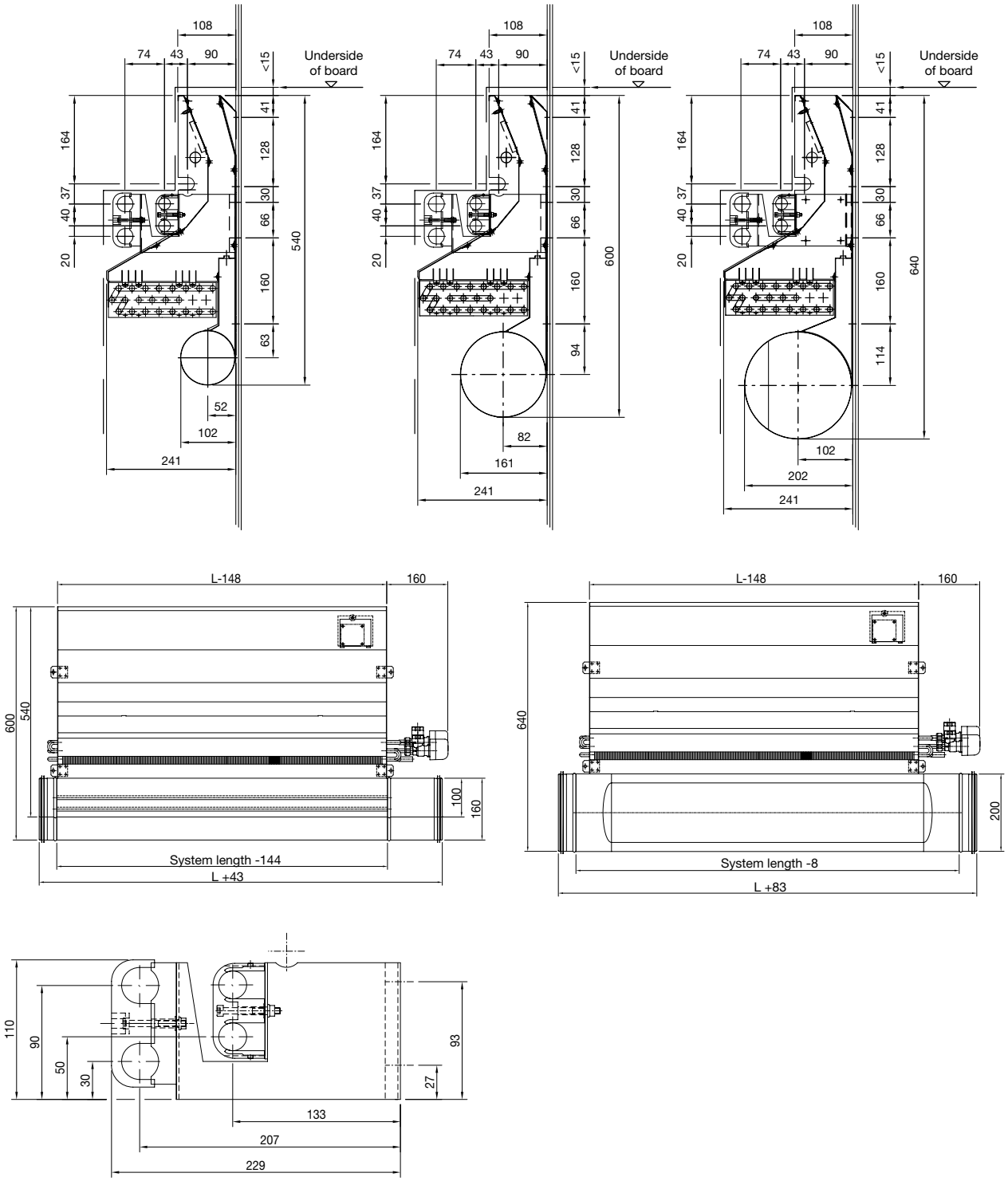

Dimensions of pipe bracket (accessory).

Figure 3. Fasadium standard, dimensions.

We reserve the right to make changes

Fasadium

Dimensions

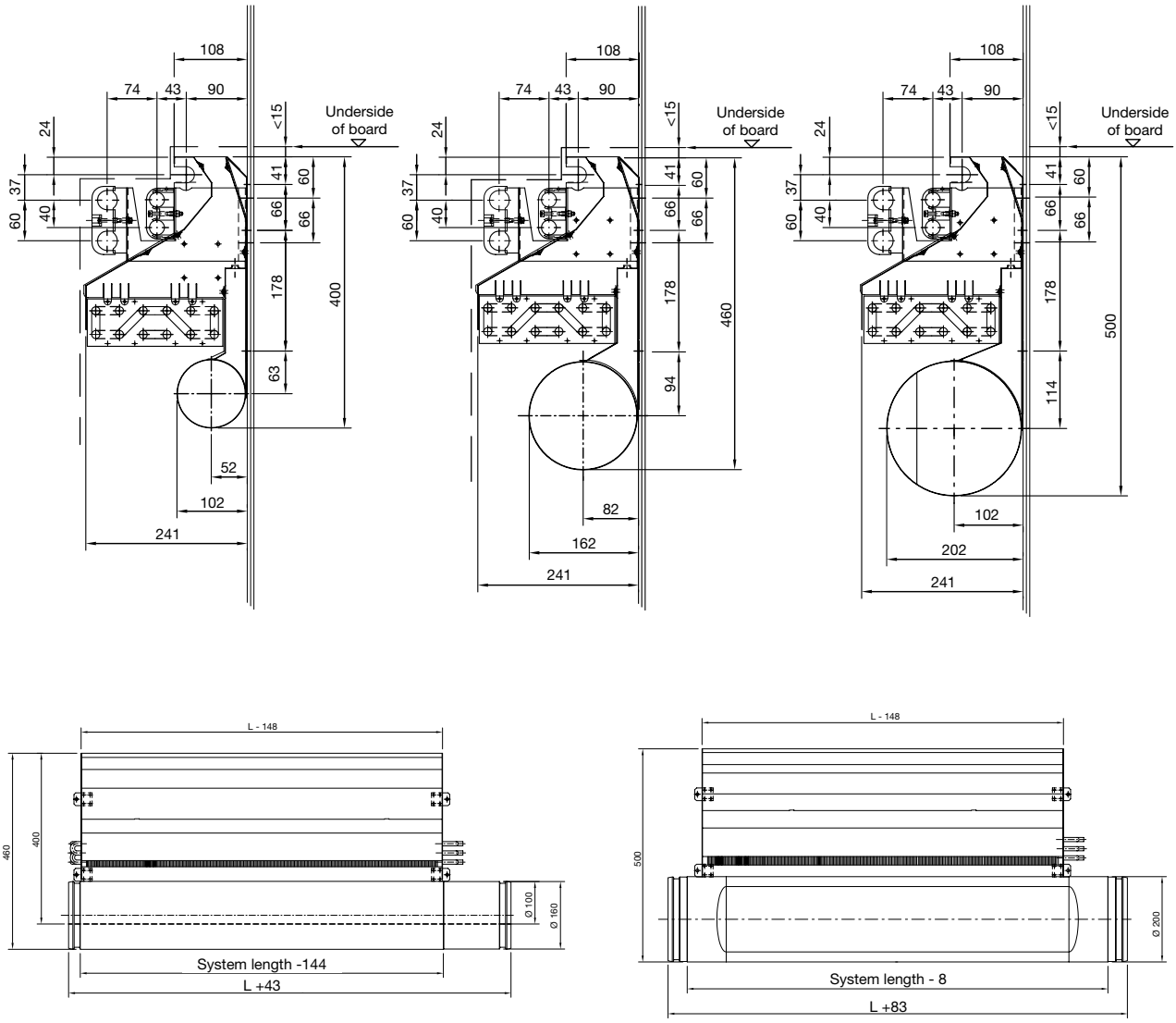

Figure 4. Fasadium low, system dimensions.

Figure 3 shows Fasadium's battery unit length ≥ 0,8 m
Figure 4 shows Fasadium's battery unit length ≥ 1,0 m

Weight and water volume

Weight excl. water (transport weight, kg)	System length					
	600	700	800	1000	1200	1500
Ø 100 duct	9,5	10,5	12,0	14,0	17,0	21,0
Ø 160 duct	10.0	11.0	12.5	15.0	18.0	22.0
Ø 200 duct	10.5	11.5	13.0	16.0	19.0	23.0
Water volume (l)	0.73	0.88	1.02	1.32	1.6	2.05
Cooling circuit (l)	0.55	0.66	0.77	0.99	1.21	1.54
Heating circuit (l)	0.18	0.22	0.25	0.33	0.39	0.51

Table 40. Weight and water volume.

Fasadium

Distribution diagrams, Fasadium - 800

The measurements were conducted with cooled supply air (Δt room air – supply air 6° C) and cooling in the water circuit (Δt room – mean water temperature 10° C). Measurements were made according to the V method. All heat supplied through the walls.

Isolevels 0.20 m/s

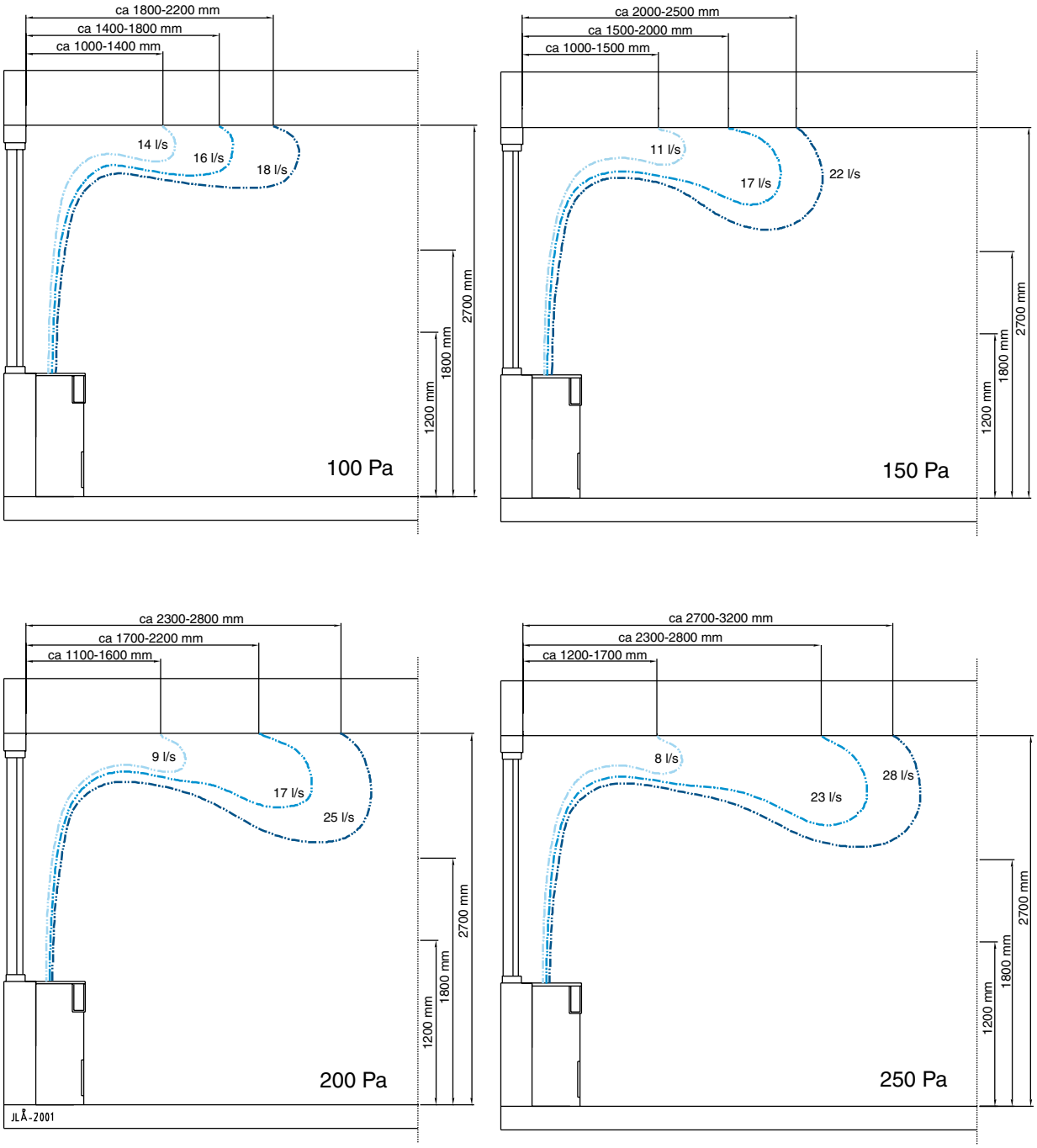

Figure 5. Fasadium – 800 distribution diagrams, different air and flow settings.

We reserve the right to make changes

Fasadium

Distribution diagrams, Fasadium 1200

The measurements were conducted with cooled supply air (Δt room air – supply air 6° C) and cooling in the water circuit (Δt room – mean water temperature 10° C). Measurements were made according to the V method. All heat supplied through the walls.

Isolevels 0.20 m/s

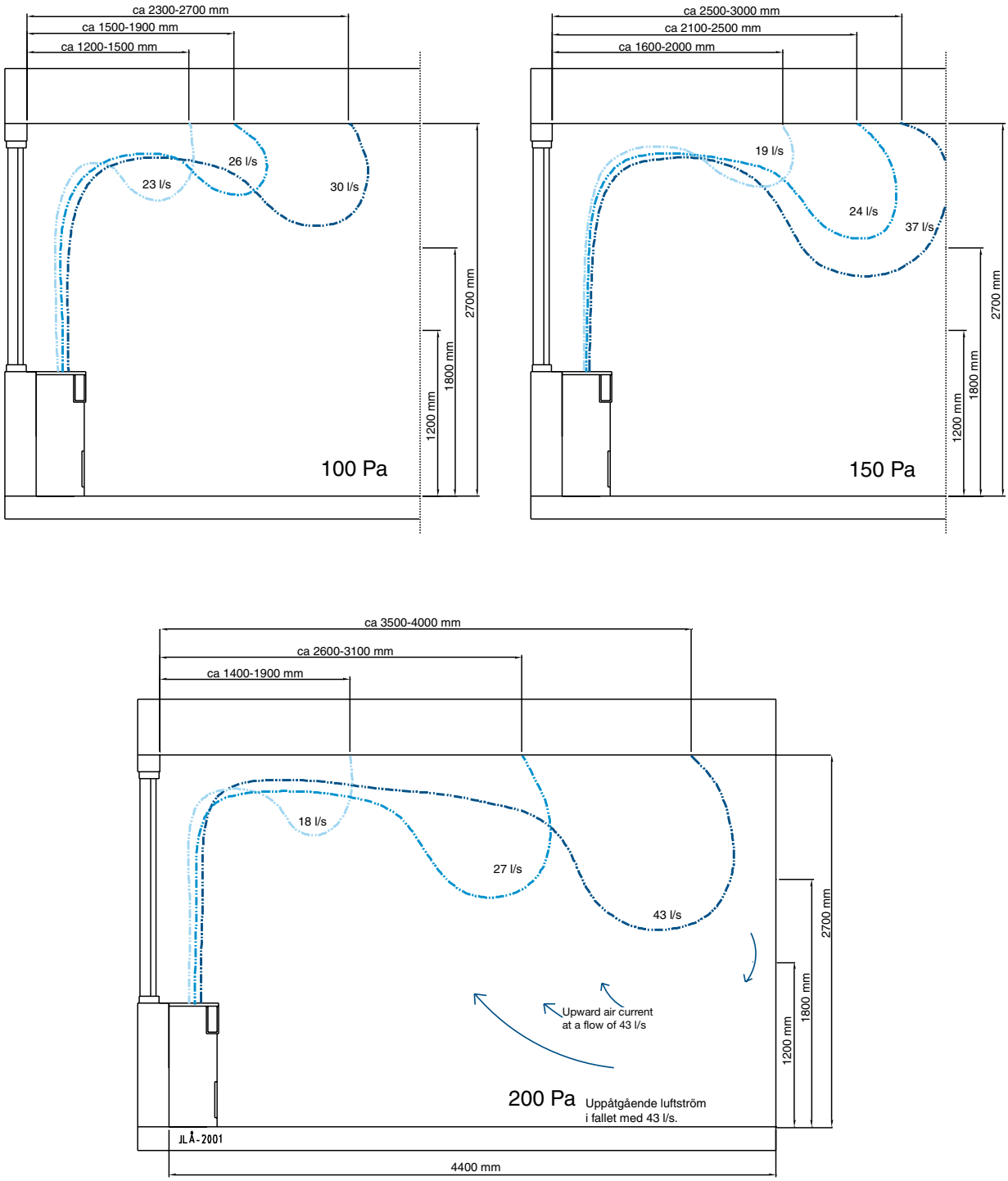

Figure 6. Fasadium – 1200 distribution diagrams, different air and flow settings.

Fasadium

1 2 3 4 5 6 7 8 9 10 11 12 13 14 15 16 17 18 19

Pressure drop in the battery's cooling circuit

Fasadium has a factory-preset total pressure drop of 14 kPa across the valve and battery, at a nominal flow calculated on the basis of Δt (water in – out) 3 K. (see table 41).

System length [mm]	600	700	800	1000	1200	1500
Nominal flow [l/s]	0.018	0.023	0.027	0.034	0.043	0.054

Table 41. Fasadium, nominal flow.

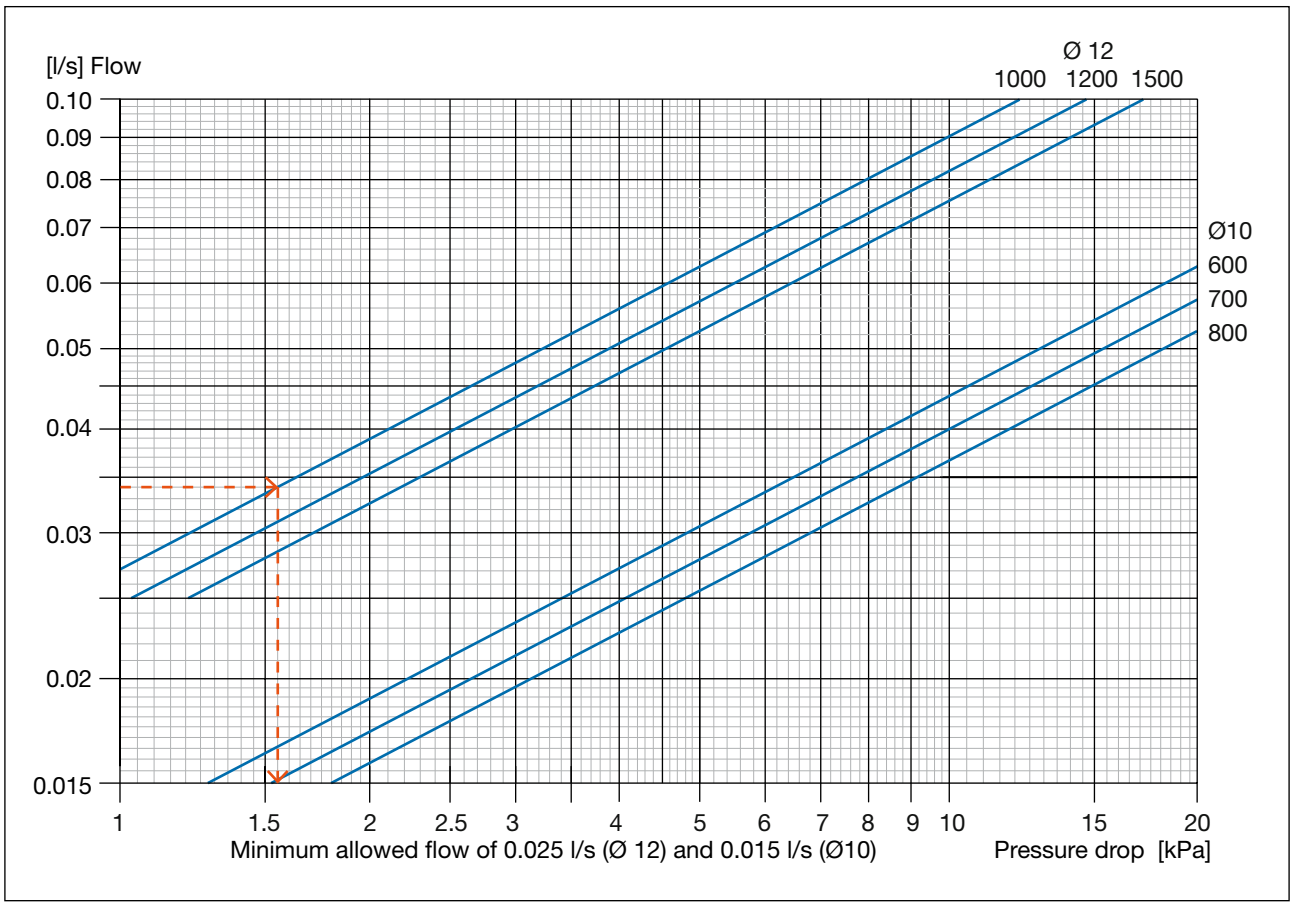

Diagram 5. Pressure drop in the battery's cooling circuit.

$q_w = P / (C_p \times \Delta t)$

q_w = *water flow [l/s]*
P = *effect [W]*
C_p = *specific heat capacity [J/(kg·K)]*
Δt = *temperature difference in the water circuit in/out [K]*

Example:

Fasadium 1000 gives an output of 433 W.
$\Delta t = 3$ *K*
$q_w = 433 / (4200 \times 3) = 0.034$ *l/s*
The pressure drop in the water circuit in diagram 5 is read off as 1.55 kPa.

We reserve the right to make changes

Fasadium

Pressure drop in the battery's heating circuit

Fasadium has a factory-preset total pressure drop of 14 kPa across the valve and battery, at a nominal flow calculated on the basis of Δt (water in – out) 10 K. (see table 42).

System length [mm]	600	700	800	1000	1200	1500
Nominal flow [l/s]	0.016	0.021	0.025	0.031	0.039	0.049

Table 42. Fasadium, nominal flow.

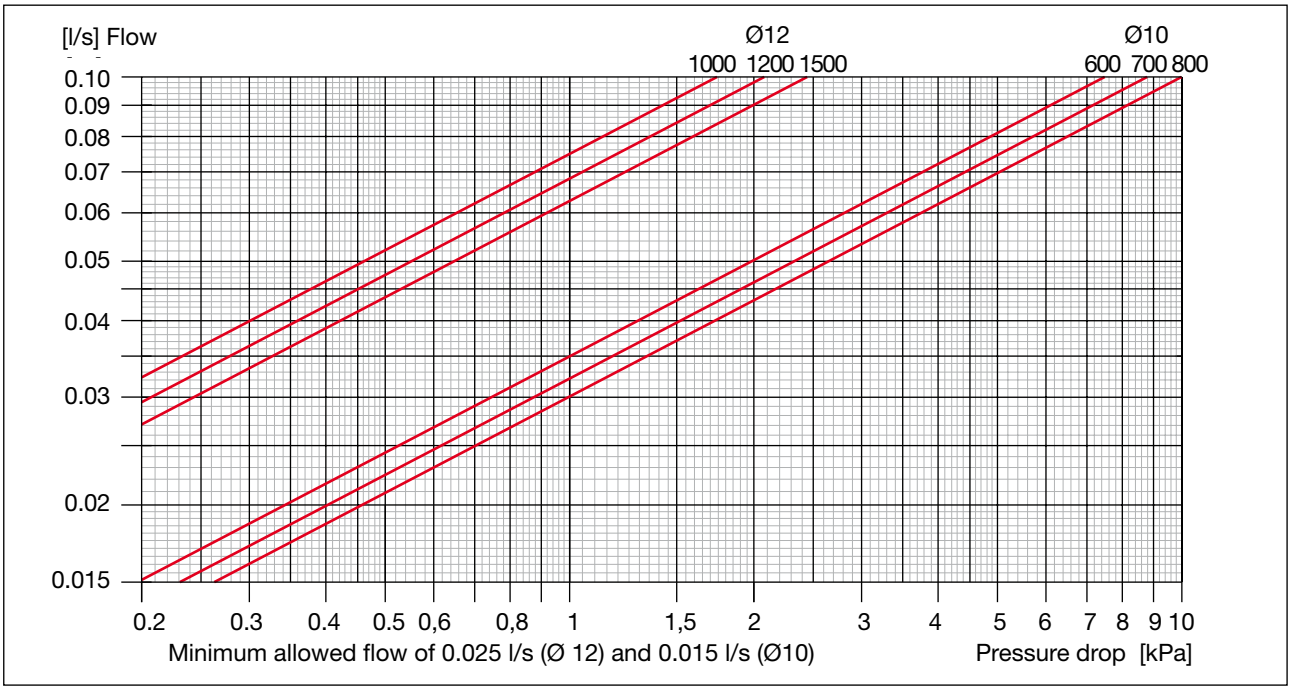

Diagram 6. Pressure drop in the battery's heating circuit

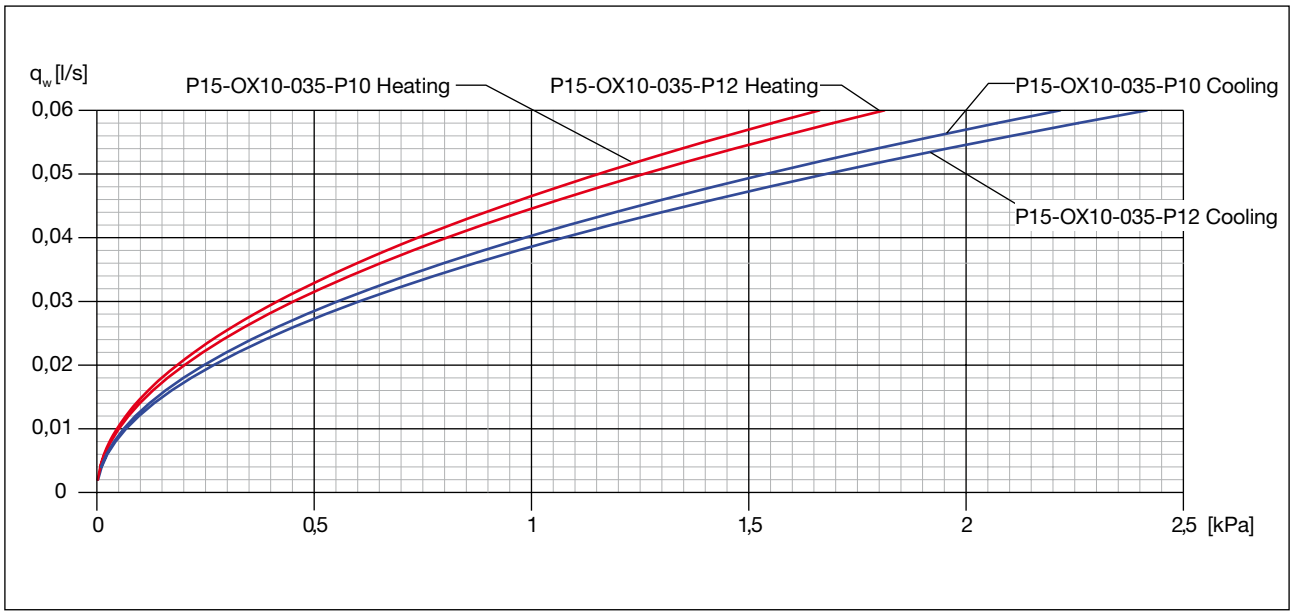

Diagram 7. Pressure drop in the flexible pipes.

Fasadium

MMA valve

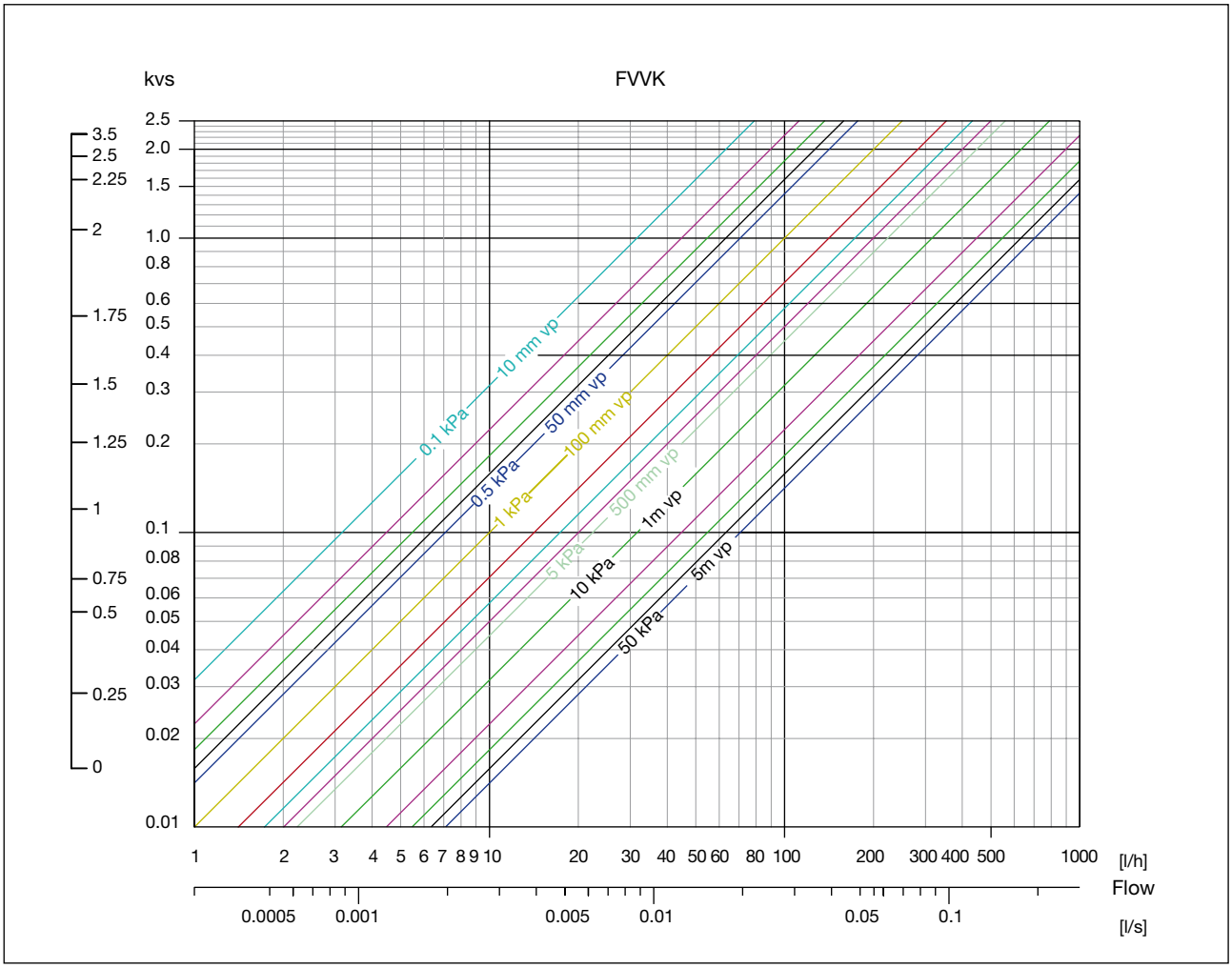

Diagram 8. FVVK Ø15, pressure drop and adjustment diagram.

We reserve the right to make changes

Fasadium

Specification

System:	Fasadium
Length, [mm]:	600, 700, 800, 1000, 1200, 1500
Duct dimension, [mm]:	Ø100, Ø160, Ø200
Height, [mm]:	
Standard	540 - Ø100, 600 - Ø160, 640 - Ø200
Low model	400 - Ø100, 460 - Ø160, 500 - Ø200
Air quantity, [l/s]:	8 - 40 l/s
Nozzle pressure, [Pa]:	100 - 250 Pa

Included as part of the standard package:
Assembly rail (L = system length)
Pipes, 4 with flat pipe ends Ø15 mm
Valves, heating and cooling
Actuators and connection card
Device cable 2 m
VP tube (L = system length)
Lindab connector nipples (NPU and/or SKNPU), depending on duct dimensions

Plus features:

Regula Secura	
Floor connection	Indicate connection dimension
Only heating or cooling	

System accessories:

T pipe 22-15-22:	Indicate type and quantity
T pipe 28-15-28:	Indicate type and quantity
Termination pack with air bleed:	Heating and cooling Heating or cooling
Nipple Ø100, Ø160, Ø200	Indicate diameter and quantity
Windowsill grill/straight flow:	Indicate system size
Windowsill grill/angled flow:	Indicate system size
Windowsill grill Galea with arched ribs:	Indicate system size
Control equipment:	Regula, control centre Extension cable Thermostat cable

Transformer F 105 VA (Max. 18 systems)
Transformer F 35 VA (Max. 6 systems)

Programme text

Facade systems from Lindab	**Qty**
Product:	
Fasadium -24-1000-600-160	40
Air quantity:	20 l/s
Air pressure:	150 Pa
Plus features:	
Regula Secura condensation guard:	
Accessories:	
Regula Combi:	40
Thermostat cable:	40
Extension cables:	40
Pipe bracket:	80
Termination pack, incl. air bleed:	10
Galea grill 1000 white:	40

Heating and cooling panels

Contact, Overview, Index	1
Guideline heating and cooling	2
Plexus	3
Professor	4
Pilot	5
Architect	6
Polaris I & S	7
Plafond	8
Podium	9
Celo	10
Cabinett	11
Capella	12
Carat	13
Fasadium	14
Atrium H & C /Loggia	15
Regula	16
Drypac™	17
Lighting	18
TEKNOsim	19

© 15.2011 Lindab Ventilation A/S. All forms of reproduction without written permission are forbidden. Lindab® is the registered trademark of Lindab AB. Lindab's products, systems, product and product group designations are protected by intellectual property rights (IPR).

Heating and cooling panels

Use

Lindab's heating and cooling panels are mounted in the ceiling and primarily provide heating/cooling by radiation. The radiation share for the panels exceeds 50% to 60%, compared to approx. 5% for conventional finned products. Since the air velocities can be kept low, this results in a draught-free environment.

Radiant heating can also be used with high ceiling heights since the radiant heating, despite the high placement, heats the underlying surfaces directly without any losses to the air.

The lower temperature gradient and the increased radiation temperature also results in energy-efficient heating alternatives compared to other heating systems.

Installation

The heating/cooling panels are installed either suspended or recessed into a suspended ceiling.

The panels can be supplied with different connection alternatives, depending on whether they are to be mounted individually or in series.

Worth noting

A high radiation quotient results in low air velocities and provides very good functioning, even with high installation heights.

The low weight ensures quick installation. The weight for a panel, which is 6 m long and 87 cm wide, does not exceed 18 kg. These are by far the lightest heating and cooling panels available on the market. The cooling panels can also be supplied perforated, to ensure high sound absorption in office environments.

Lindab's heating panels are tested according to EN-14037. The cooling panels are Eurovent-certified and tested according to EN-14518.

Key figures

Lengths:	1.2 – 6.0 m
Width:	322 mm (33). 592 mm (60) and 862 mm (87)
Height:	60 mm
Capacity:	Atrium-H / Loggia, heating effect of up to 840 W Atrium C, cooling effect of up to 268 W

1 2 3 4 5 6 7 8 9 10 11 12 13 14 15 16 17 18 19

Heating and cooling panels

1
2
3
4
5
6
7
8
9
10
11
12
13
14
15
16
17
18
19

Function

Heating (Atrium-H, Loggia)

When warm water passes through the copper pipe, heat is transferred to the aluminium plate, with very little temperature loss. The panel is warmed and it then radiates the heat into the room. The thermal radiation travels tens of metres through the air without any loss of output on its way to the floor and walls. In this way, you avoid heating a large air mass that, when warm, sticks to the ceiling. Instead, the heat goes where it is needed the most.

It is mainly the floor, walls, furniture and fittings in the room that are heated. The temperature of the room surfaces becomes higher than that of the room air and thus transfers its heat to the air. By heating primarily the room surfaces instead of the air, you can save a lot of energy.

A more detailed description of how ceiling heating works is available in Lindab's Ceiling Heating Guide.

Cooling feature (Atrium-C)

When cold water passes through the panel, the heat of the aluminium plate is transferred to the cold water, with very little temperature loss. The panel partly chills the warm room air on its cold surfaces and, partly absorbs heat from the room via low-temperature radiation. In this way, the room is chilled via both radiation (approx. 50 %) and convection. The absorption of low-temperature radiation means that the surfaces of the room, and above all the floor, walls, furniture and fittings have a lower temperature than if then cooling was only convective. This means that storage of "cooling energy" is greater.

Design

The design of the panels is based on a world-patented method of joining a copper pipe to an aluminium plate. The aluminium plate is metallurgically bonded with the copper pipe (the materials are partially fused together under very high pressure). Due to this, the energy transport between the pipe and the plate is very efficient. The copper pipe has a rhomboid shape (see Picture 1), which ensures that turbulent flows are obtained quicker than with a round pipe and guarantees very good heat transfer even at low flow rates.

The water pipes are made of copper. Nevertheless, water should be oxygen-free to prevent corrosion.

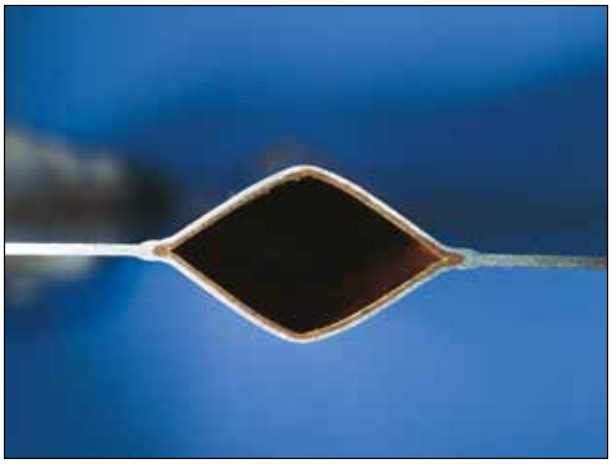

Picture 1. Cross-section of the metallurgically bonded copper and aluminium plates and the rhomboid water duct.

We reserve the right to make changes

Heating and cooling panels

Atrium H & C

Atrium-H is a heating panel. It is equipped with end-pieces and can be installed recessed into a suspended ceiling (see picture 2). The top of the panel is insulated with extruded polystyrene foam. The foamed plastic is manufactured without the addition of CFC or HCFC gas, i.e. Freons.

Atrium-C is a cooling panel. It is equipped with end-pieces and can be installed recessed into a suspended ceiling. The top of the Atrium-C is not insulated.

Atrium-H and C are available in a hygienic design with the top covered. The hygienic design is suitable for washing bays or suchlike.

Atrium-H should be used if the panel is to provide both cooling and heating with a so-called "Change-Over" system.

Picture 2. Atrium is equipped with end-pieces and can be installed recessed into a suspended ceiling.

Loggia

Loggia is the brand name of Lindab's heating strips. What distinguishes Loggia from Atrium-H is that it does not have end-pieces on its short sides. Loggia is therefore not designed for installation in the supporting structure of a suspended ceiling (see picture 3). Loggia is suited for industrial premises, for example, warehouses, show-rooms, etc. The top of the panel is insulated with extruded polystyrene foam. The foamed plastic is manufactured without the addition of CFC or HCFC gas, i.e. Freons.

Picture 3. Loggia is suitable for suspended installation in industrial premises.

Heating and cooling panels

1
2
3
4
5
6
7
8
9
10
11
12
13
14
15
16
17
18
19

Versions

The panels are available in three different versions:

Loggia, Atrium-H and Atrium-C
Loggia are heating strips without end-pieces for industrial use.

Atrium-H is equipped with end-pieces. Width 60 (600 mm) is adapted in size, -8 mm, so as to facilitate installation in a suspended ceiling using a standard T-profile with 600-mm module.

Atrium-C is a cooling panel and is supplied without insulation. Width 60 (600 mm) is adapted in size, -8 mm, so as to facilitate installation in a suspended ceiling using a standard T-profile with 600-mm module.

The panels are available in three different widths: 330 (width 33), 600 (width 60) and 870 mm (width 87). The height is always 60 mm.

Lengths: Available in lengths from 1.2 m to 6.0 m in steps of 0.1m.

Water connection: Available with four different connections, depending on the width of the product – 10, 12, 15 and 22 mm. This allows the pressure drop to be adjusted for different dimensioning cases.

Surface treatment: The panels are powder-coated; the standard colour is white, RAL 9010.

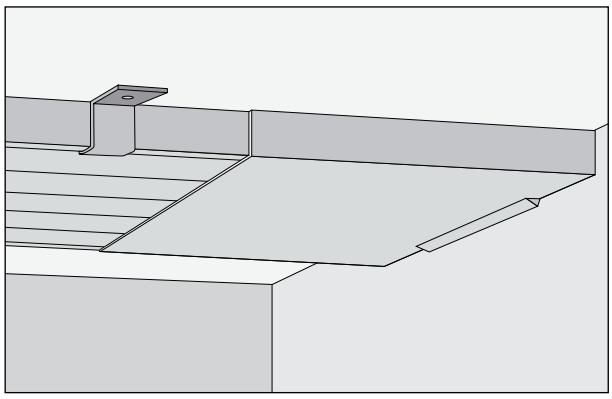

Figure 1. Atrium with connection cover.

Plus features

Factory preinstalled.

Colour: The panels can be coated in different special colours.

Perforation: A perforated cooling and heating panel provides increased sound attenuation in the room. With this option, the standard insulation of the panels is replaced with sound-absorbing mineral wool insulation. (see fig. 2). The available perforation is Dot 3 mm with a perforation degree of 25%.

Hygienic design: For premises with very high hygiene requirements, Atrium and Atrium-C are available with the top covered in aluminium and with the joints sealed with a white sealing compound. The panel can then be disinfected or rinsed.

Accessories

Delivered separately.

Control: Refer to separate brochure, Regula.

Connection cover: Conceals visible piping to a wall or in between panels (see figure 1). Indicate the length when you place your order.

Suspension options: Threaded rods and attachment hooks are included as part of the standard package (see figure 10). If the panel is to be installed on the ceiling, securing plates are available as an accessory (see figure 8).

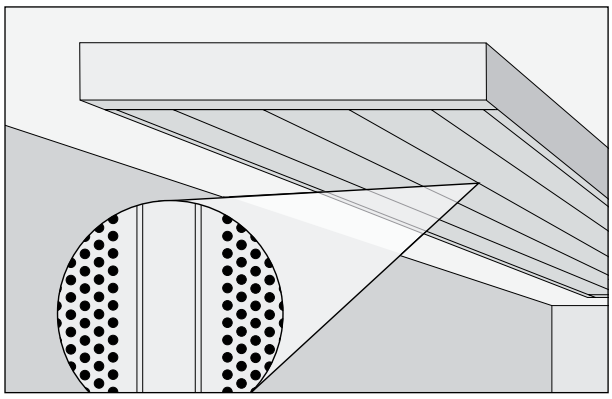

Figure 2. Atrium in perforated design.

We reserve the right to make changes

Heating and cooling panels

Dimensioning of heating panels Atrium-H and Loggia heating strips.

There are a number of things to think of when dimensioning heating panels. To achieve the best energy efficiency and as small a temperature gradient as possible and to utilise the high radiation quotient, you should take the following points into consideration:

The length and width of the ceiling surface should be greater than the height of the room and the room's furnishings should not consist of high walls or storage shelves. If this is the case, there is a risk that the thermal radiation is absorbed before it reaches the floor.

The capacity requirement in the lower part of the room should not be less than 60% of the total capacity requirement. Otherwise, the convective heat will not be utilised and the temperature gradient will rise.

There should not be any large uncoated horizontal metal surfaces under the heating strips, as these will reflect the thermal radiation. The floor should be insulated or positioned above the ground without running groundwater. (Otherwise, there is a risk that the floor will not be warmed sufficiently.) If some of these dimensioning recommendations are not fulfilled, the heating panels should be supplemented with ceiling fans that blow the warm air down from the ceiling to the occupied zone.

Follow the instructions below, to calculate the heating capacity (P_W) provided by the heating panel/heating strips.

1. Calculate temperature difference $\Delta t_{rw} = (t_{wi} + t_{wo})/2 - t_r$
   t_{wi} = inlet temp. t_{wo} = outlet temp. t_r = room temp)
2. Find Active length of chilled beam,
   L_{act} = (Product length minus 0.1 m)
3. In diagram 1, read off P_{Lt} (Specific cooling capacity) relative to active length at the calculated Δt_{rw} .
4. Heating capacity P_W [W] = P_{Lt} x L_{act}

Example1
What is the heating capacity (P_w) of a 6.0 m suspended Loggia 87?
The room's winter temperature is assumed to be 21° C
The heating water temperature in/out is 56/46° C

Answer
Δt_{rw} = (56°C+46°C) / 2 - 21°C = 30 K

L_{act}= 6.0 m - 0.1 m = 5.9 m

From diagram 1. P_{LT} = 280 W / active metre.

(P_W): 280 x 5.9 = 1652 W.

NB! The capacity diagram applies at the nominal flow rate in one strip of q_{wnom} = 0.011 l/s. Follow the steps in example 3 to obtain the correct capacity at other flows.

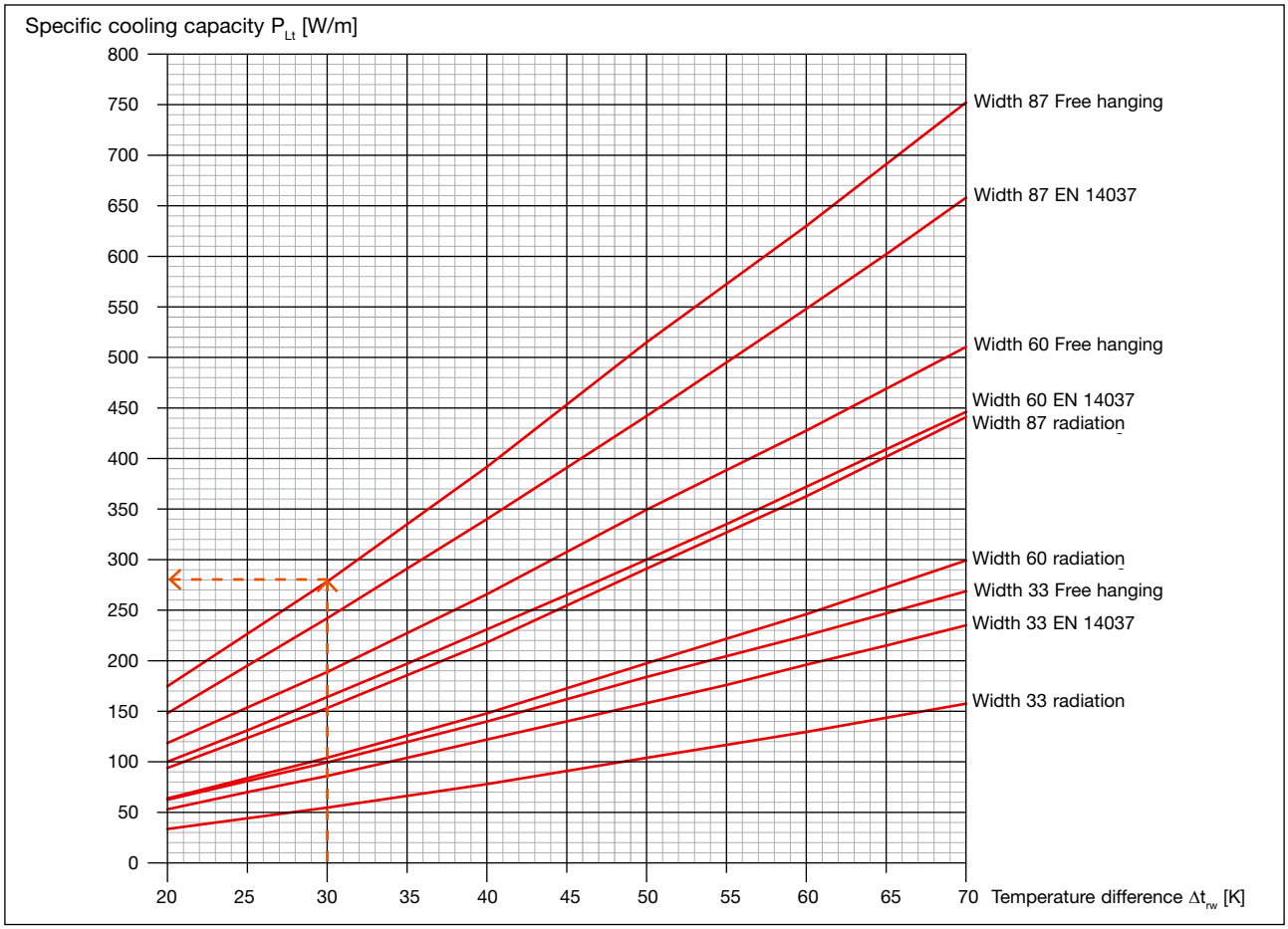

Diagram 1. Atrium-H and Loggia, heating capacity (P_w) per active length at nominal flow in one strip q_{wnom} = 0.011 l/s in relation to Temperature difference Δt_{rw} . Active length is the product length -0.1m.

Heating and cooling panels

1 2 3 4 5 6 7 8 9 10 11 12 13 14 15 16 17 18 19

Heating capacity, Loggia and Atrium-H

Heating capacity P_w [W] per product EN 14037 Temperature difference Δt_{rw} between mean water- and room temperature [K]											
Product length [m]	**Δt_{rw} = 20**	**Δt_{rw} = 25**	**Δt_{rw} = 30**	**Δt_{rw} = 35**	**Δt_{rw} = 40**	**Δt_{rw} = 45**	**Δt_{rw} = 50**	**Δt_{rw} = 55**	**Δt_{rw} = 60**	**Δt_{rw} = 65**	**Δt_{rw} = 70**
	Width 33										
1	52.5	70	86	104	122	140	158	176	196	215	235
1.2	58	77	95	114	134	154	174	194	216	236	258
1.8	89	119	146	177	207	238	269	299	333	366	400
2.4	121	161	198	239	281	322	363	405	451	494	541
3	152	203	249	302	354	406	458	510	568	624	682
3.6	184	245	301	364	427	490	553	616	686	753	823
4.2	215	287	353	426	500	574	648	722	804	882	964
4.8	247	329	404	489	573	658	743	827	921	1011	1105
5.4	278	371	456	551	647	742	837	933	1039	1140	1246
6	310	413	507	614	720	826	932	1038	1156	1269	1387
	Width 60										
1	100	131	164	197	231	265	300	335	372	409	446
1.2	110	144	181	217	254	291	330	368	409	450	491
1.8	170	223	280	335	393	451	510	570	632	695	758
2.4	230	301	378	453	531	610	690	770	856	941	1026
3	290	380	477	571	670	769	870	972	1079	1186	1293
3.6	350	459	576	690	809	928	1050	1173	1302	1432	1561
4.2	410	537	674	808	947	1087	1230	1374	1525	1677	1829
4.8	470	616	773	926	1086	1246	1410	1575	1748	1922	2096
5.4	530	694	872	1044	1224	1405	1590	1776	1972	2168	2364
6	590	773	971	1162	1363	1564	1770	1977	2195	2413	2631
	Width 87										
1	148	195	242	291	340	391	442	495	548	602	658
1.2	163	214	266	320	374	430	486	544	603	662	724
1.8	252	332	411	495	578	665	751	842	932	1023	1119
2.4	340	448	557	669	782	899	1017	1139	1260	1385	1513
3	429	566	702	844	986	1134	1282	1436	1589	1746	1908
3.6	518	683	847	1019	1190	1369	1547	1733	1918	2107	2303
4.2	607	800	992	1193	1394	1603	1812	2030	2247	2468	2698
4.8	696	917	1137	1368	1598	1838	2077	2327	2576	2829	3093
5.4	784	1034	1283	1542	1802	2072	2343	2624	2904	3191	3487
6	873	1151	1428	1717	2006	2307	2608	2921	3233	3552	3882

Table 1. Atrium-H and Loggia, heating capacity at the nominal flow in one strip q_{wnom} = 0.0115 l/s. (see table 3). Active length is the product length -0.1m.

We reserve the right to make changes

Heating and cooling panels

Dimensioning of cooling panel Atrium-C

Follow the instructions below, to calculate the cooling capacity provided by the cooling panel.

1. Calculate temperature difference Δt_{rw} :

$$\Delta t_{rw} = (t_{wi} + t_{wo})/2 - t_r$$

t_{wi} = inlet temp. t_{wo} = outlet temp. t_r = room temp.)

2. Find Active length L_{act} = Product length minus 0.1 m.

3. Read off the specific cooling capacity relative to active length (P_{Lt}) at the calculated Δt_{rw} for the selected product from diagram 2.

For suspended installation, the capacity increases by 10%, so multiply by 1.1.

4. Multiply the capacity per active metre by the active length.

$$\text{Cooling capacity } P_W \text{ [W]} = P_{Lt} \times L_{act}$$

Example 2

What is the cooling capacity of a 5.4 m Atrium-C 60, with Ø10 water connection and suspended installation?
The room's summer temperature (t_r) is assumed to be 24.5° C
The cooling water temperature in (t_{wi}) / out (t_{wo}) of Atrium is 14/17° C

Answer

Temperature difference Δt_{rw} :

$$\Delta t_{rw} = 24.5 - (14+17) / 2 = 9 \text{ K}$$

Active length L_{act} = 5.4 m - 0.1 m = 5.3 m

From diagram 2 at Δt_{rw} =9K => P_{Lt} = 59 W / m

Multiply the capacity by 1.1 (factor for suspended installation) => 59 x 1.1 = 64,9 ≈ 65 W /m

Multiply this reading by the active length:

Cooling capacity P_w = 65 x 5.3 ≈ 345 W.

NB! The capacity diagram applies at a nominal flow in one strip q_{wnom}= 0.025 l/s. Follow the steps in example 4, to obtain the correct effect at other flows.

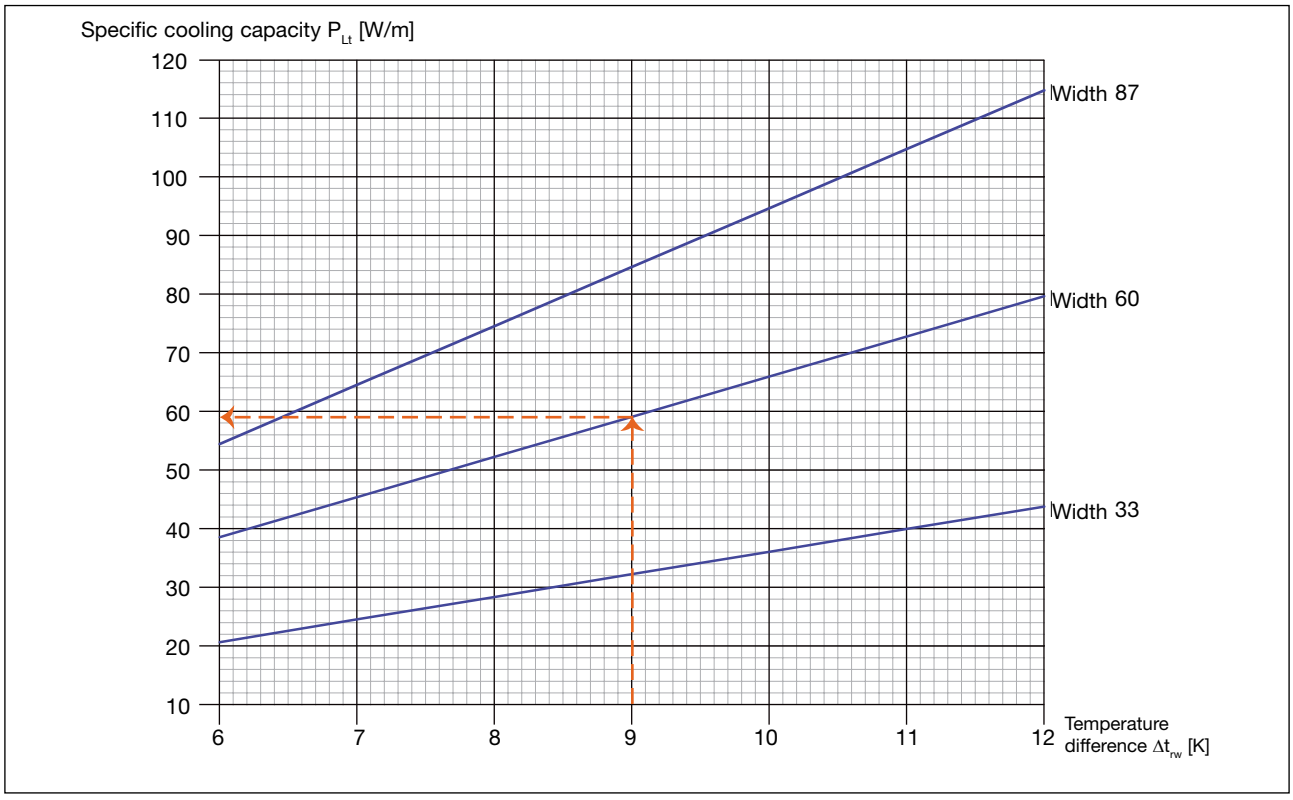

Diagram 2. Atrium-C installed on the ceiling, cooling capacity per active length at the nominal flow in one strip q_{wnom} = 0.025 l/s. Active length is the product length -0.1m.

Heating and cooling panels

Cooling capacity, Atrium-C

Cooling capacity P_w [W] per product EN 14518 Temperature difference Δt_{rw} between mean water– and room temperature [K]							
Product length [m]	**Δt_{rw} = 6**	**Δt_{rw} = 7**	**Δt_{rw} =8**	**Δt_{rw} = 9**	**Δt_{rw} = 10**	**Δt_{rw} = 11**	**Δt_{rw} = 12**
	Width 33						
1.2	20.7	24.6	28.4	32.3	36.1	40	43.8
1.8	35	42	48	55	61	68	74
2.4	48	57	65	74	83	92	101
3	60	71	82	94	105	116	127
3.6	72	86	99	113	126	140	153
4.2	85	101	116	132	148	164	180
4.8	97	116	133	152	170	188	206
5.4	110	130	151	171	191	212	232
6	122	145	168	191	213	236	258
	Width 60						
1.2	38.6	45.4	52.3	59.1	66	72.8	79.7
1.8	66	77	89	100	112	124	135
2.4	89	104	120	136	152	167	183
3	112	132	152	171	191	211	231
3.6	135	159	183	207	231	255	279
4.2	158	186	214	242	271	298	327
4.8	181	213	246	278	310	342	375
5.4	205	241	277	313	350	386	422
6	228	268	309	349	389	430	470
	Width 87						
1.2	54.5	64.6	74.6	84.7	94.7	104.8	114.8
1.8	93	110	127	144	161	178	195
2.4	125	149	172	195	218	241	264
3	158	187	216	246	275	304	333
3.6	191	226	261	296	331	367	402
4.2	223	265	306	347	388	430	471
4.8	256	304	351	398	445	493	540
5.4	289	342	395	449	502	555	608
6	322	381	440	500	559	618	677

Table 2. Atrium-C installed on the ceiling, cooling capacity at the nominal flow rate in one strip q_{wnom} = 0.025 l/s. (see table 3) Active length is product length -0.1 m.

For suspended installation, when the distance from the ceiling is at least 50 mm, the capacity increases. >50 mm from the ceiling: 1.1 x cooling capacity above.

We reserve the right to make changes

Heating and cooling panels

Correction of capacity P_w using the flow adjusted effect factor

Follow the steps below:

1. Calculate the water flow with the current capacity (P_w)
2. Read off the number of parallel circuits in table 1.
3. Calculate the water flow in one strip.
4. Read off the effect factor from diagram 3.
5. Multiply the capacity (P_w) by the effect factor (ϵ).
6. Repeat steps 1 through 5 with the new effect.

Example 3, Heating:

Loggia 87 with Ø15 water connection gives P_w = 1652 W. (From example 1, page 403).

Δt_w (water in – out) = 10 K

To calculate the water flow rate, use formula:

$q_w = P_w / (C_{pw} \times \Delta t_w)$

Where:
q_w = water flow rate [l/s]
P_w = Heating capacity water [W]
C_{pw}= specific heat capacity water [J/(kg·K)]
Δt_w = temperature difference in the water circuit in/out [K]
q_w = 1652 / (4200 x 10) = 0.0393 l/s

In table 3, read off the number of parallel circuits for Loggia 87 Ø15. The value is 3. Calculate the water flow rate in one strip:
0.0393 / 3 = 0.0131 l/s.

Read off the effect factor (ϵ) from diagram 3. The value is 1.01. Calculate the new capacity:
P_w = 1652 x 1.01 = 1669 W.

Use the new capacity to calculate the water flow rate:
q_w = 1669 / (4200 x 10) = 0.0397 l/s

Calculate the water flow rate in one strip :
0.0397 / 3 = 0.0132 l/s.

The new effect factor will then be 1.005 and the new capacity is calculated to be:
P_w = 1669 x 1.005 = 1677 W

Note ! Your calculations will be more accurate the more times you keep repeating step 1-5 !

Example 4, Cooling :

Atrium-C 60 5.4 with Ø10 water connection gives :
P_w = 345 W. (From example 2, page 405).

Δt_w (water in – out) = 3 K

To calculate the water flow rate, use formula :

$q_w = P_w / (C_{pw} \times \Delta t_w)$ => q_w = 345 / (4200 x 3) = 0.0273 l/s

In table 3, read off the number of parallel circuits for Atrium-C 87 with Ø10 connection. The value is 1. Calculate the water flow rate in one strip:
0.0273 / 1 = 0.0273 l/s.

Read off the effect factor from diagram 3. The value is 1.01. Calculate the new capacity:
P_w = 345 x 1.011 = 348 W.

Use the new capacity to calculate the water flow rate:
q_w = 348 / (4200 x3) = 0.0276 l/s

Read off the effect factor from diagram 3. The value is 1.013. Calculate the new capacity :
P_w = 345 x 1.013 = 349 W.

Size	Model		
	33	60	87
ø10	1	1	1
ø12	2	2	
ø15		4	3
ø22			6

Table 3. Number of parallel circuits for Atrium H & C - Loggia depending on model and connection option.

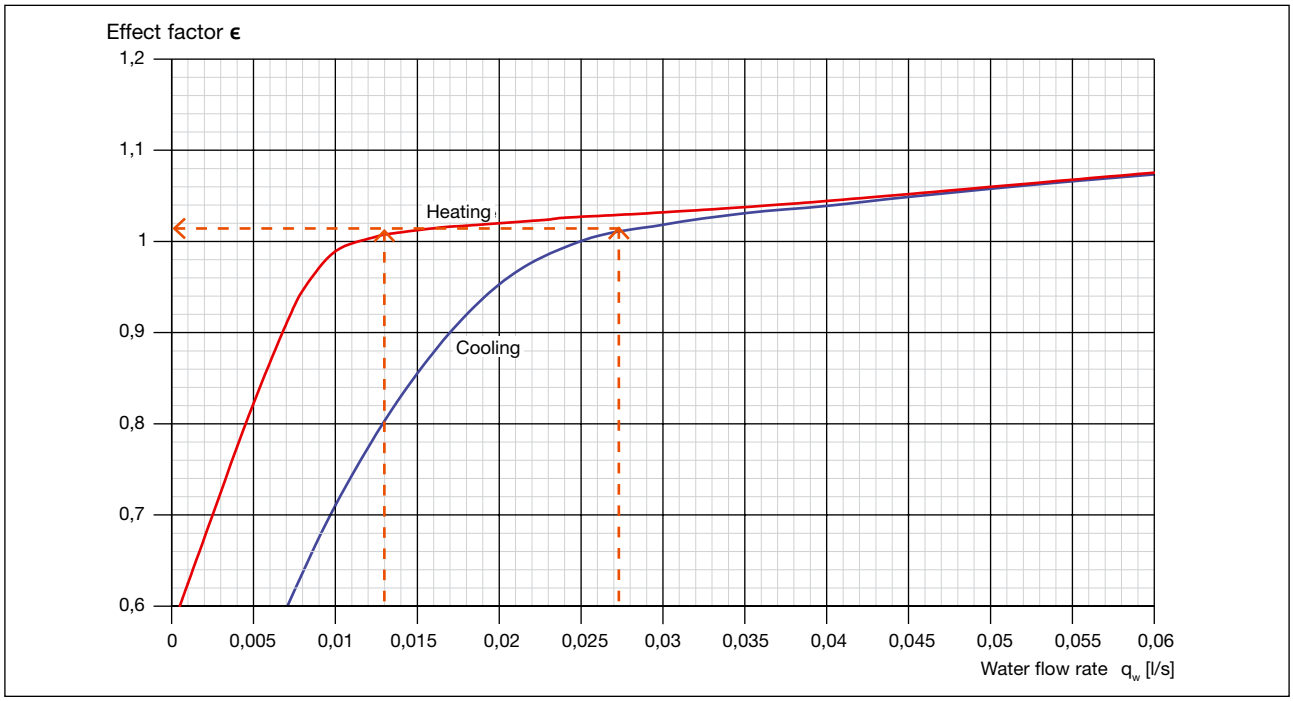

Diagram 3. Flow-adjusted effect factor.

Heating and cooling panels

1 2 3 4 5 6 7 8 9 10 11 12 13 14 15 16 17 18 19

Coupling & connection

Atrium-C, Loggia and Atrium-H are supplied in lengths of up to 6 metres. When the required length is longer than 6 metres, panels can be coupled in series.

Width 33		Width 60		Width 87	
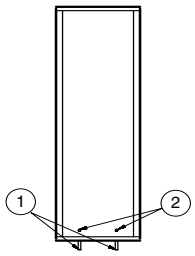		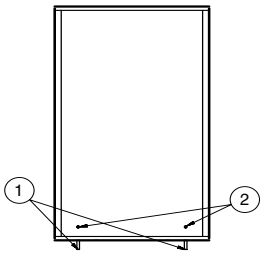		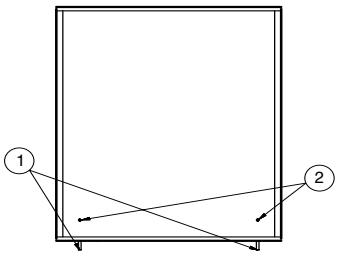	
Coupling options	Connection (mm)	Coupling options	Connection (mm)	Coupling options	Connection (mm)
1	10	1	10, 12	1	10, 15
2	10	2	10, 12	2	10, 15
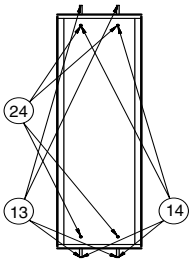		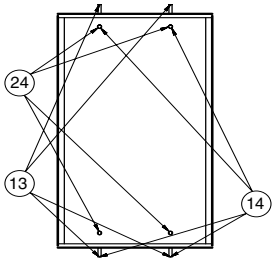		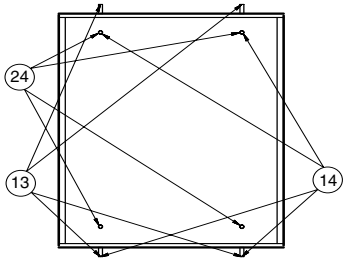	
Coupling options	Connection (mm)	Coupling options	Connection (mm)	Coupling options	Connection (mm)
13	10	13	12	13	15
14	10	14	12	14	15
24	10	24	12	24	15
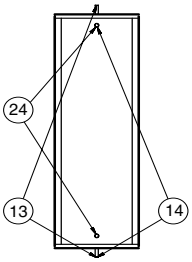		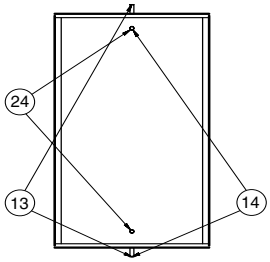		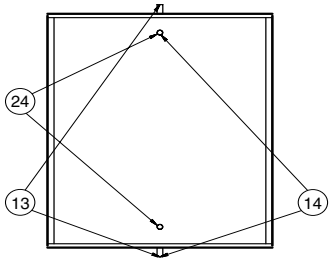	
Coupling options	Connection (mm)	Coupling options	Connection (mm)	Coupling options	Connection (mm)
13	12	13	15	13	22
14	12	14	15	14	22
24	12	24	15	24	22

Table 4. Atrium-C, Loggia and Atrium-H, coupling and connection options.

NB! Connections should be made with compression couplings, press couplings or Tectite.

When applying the Atrium beam into a false ceiling, *Coupling option 2* should always be used to clear the pipes from the supporting frames of the ceiling (T-bar).

We reserve the right to make changes

Heating and cooling panels

Coupling & Connection

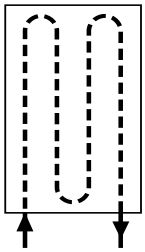	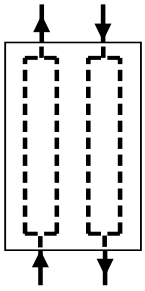	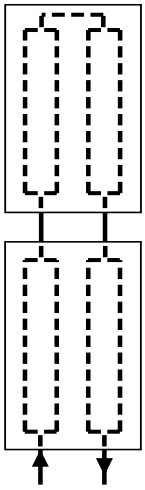	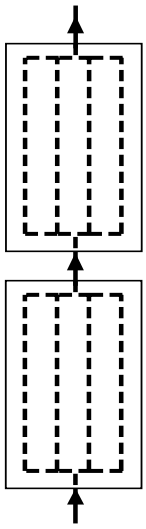
1 (1 connected)	13 (double circuit)	1+13 (1 connected + double circuit)	13+13 (straight through)
The supply and return for this model are located in the same end-piece. This coupling is only available with one pipe dimension per panel width. Width 33: Ø10 mm Width 60: Ø10 + Ø12 mm Width 87: Ø10 + Ø15 mm	This model has the supply in one end-piece and the return in the other one. This coupling is only available with one pipe dimension per panel width. Width 33: Ø10 mm Width 60: Ø12 mm Width 87: Ø15 mm	This model is a combination of 1 connected panel + 1 double circuit. This coupling is available with only one pipe dimension per panel width. Width 33: Ø10 mm Width 60: Ø12 mm Width 87: Ø15 mm	This model has the supply in one end-piece and the return in the other one. This coupling is only available with one pipe dimension per panel width. Width 33: Ø12 mm Width 60: Ø15 mm Width 87: Ø22 mm

Table 5. Atrium and Loggia coupling & connection

Minimum permitted flow q_{wmin} (l/s)	**Width 33**		**Width 60**		**Width 87**	
	Cooling	**Heating**	**Cooling**	**Heating**	**Cooling**	**Heating**
dim Ø10	0.013	0.015	0.013	0.015	0.013	0.015
dim Ø12	0.026	0.030	0.026	0.030		-
dim Ø15	-	-	0.052	0.060	0.039	0.045
dim Ø22	-	-	-	-	0.078	0.090
Max. working pressure (bar)	10					
Max. test pressure (bar)	16					

Table 6. Atrium and Loggia, recommended minimal water flow rates q_{wmin}.

NB! If the recommended minimal water flow rates q_{wmin} are maintained, the air becomes agitated. No separate bleeding is then required for Atrium. As normal, the bleeding of the coolant system takes place at peak points, in the equipment bay.

1 2 3 4 5 6 7 8 9 10 11 12 13 14 15 16 17 18 19

Heating and cooling panels

1 2 3 4 5 6 7 8 9 10 11 12 13 14 15 16 17 18 19

Width and height, cm

Figure 3. Atrium and Loggia are manufactured as standard in three widths, 33, 60 and 87 cm, and one height, 6 cm. Actual width dimension is -8 mm.*

Length, m

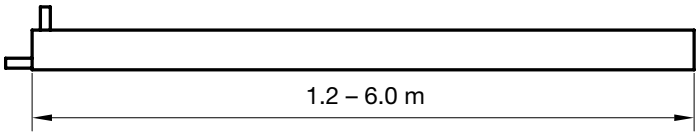

Figure 4. Atrium and Loggia are manufactured as standard in lengths from 1.2 m to 6.0 m in steps of 0.1 m.

Dimensions, mm

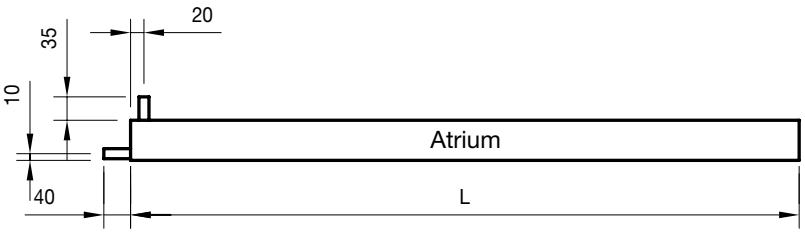

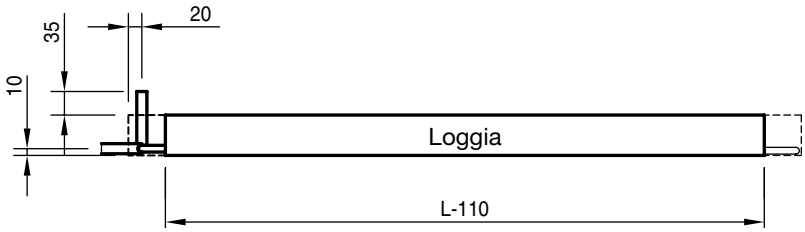

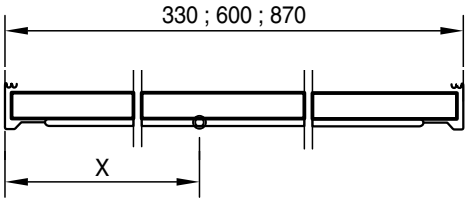

Connection:	Ø10	Ø12	Ø15	Ø22
X =	93	160	295	430

Table 5. Atrium and Loggia dimensions, water coupling & connection.

Weight and water volume

Panel width, cm	33	60	87
Weight, kg/m	1.3	2.2	3.1
Water content, l/m	0.18	0.35	0.53
Expansion at VS: +55/45° C	0.7 mm/m		
Expansion at VS: +80/60° C	1.2 mm/m		

Table 7. Atrium and Loggia, weight and water volume.

* The width fits a standard T support (600 mm modules)

We reserve the right to make changes

Heating and cooling panels

Installation examples

Atrium can be installed in three different ways; on to the ceiling (see figures 7 to 8), suspended (see figures 9 to 10) or integrated into a suspended ceiling (see figures 11 to 12). Securing plates are used for installation on the ceiling and support rods for installation in a suspended ceiling. Loggia is available for suspended installation and installation on the ceiling.

NB! Make sure that expansion factors are taken into consideration when the panels are mounted on the ceiling, for example, pipes between panels or pipes with fixed connections should be fitted with an extension loop.

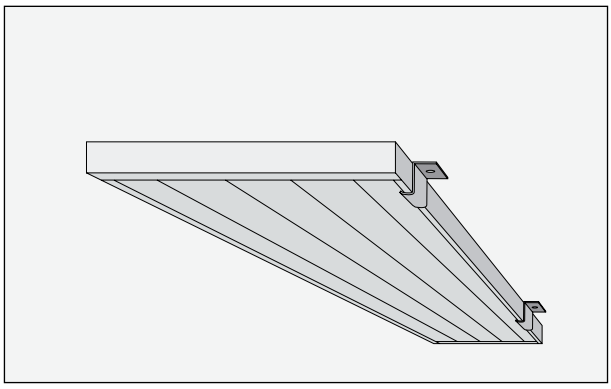

Figure 7. Atrium installed with securing plates on a ceiling.

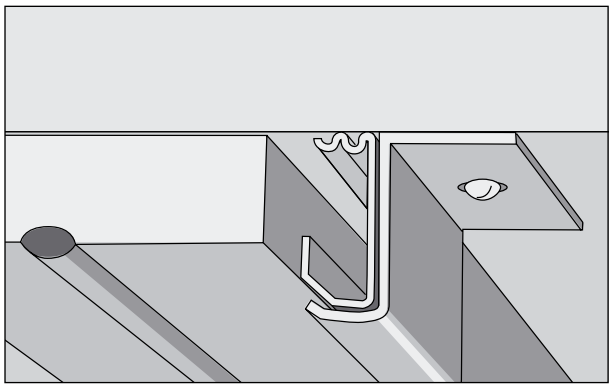

Figure 8. Atrium on a ceiling, securing plates.

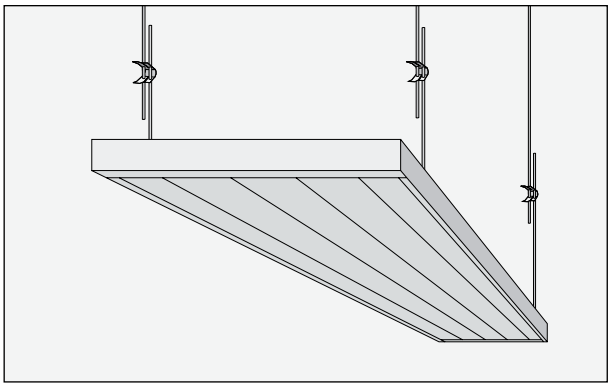

Figure 9. Atrium suspended on adjustable drop rods.

Figure 10. Atrium suspended on adjustable drop rods.

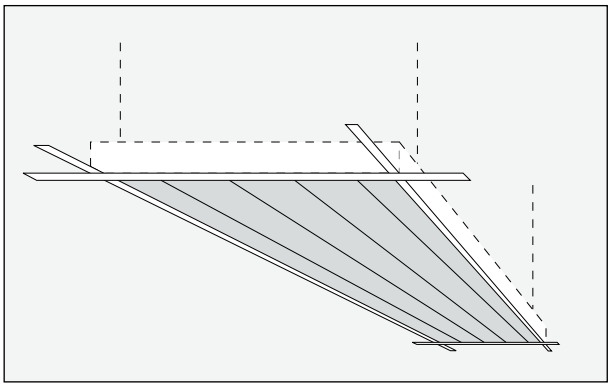

Figure 11. Atrium integrated into a suspended ceiling, support rods are recommended.

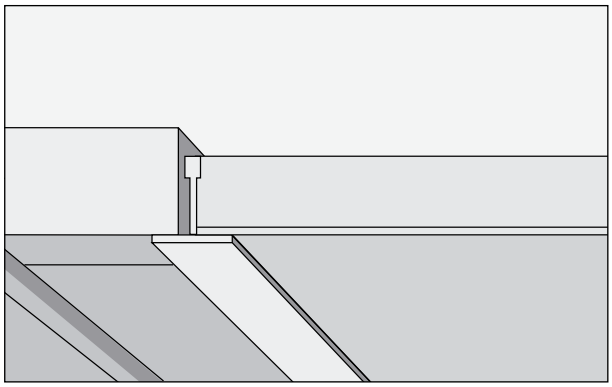

Figure 12. Atrium integrated with support rods in a suspended ceiling.

Heating and cooling panels

1 2 3 4 5 6 7 8 9 10 11 12 13 14 15 16 17 18 19

Flow – pressure drop for coupling 1

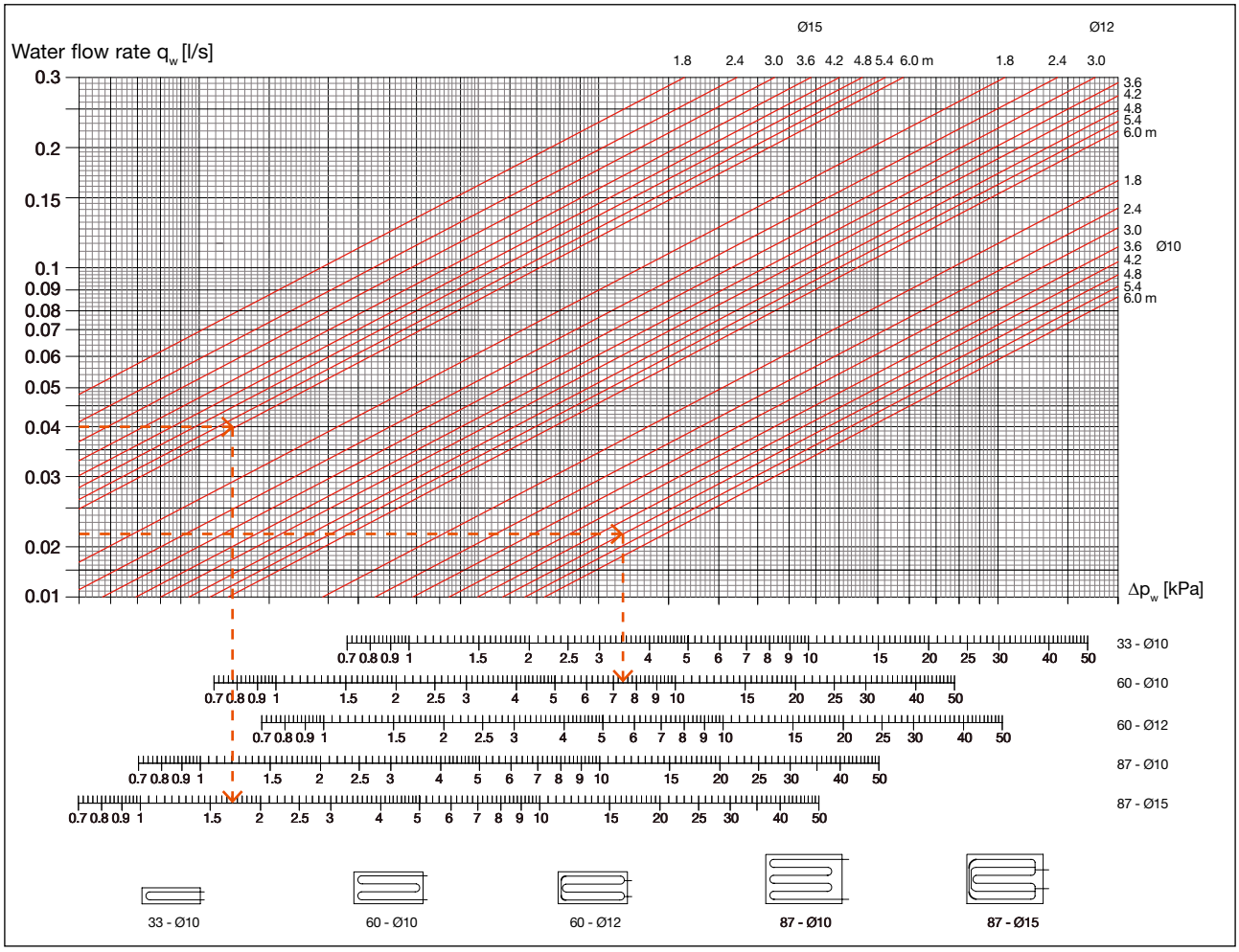

Diagram 4. Panels, pressure drop at 60° C. For pressure drops at temperatures other than 60° C, the pressure drop is multiplied by the pressure drop factor (see diagram 7).

Example 5:
Loggia 6 m with Ø15 water connection gives an output of:
Capacity P_w = 1669 W at Δt_w = 10 K , T_{wio}= 51° C ,
q_w = 1669 / (4200 x10) = 0.040 l/s

The pressure drop in the water circuit is read off at 1.7 kPa from diagram 4.

Read off the pressure drop factor at 50° C from diagram 4.
The value is 1.04.
Calculate the new pressure drop: 1.7 x 1.04 = 1.8 kPa.

Example 6:
Atrium-C 60 4.8 m with Ø10 water connection gives an output of:
Capacity P_w = 270 W , Δt_w = 3 K , T_{wio} = 15° C
q_w = 270 / (4200 x3) = 0.0215 l/s

The pressure drop in the water circuit is read off as 7.4 kPa from diagram 4.

Read off the pressure drop factor at 15° C from diagram 7.
The value is 1.19.
Calculate the new pressure drop: 7.4 x 1.19 = 8.8 kPa.

$q_w = P / (C_{pw} \times \Delta t_w)$

q_w = Water flow [l/s]
P_w = Capacity [W]
C_{pw} = Specific heat capacity [J/(kg·K)]
Δt_w = Temperature difference in the water circuit in/out [K].
T_{wio} = Mean temperature water

We reserve the right to make changes

Heating and cooling panels

Flow – pressure drop for coupling 13

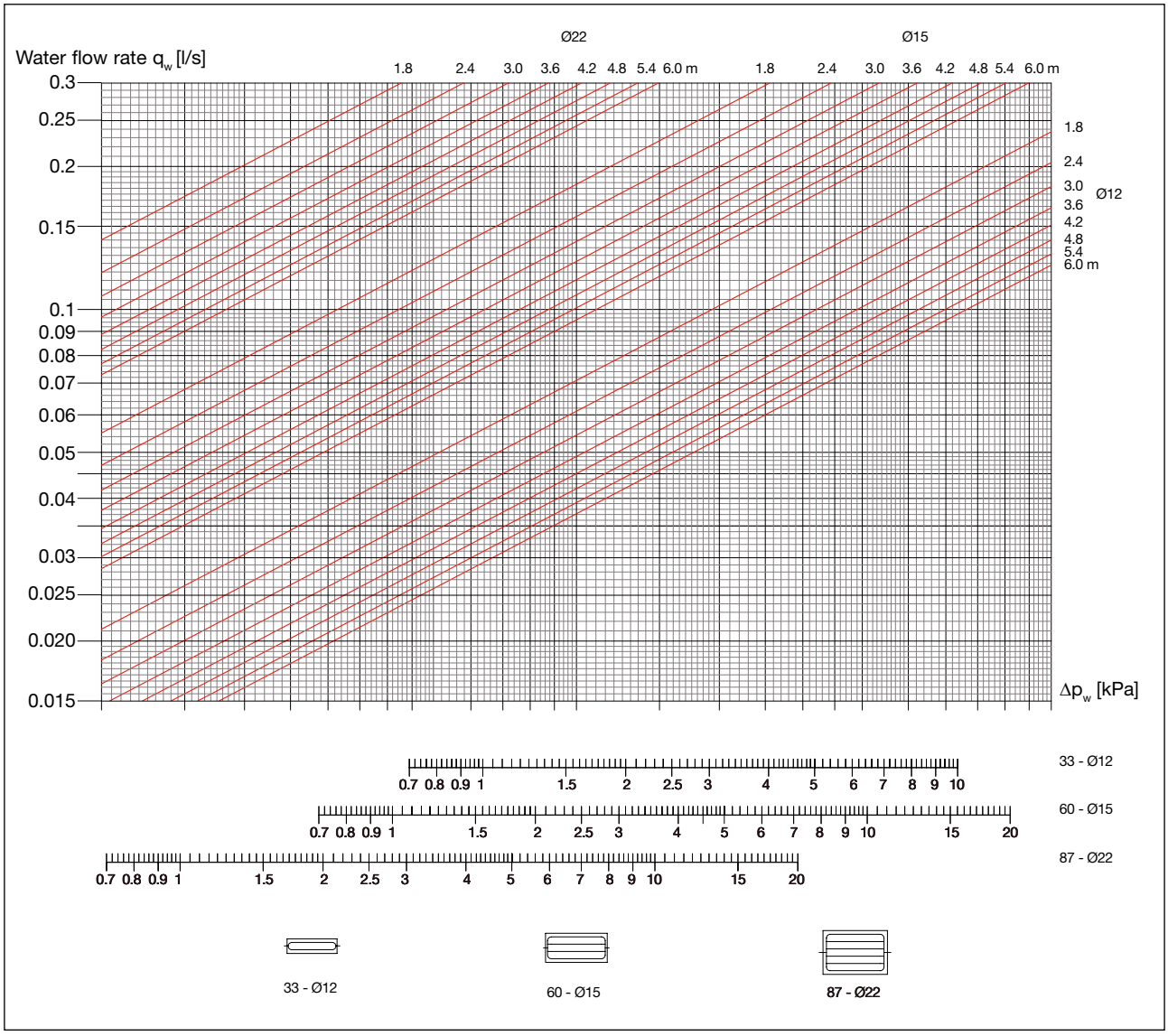

Diagram 5. Panels, pressure drop at 60° C. For pressure drops at temperatures other than 60° C, the pressure drop is multiplied by the pressure drop factor (see diagram 7).

Heating and cooling panels

Flow – pressure drop for coupling 1 + 13

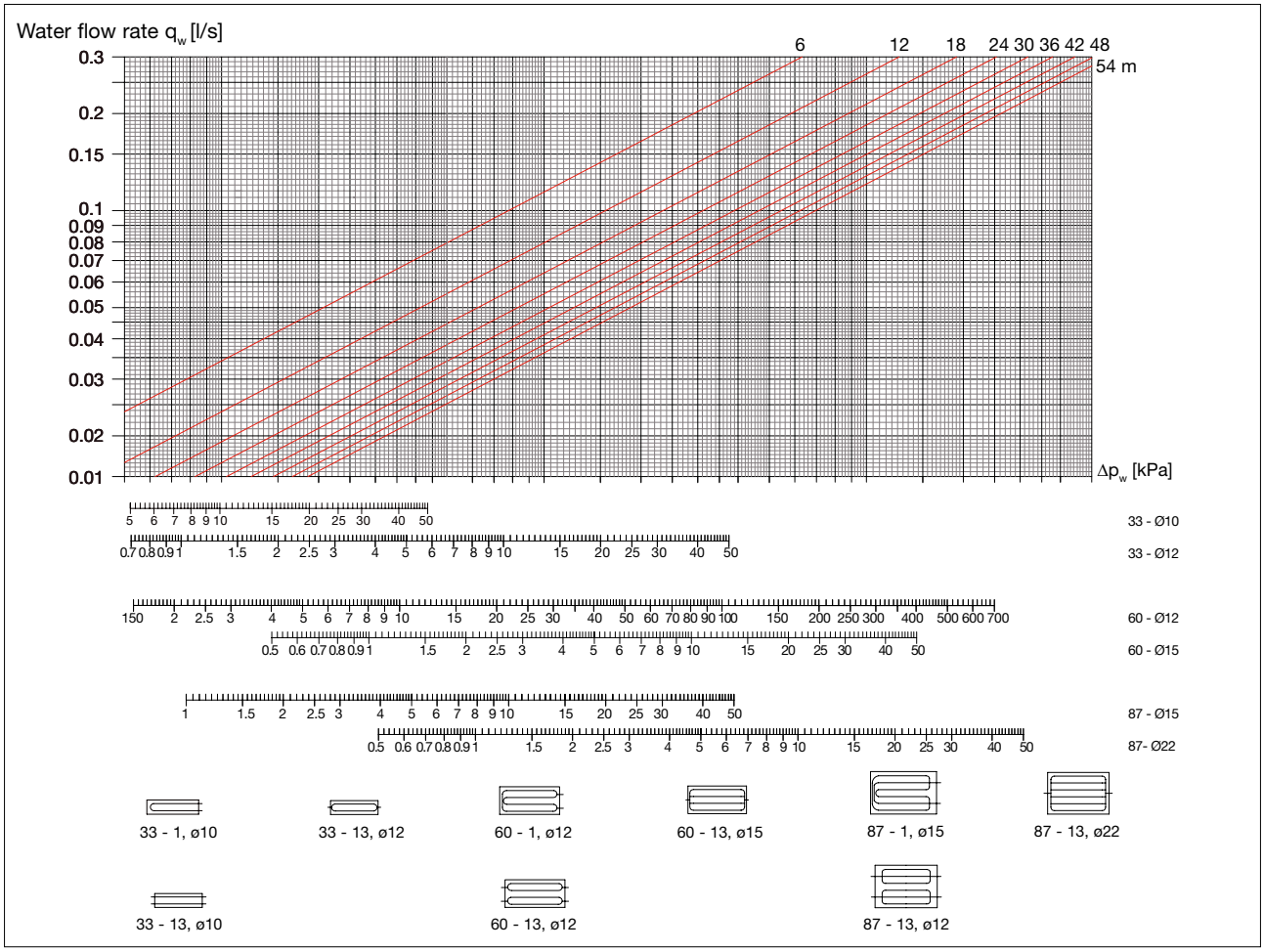

Diagram 6. Panels, pressure drop at 60° C. For pressure drops at temperatures other than 60° C, the pressure drop is multiplied by the pressure drop factor (see diagram 7).

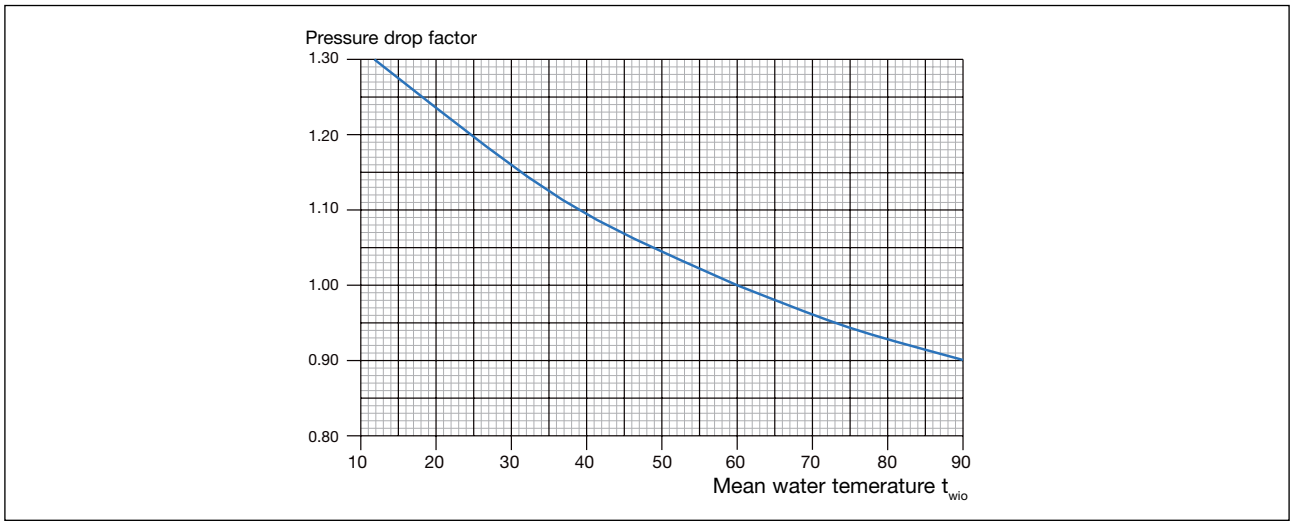

Diagram 7. Flow-adjusted effect factor - Temperature

We reserve the right to make changes

Heating and cooling panels

Control

Lindab offers control equipment that is very simple to use. To avoid heating and cooling being activated at the same time, the systems are controlled sequentially (Regula Combi). For the technical data, refer to a separate brochure, Regula.

Colour

Heating and cooling panels are powder-coated as standard in white, RAL 9010, gloss value 30. Other colours may be ordered specially.

Designations

Product:	**Atrium-C, Atrium-H, Loggia**
Width, cm:	33, 60, 87
Connection dim. Water, mm:	10, 12, 15, 22
Coupling options:	1, 2, 13, 14, 23, 24
Length, m:	1.2 m – 6.0 m
Plus features:	See page 402

Programme text

Panels from Lindab	**Qty**
Product	
Atrium-H - 60 - 10 - 1 – 4.8 m	10
Plus features:	
Hygienic design	
Accessories:	
Connection cover, length = 300 mm:	10
Product	
Atrium-C - 87 - 15 - 1 – 6.0 m	30
Plus features:	
Colour, RAL 9005 (black)	
Perforation	
Accessories:	
Regula Combi	30
Regula Secura	30
Control valve, cooling	30
Actuator, cooling	30

Regula

Contact, Overview, Index	1
Guideline heating and cooling	2
Plexus	3
Professor	4
Pilot	5
Architect	6
Polaris I & S	7
Plafond	8
Podium	9
Celo	10
Cabinett	11
Capella	12
Carat	13
Fasadium	14
Atrium H & C /Loggia	15
Regula	**16**
Drypac™	17
Lighting	18
TEKNOsim	19

© 03.2011 Lindab Ventilation A/S. All forms of reproduction without written permission are forbidden. Lindab® is the registered trademark of Lindab AB.
Lindab's products, systems, product and product group designations are protected by intellectual property rights (IPR).

Regula

Overview

Use
Customized control equipment for water and airborne climate systems with individual regulation.

Regula Mono controls either heating or cooling.

Regula Duo controls heating and cooling in sequence.

Regula Combi can control heating and cooling in sequence, VAV in combination with heating and cooling, Change-Over systems, as well as communicate with Modbus/EXOLine master systems.

Regula Connect is a connection card for the flexible connection of facade systems and chilled beams.

Regula Secura is a condensation guard for installation in façade systems and chilled beams, which prevents condensation forming.

Regula Mono, Regula Duo, and Regula Combi are available for integrated installation in products or directly on the wall. Regula Secura and Regula Connect are integrated in or on products.

Worth noting

- Regula Combi is a microprocessor-based PI controller with pulsing ON/OFF signal.
- Regula Combi can control with ON/OFF and/or 0-10 V signal.
- Regula Combi can control chilled beams in combination with VAV devices.
- Regula Combi has 5 pre-defined operating programs.
- Regula Combi is provided with 4 inputs and 3 outputs.
- Regula Combi communicates via Modbus or EXOline.
- Regula Secura prevents condensation.

Regula Mono

Regula Duo

Regula Combi

Regula Connect

Regula Secura
(Regula Secura with condensation sensor)

1 2 3 4 5 6 7 8 9 10 11 12 13 14 15 16 17 18 19

Regula

Regula Mono and Duo

Function
Regula Mono/Duo is used for room individual temperature control, where the desired temperature can be adjusted easily within ±4°C using the control knob. The standard setting is 21°C. The set point for the desired value can be adjusted with a potentiometer between 15 and 25°C.

Regula Mono/Duo is available for integrated installation in products, or directly on the wall. Regula Mono controls either cooling or heating, while Regula Duo controls cooling and heating. A maximum of 10 actuators can be connected to the same control centre. The actuators are mounted on heating and cooling valves that open and close the heating or cooling circuits, respectively, depending on whether the room needs to be heated or cooled. The control signal governing this process is transmitted by Regula Mono/Duo, which compares the desired value (the desired temperature) and the actual value (the actual temperature) using built-in or external temperature sensor. The system continuously strives to equalise these temperature values as quickly as possible. Regula Mono is factory preset to regulate cooling but can be set to regulate heating.

Regula Combi

Function
Regula Combi is a zone controller for integrated installation in products or directly on the wall. Regula Combi has a built-in temperature sensor and can use input from presence sensor, CO2 sensor, condensation detector and an external temperature sensor (for Change Over systems).

For thermal on/off actuators Regula Combi controls digitally with time proportional pulses. By pulsing, the opening degree of the actuator (and its valve) is varied. The period time (10s) is the sum of the on and off output times on the output.

The controller varies the on and off output times proportionally depending on the output signal demand to the actuator. Alternatively 0-10V output can be chosen. A maximum of 10 actuators can be connected to the same controller.

Through its three outputs, Regula Combi can control only heating and/or cooling, as well as heating, cooling and forced cooling in sequence.

The controller has four inputs. One for presence sensor, one for CO2 (0-10V), one for condensation detector and one for a Change Over temperature sensor (PT1000).

Regula Combi has 5 predefined programs which can be selected in the Service menu in the display.

The temperature setpoint value can be adjusted up and down from the basic set point values via the display (default +/-3°C) in steps of 0.5 °C. On cooling demand it will control according to the cooling set point, and on heating demand it will control according to the heating set point.

The set point change takes place halfway between the set points with a hysteresis of 0.1°C.

Regula Combi can also be set to operate Change Over systems, where the change over happens either via a digital signal or via an external temperature sensor in the heating/cooling media.

The display has indications for heating/cooling state, actual temperature and set point temperature when pressing increase/decrease buttons, and icons for the operating modes.

Regula Secura

Function
Regula Secura is a condensation guard for both chilled beams and facade systems, which works together with electronic control systems such as Regula Combi or any other equipment with thermoelectric actuators. If there is condensation on the supply pipe, Regula Secura's humidity sensor gives a signal that cuts the power to the cooling.

Regula Connect

Function
Regula Connect is a connection card that provides flexible connection for chilled beams or facade systems.

Regula Connect consists of a connection card with connectors for main cables, thermostat cables and terminal blocks for actuator cables.

Regula Combi

Predefined programmes
The controller has 5 predefined programs which is selectable in the Parameter menu (Service) on the display. The parameter menu is accessed by simultaneously holding the increase and decrease buttons depressed for about 5 seconds and then pressing the increase button twice, then the Service indication will be displayed. First the display will show the parameter number 0. By pressing the Occupancy button the 0 will be replaced by the program number. Scroll between programs by using the increase and decrease buttons.

To acknowledge and store a set program value, press the Occupancy button again, the display then returns to showing the parameter number 0. Otherwise to retrieve the original value, i.e. the value before change, press the increase and decrease buttons at the same time, then the original value is shown on the display.

1. Water (default)
2. VAV
3. eHybrid
4. Change Over digital
5. Change Over sensor

As a supplement program 0 can be chosen. This will apply the standard mode of Regin Regio Midi RC-CDOC and will activate the full parameter list with Regins default settings.

We reserve the right to make changes

Regula

Program descriptions

1. Water
The regulation of temperature takes place in sequences with heating, cooling and forced (cooling) ventilation by signals from the universal outputs UO1 (heating), UO2 (cooling) and UO3 (forced cooling ventilation).The temperature is controlled according to diagram 1. Set points are adjustable.

Operating mode Standby occurs after 30 min (adjustable) if a presence sensor is connected and signal is given, then the neutral zone increases with +/- 2°C (to heating set point 19°C and cooling set point 24°C).

If a CO2 sensor is connected the universal output signal UO3 will be affected according to the CO2 sequence. The major requirement from the second part of the cooling sequence and the CO2 sequence will control the UO3 signal.

If UO3 ascends to 100% signal, Bypass operating mode will be activated for 45 min (adjustable). Bypass can also be activated by pressing the Occupancy button once (for less than 5 seconds).

The universal outputs for UO1 and UO2 is default set to thermal on/off actuators. UO3 is default set to 0-10V.

Heating and cooling actuators (UO1and UO2) are exercised every 23 h.

2. VAV
The regulation of temperature takes place in sequences with heating and cooling by signals from the universal outputs UO1 (heating) and UO2 (cooling). The universal output UO3 (forced cooling ventilation) will be activated with 100% signal by pressing the Occupancy button (Bypass operating mode).

As default the UO2 signal will also change to 100% when pressing the Occupancy button.

The temperature is controlled according to diagram 2. Set points are adjustable.

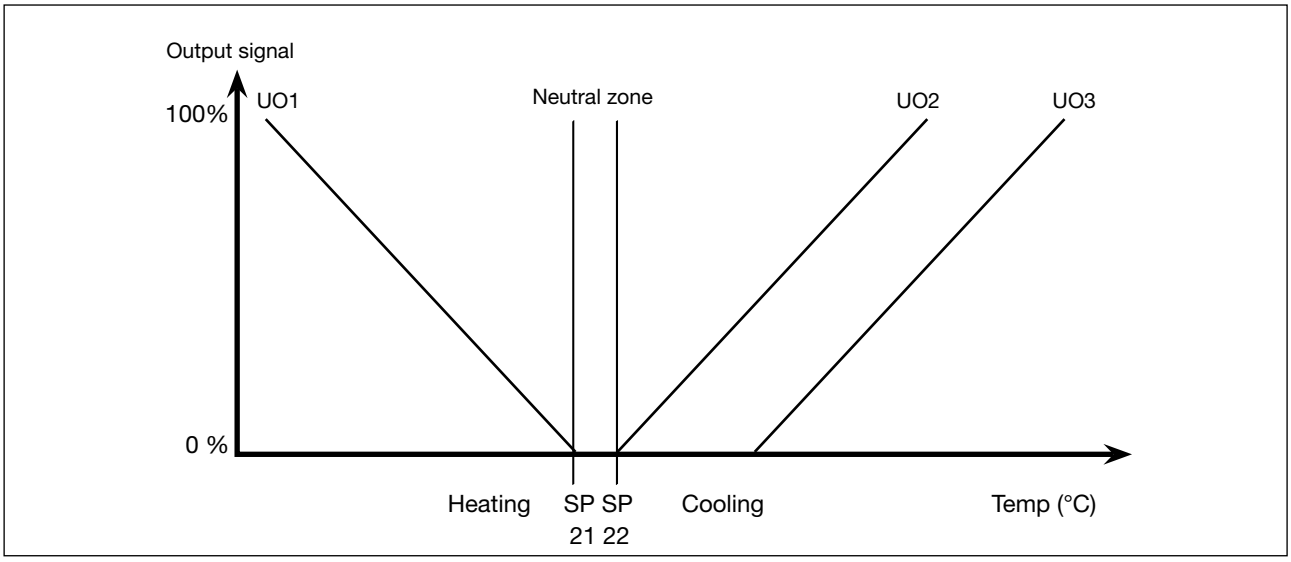

Diagram 1. Temperature sequences for program 1 water.

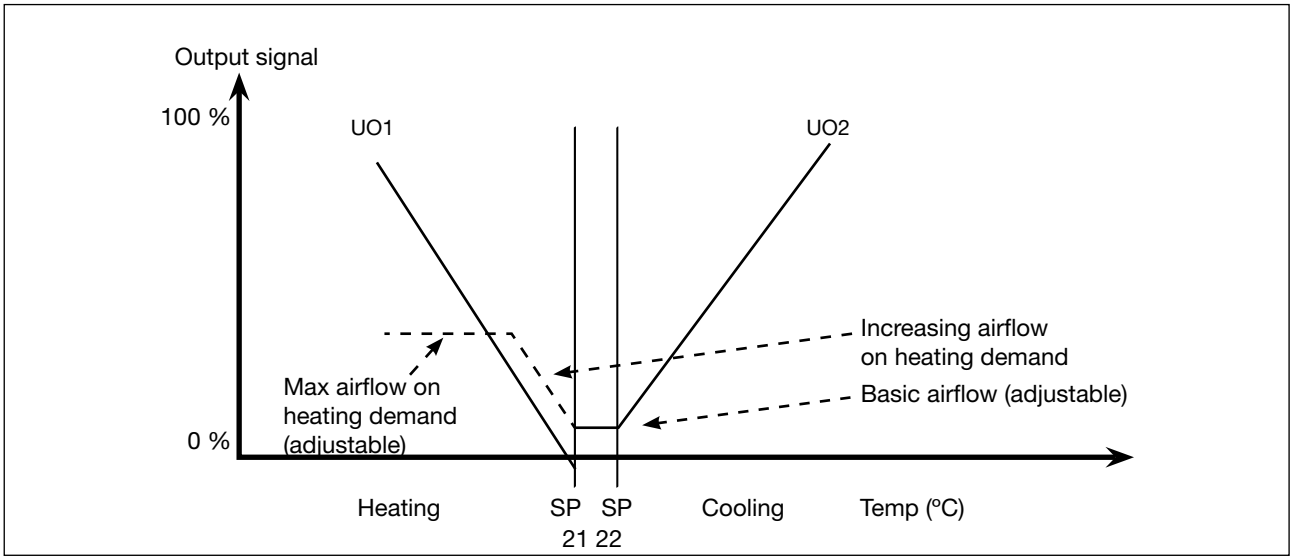

Diagram 2. Temperature sequences for program 2 VAV

Regula

The basic airflow is set to 20% (default), so the cooling sequence will result in signals from 20-100%. By pressing the Occupancy button for more than 5 seconds operating mode Off will occur, that will change the UO2 signal to 0% regardless of cooling or heating demands. This match Lindab volume flow regulator functions.

A heating function for UO2 can be activated (by changing parameter 11 to value 5 instead of 4). This will allow UO2 to follow the heating signal UO1 to a free chosen max level (parameter 49) when there is heating demand. This should only be used when having heated air (above room temperature) in the duct e.g. by connecting UO1 to a duct heater. If the heating function on UO2 is activated forced cooling ventilation by pressing the Occupancy button will not lead to 100% signal on UO2.

Operating mode Standby occurs after 30 min (adjustable) if a presence sensor is connected and signal is given, then the neutral zone increases with +/- 2°C (to heating set point 19°C and cooling set point 24°C).

If a CO2 sensor is connected the universal output signal UO2 will be affected according to the CO2 sequence. The major requirement from the cooling sequence and the CO2 sequence will control the UO2 signal.

Bypass operating mode with UO2 and UO3 = 100% signal will be activated for 45 min (changeable) by pressing the occupancy button once (for less than 5 seconds).

The universal outputs for UO1, UO2 and UO3 are default set to 0-10V.

Heating and cooling actuators (UO1 and UO2) are exercised every 23 h.

3. eHybrid

The regulation of temperature takes place in sequences with heating and cooling by signals from the universal outputs UO1 (heating) and UO2 (cooling). The sequence of UO3 is depending on whether there is occupancy or not. At operating mode Occupied UO3 = 100%. At Standby UO3 is following the cooling signal UO2 and the heating signal UO1 to a changeable max limit (default is 0%, so as default the UO3 damper will stay closed at heating demands). See the sequences below. Set points are adjustable.

Operating mode Standby occurs after 30 min (adjustable) if a presence sensor is connected and signal is given, then the neutral zone increases with +/- 2°C (to heating set point 19°C and cooling set point 24°C).

The universal outputs for UO1 and UO2 is default set to thermal on/off actuators. UO3 is default set to 0-10V. Heating and cooling actuators (UO1 and UO2) are exercised every 23 h.

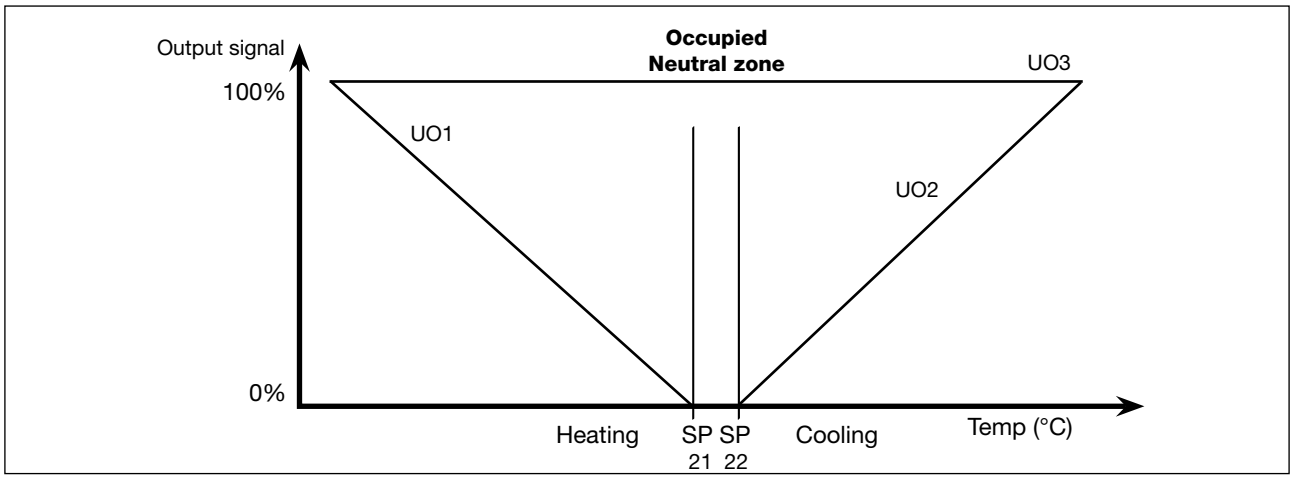

Diagram 3.

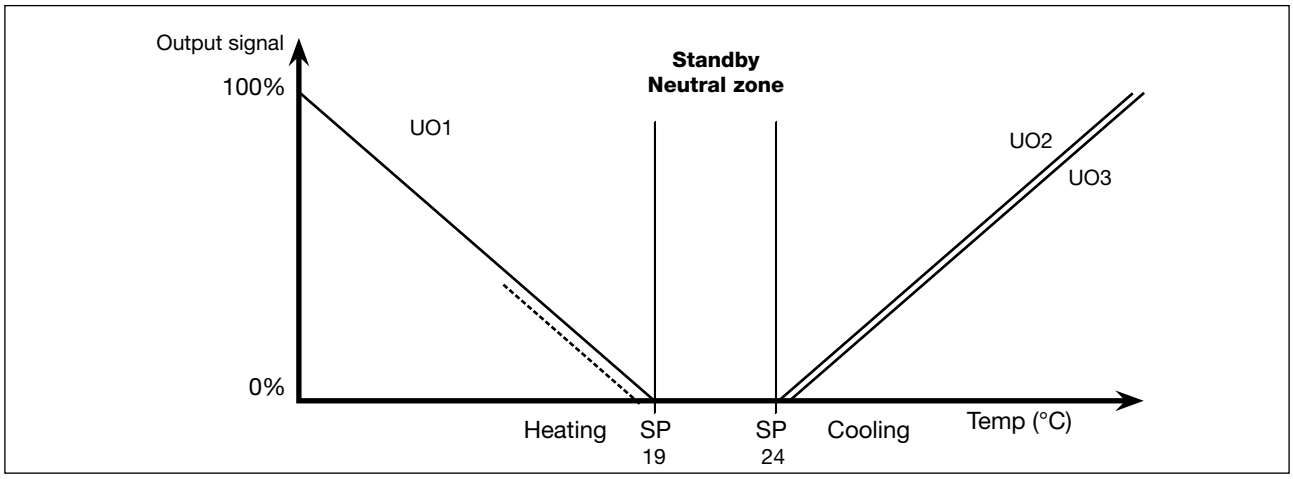

Diagram 4.

We reserve the right to make changes

Regula

4. Change Over digital
Change-over is a function, which makes it possible to use the same pipe/duct for both heating and cooling, depending on requirements during for example summer (cooling output) and winter (heating output).

When using the digital signal input DI2 (potential-free contact), closing the contact switches the change-over function and sets the output UO1 to cooling sequence.

On open contact, the change-over function sets the output UO1 to heating. Sequences for temperature, CO_2 and occupancy functions is as Program 1 Water. Universal outputs for UO1 and UO3 is default set to 0-10V. UO2 is not active.

5. Change Over sensor
Change-over is a function, which makes it possible to use the same pipe/duct for both heating and cooling, depending on requirements during for example summer (cooling output) and winter (heating output).

The Pt1000-sensor connected to AI1 must be mounted so that it senses the temperature in/on the heating/cooling media.

If the media temperature is higher than the room temperature the heating sequence is active on UO1. If the media temperature is lower than the room temperature the cooling sequence is active on UO1. When valves/dampers are closed, water/air will be stagnant at the media temperature sensor, so in this program there is exercise of the valves/ dampers for 10 min every 3 h (adjustable). In the exercise period the difference between room temperature and media temperature is checked. If the difference is larger than 3 K (changeable) for heating or 4 K (changeable) for cooling then there will be 0% output on UO1 until next exercise.

Sequences for temperature, CO2 and occupancy functions are as Program 1 Water. Universal outputs for UO1 and UO3 is default set to 0-10V. UO2 is not active.

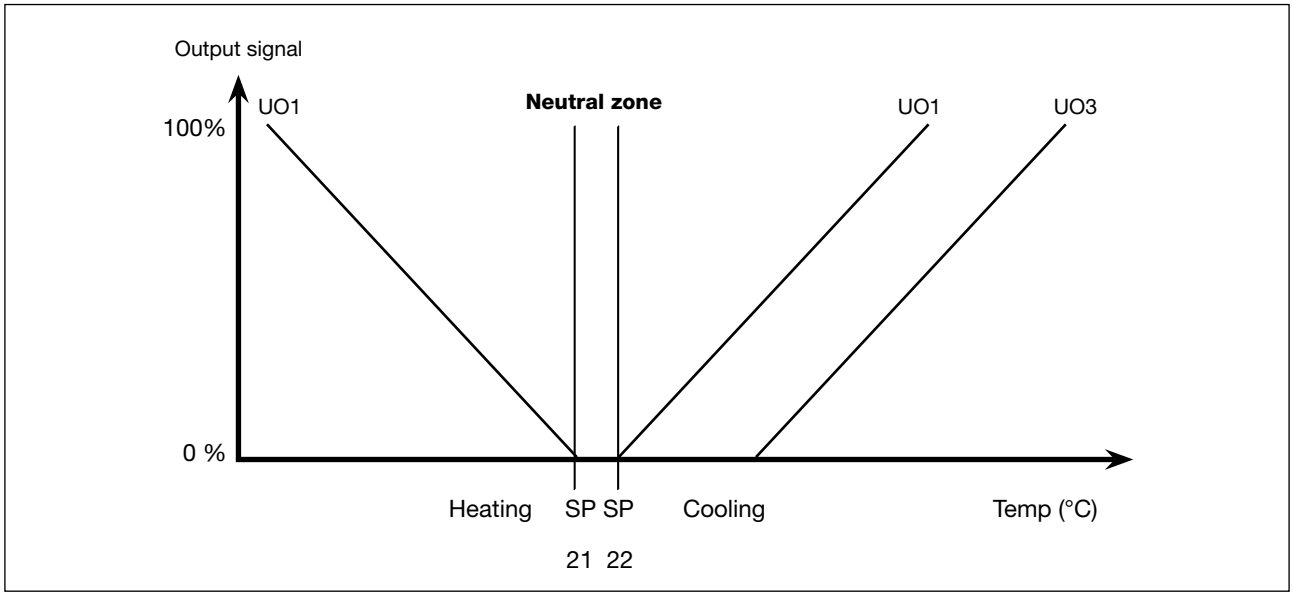

Diagram 5.

Regula

1
2
3
4
5
6
7
8
9
10
11
12
13
14
15
16
17
18
19

Operating modes

Regula Combi is based on Regin Regio Midi RC-CDOC which has five different operating modes: Off, Unoccupied, Standby, Occupied and Bypass.

Operating mode **Off** means that the controller is not heating or cooling. However, the temperature must not drop below a set minimum temperature (8°C). If it does, the controller will start heating. In the display the background lighting is not lit, and only OFF is shown in the display. (Off can be reached by pressing the Occupancy button for more than 5 seconds.)

Operating mode **Unoccupied** is not used in Regula Combi programs. Operating mode **Standby** means that the room is in energy save mode. The controller is prepared to change operating mode to Occupied (comfort) if someone enters the room (presence). The room temperature is controlled around the applicable heating and cooling set points, with an extended temperature interval (default +/-2°C). For example, with the default heating set point = 21°C and the default cooling set point = 22°C, the controller will allow the temperature in the room to be between 19°C and 24°C without giving output signals. In the display the background lighting is lit (dimmed).

STANDBY and the current room temperature (or set point depending on the configuration) are shown in the display.

Operating mode **Occupied** means that the room is in use and is therefore in a comfort mode. The controller regulates the room temperature around the heating set point (default 21°C) and the cooling setpoint (default 22°C). The set points can be adjusted +/- 3°C locally with the increase/decrease buttons.

In the display the background lighting is lit (dimmed), and the occupancy indication is shown (see Display handling and indications). The current room temperature (or set point depending on the configuration) is also shown in the display.

Operating mode **Bypass** means that the controller controls the room temperature in the same way as in operating mode Occupied, but the output for forced ventilation is active with full signal (100%). After a configurable time (default 45 min) in Bypass, the controller automatically returns to the preset operating mode. Bypass is activated when the Occupancy button is pressed once (for less than 5 sec), or if 100% cooling signal is needed (because of too high room temperature or CO2 level). The operating mode is useful for example in conferencerooms, where many people are present at the same time for a certain period of time. In the display the background lighting is lit (dimmed).

The occupancy indication and the symbol for forced ventilation are shown (see Display handling and indications). The current room temperature (or setpoint depending on the configuration) is shown in the display.

The preset operating mode is Standby, but the digital input DI1 for presence sensor is set default to NC (normally closed) in Regula Combi, so the controller will immediately change to Occupied if no presence sensor is connected or if the presence sensor indicates occupancy.

Display handling and indications

Regula Combi has an Occupancy button, as well as an INCREASE button and a DECREASE button to increase and decrease the set point.

Example:
The control setpoint is 22°C and the added displacement is +1.5°C. This means that the value 23.5°C will be shown in the display. "HEAT" or "COOL" will flash depending on which of the setpoint values is the control setpoint when you enter the set point menu, i.e. depending on which set point you are changing. The displacement is added to both the heating and cooling set point.

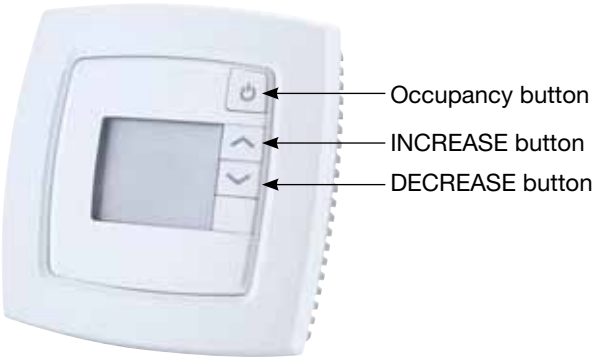

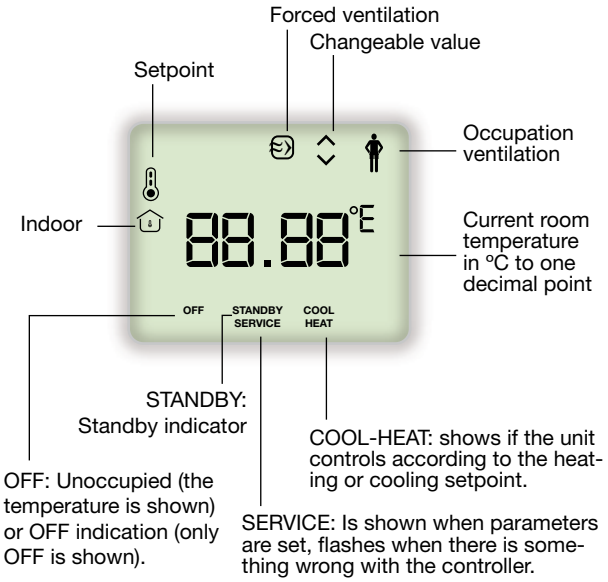

We reserve the right to make changes

Regula

Parameter menu

It is possible to set different parameter values in the parameter menu. The parameter menu is accessed by simultaneously holding the INCREASE and DECREASE buttons depressed for about 5 seconds and then pressing the INCREASE button twice. The Service indication will be displayed. First the display will show the parameter number 0 (which chooses program). Scroll between parameters by using the INCREASE and DECREASE buttons. Press the Occupancy button to select the desired parameter. The parameter number will be replaced by the parameter value. The value can be changed using the INCREASE and DECREASE buttons. If a button is held depressed the value will start scrolling, first slowly and then with increasing speed in 3 – 4 steps with 2 – 3 seconds between steps.

To retrieve the original value, i.e. the value before change, press the INCREAS and DECREASE buttons at the same time. The original value is shown on the display.

To acknowledge and store a set parameter value, press the Occupancy button again, the display then returns to showing the parameter number.

After a certain time, about 1 minute, or when the INCREASE and DECREASE buttons are pressed at the same time while in the menu, the display returns to the normal view. Exit is shown on the display after the last parameter. The parameter menu is exited by pressing the Occupancy button while in Exit. Pressing INCREASE goes to the first parameter and pressing DECREASE goes to the last parameter. In the Parameter list the numbers of selectable parameters will vary depending on which program is activated. The defaults for Program 1 Water is shown, though parameters 9, 10 and 36 is only selectable if program 4 Change Over sensor is active and parameters 11, 48 and 49 is only selectable if program 2 VAV is active. Parameter 36 is only active in program 3.

Parameter number	Description	Default
0	Regula Combi Programs: 0=Regin Regio Midi RC-CDOC, 1=Water, 2=VAV, 3=eHybrid, 4=Change Over digital, 5=Change Over sensor	1
1	Basic heating setpoint	21°C
2	Basic cooling setpoint	22°C
3	Neutral zone at Stand-by, Heating sp=Basic sp heating-2, Cooling sp=Basic sp cooling+2	2°C
7	P-band for room controller	10°C
8	I-time (s) for room controller	300 s
9	With a lower temperature on the analogue change-over input, the cooling function is selected	-3
10	With a higher temperature on the analogue change-over input, the heating function is selected	+4
11	Control states: 4=Heating/Cooling with VAV-control and forced supply air, 5=Heating/Cooling with VAV-control	
12	Time in Bypass mode	45 min
13	Disconnect timer with occupancy/unoccupancy	30 min
20	State function of signal on UO1: 0=None, 1=Thermal actuator heat, 2=None, 3=Heating actuator 0...10V, 4=None	1 (VAV:3)
21	State function of signal on UO2: 0=None, 1=None, 2=Thermal actuator cooling, 3=None, 4=Cooling actuator 0…10V	2 (VAV:4)
22	State function of signal on UO3: 0=None, 1=Forced vent. digital, 2=None, 3=None, 4=Cooling actuator 0…10V	4 (VAV:1)
36	Time in hours between exercise of heating actuator	23 (COS:3)
42	Select if setpoint or actual value is to be shown in display, 0=Actual, 1=Heating setpoint, 2=Cooling setpoint, 3=Average value of heating and cooling setpoint, 4=Only setpoint displacement, 5=CO2 concentration in the room in ppm (RC-CDOC)	0
43	Highest permitted setpoint offset upwards	3°C
44	Highest permitted setpoint offset downwards	3°C
48	Min flow at cooling output when control state Heat/cool with VAV-control is selected	20
49	Max flow at cooling output when control state Heat/cool with VAV-control is selected and heating is applied	0
74	Setpoint display at setpoint adjustment:0=The offset is shown in the display, 1=The active setpoint + offset are shown in the display. HEAT or COOL is shown depending on whether the unit controls according to the heating or cooling setpoint when you enter the menu, 2=The heating setpoint + offset are shown in the display, 3=The cooling setpoint + offset are shown in the display.	1
112	Min. limit for the VAV damper when using CO2 control (RC-CDOC)	800
113	Max. limit for the VAV damper when using CO2 control (RC-CDOC)	1000

Regula

All the Regio Midi parameters (with Regin defaults) can be accessed by selecting the value 0 at parameter 0.

Furthermore all parameters can be accessed and changed via RegioTool or Modbus/EXOLine communication.

CO2 Sequence

A CO2 sensor (CO_2RT) can be used as input for Regula Combi. The signal from the CO2 sensor to the Regula Combi is 0-10 V corresponding to 0-2000 ppm. In the Regula Combi a lower and upper limit of CO2 is set (default 800 and 1000 ppm). These limits will affect the output signal (UO2 or UO3) from Regula Combi. The CO2 limits are adjustable (parameter 112 and 113).

Output signal actuator/signal from CO_2 sensor

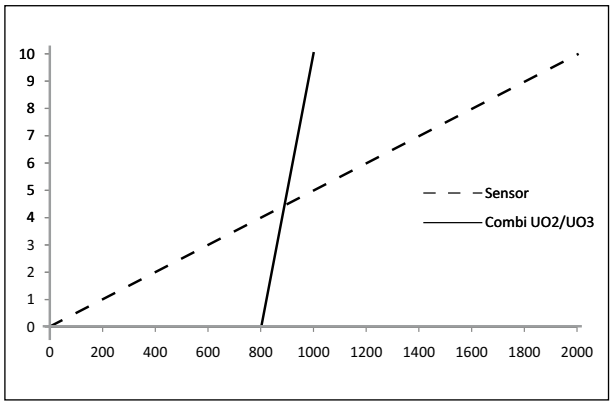

Occupancy button

When pressing the occupancy button for less than 5 sec, the controller is set to forced ventilation (Bypass). If the button is pressed again when forced ventilation is active, the controller will go to the default operating mode (Standby). Though if there is signal of presence from an occupancy detector or if no occupancy detector is connected the controller will go to operating mode occupancy shortly after.

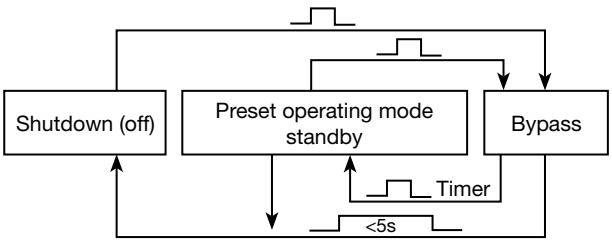

When the Occupancy button is held depressed for more than 5 seconds, the controller changes operating mode to Off, regardless of the current operating mode.

If you press the Occupancy button for less than 5 seconds when the controller is in operating mode Off or the preset operating mode, the controller changes to operating mode Bypass. If you press the button for less than 5 seconds when the controller is in Bypass, it changes operating mode to the Preset operating mode (Standby).

After a configurable time in Bypass (default 45 min), the controller returns to the preset operating mode (Standby).

Occupancy detector

For local control of the operating mode between the preset operating mode (Standby) and Occupied, an occupancy detector can be connected.

When occupancy is indicated, the controller changes operating mode to Occupied.

In Occupied on presence, there is a switch-off timer, which means that if there is no occupancy indication during this time (default 30 min), the controller will return to the preset operating mode (Standby).

The off-delay must be at least 1 min

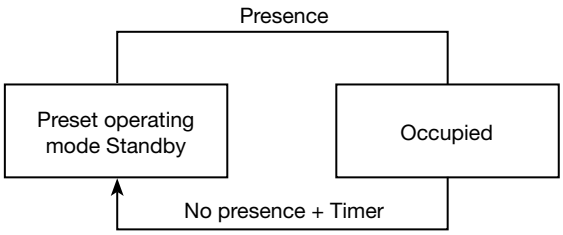

Condensation detector

There is a special input (CI) on the Regual Combi controller. This input is intended for the Regula Secura sensor, and functions internally as a digital input, i.e. condensation or no condensation.

When the condensation detector is activated, the cooling control is blocked and the controller is set in neutral position. When condensation ceases, the controller will start controlling from the neutral position.

Lindab recommends using the condensation input only when the Regula Combi unit is integrated into the beam and thereby only one cooling actuator is controlled by the Regula Combi.

If the Regula Combi unit is placed on the wall Lindab recommends using the Regula Secura instead that not involves the special input (CI) on the Regula Combi.

We reserve the right to make changes

Regula

Electrical wiring diagrams

Regula Mono - Duo

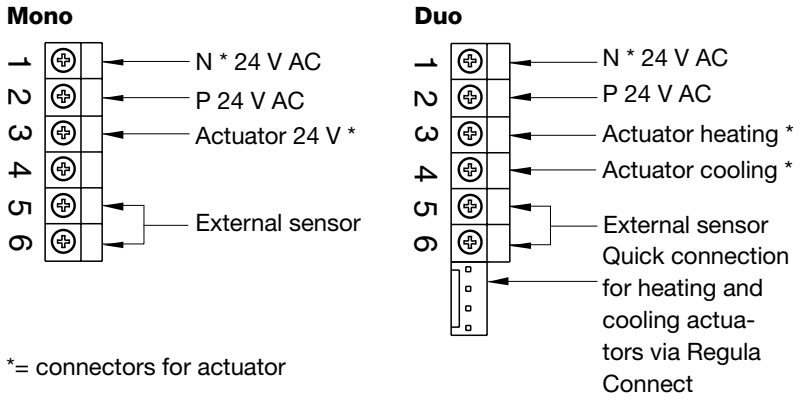

Circuit diagrams Regula Combi

The maximum number of actuators that can be connected to the digital output (ON/OFF) is 10 for cooling and heating, respectively. When more than 4 actuators for cooling or heating are connected, terminal blocks 10 and 20 must be connected with a cable.

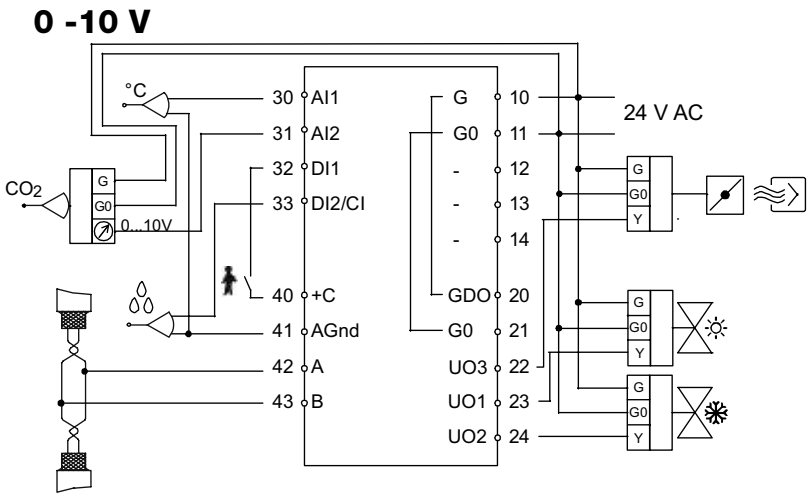

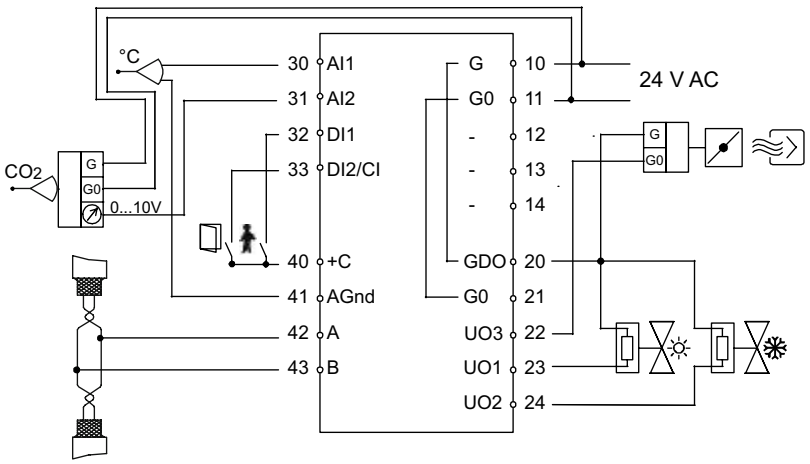

Regula

Electrical wiring diagrams

Regula Combi

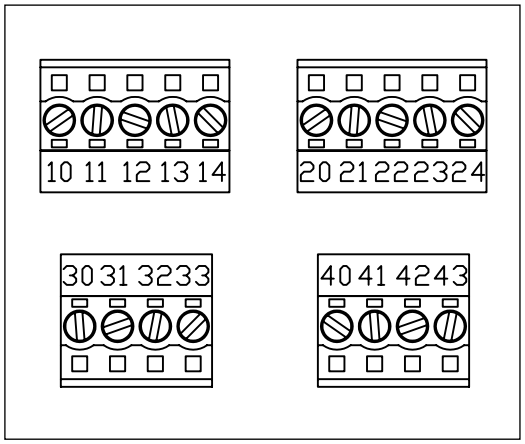

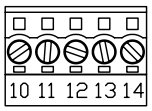	**10** G Supply voltage 24 V AC **11** G0 Supply voltage 0 V **12-14** No function.
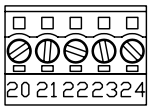	**20** GDO 24 V AC out common for DO. Internally connected to terminal 10, G. **21** G0 0 V common for UO. Internally connected to terminal 11, G0. **22** UO3 Control output forcing (cooling). For a 0...10 V DC actuator, max 5 mA. The actuator's 0…10 V control signal terminal is connected to terminal 22 and its supply terminals to terminals 20 and 21. Make sure that the reference pole G0 is connected to the correct terminal on the actuator. Alternative For a 24 V AC thermal actuator, max 2.0 A. The thermal actuator is connected between terminals 22 and 20, GDO. **23** UO1 Control output heating. For a 0...10 V DC actuator, max 5 mA. The actuator's 0…10 V control signal terminal is connected to terminal 23 and its supply terminals to terminals 20 and 21. Make sure that the reference pole G0 is connected to the correct terminal on the actuator. Alternative For a 24 V AC thermal actuator, max 2.0 A. The thermal actuator is connected between terminals 23 and 20, GDO. **24** UO2 Control output cooling. For a 0...10 V DC actuator, max 5 mA. The actuator's 0…10 V control signal terminal is connected to terminal 24 and its supply terminals to terminals 20 and 21. Make sure that the reference pole G0 is connected to the correct terminal on the actuator. Alternative For a 24 V AC thermal actuator, max 2.0 A. The thermal actuator is connected between terminals 24 and 20, GDO.
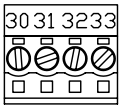	**30** AI1 For temperature sensor, PT1000. Measuring range 0...50°C. The sensor is connected between terminals 30 and 41, AGnd. **31** AI2 For a 0…10 V CO2 sensor **32** DI1 Presence sensor. A potential-free contact is connected between terminals 32 and 40, +C. Open contact corresponds to occupancy. **33** DI2/CI Condensation detector. The sensor is connected between terminals 33 and 41, AGnd.
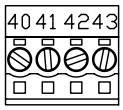	**40** +C 24 V DC out common for DI **41** AGnd Analogue ground, reference for AI **42** A RS485-communication A **43** B RS485-communication B

We reserve the right to make changes

Regula

Technical data

Model	Regula Mono	Regula Duo	Regula Combi
Supply voltage	24 V AC ±15%	24 V AC ±15%	18. . . 30 V AC, 50... 60 Hz
Communication	No	No	RS485, EXOline or Modbus. 8 data bits, even parity, 1 or 2 stop bit. 9600 bps.
Outputs	1	2	3 UO (either AO or pulsating DO) heating, cooling and forcing (cooling)
Inputs	1 temperature sensor	1 temperature sensor	2 AI for temperature and CO_2 DI for occupancy and condensation
Installation	In equipment box or surface mounted	In equipment box or surface mounted	In equipment box or surface mounted.
Analog Output signal			0-10 V, max 5 mA.
Digital Output signal	24 V / 2 A on-off*	24 V / 2 A on-off*	24 V, max 2.0 A (time proportional pulse output signal) **
Temperature range	11-29 °C	11-29 °C	5-40 °C
Temperature setpoint	21 °C (adjustable 15-25 °C)	21 °C (adjustable 15-25 °C)	Heating 21, Cooling 22 ± 3°C ***
Dead zone	1 °C	1 °C	1 °C (set by h/c setpoints)
Power consumption	1 W	1 W	2.5 VA
Electrical connection	Screw-in plinth	Screw-in plinth or quick connection	Screw-in plinth
Size, controller	85 × 85 × 35 mm	85 × 85 × 35 mm	95 × 95 × 31 mm
Casing	ABS, white color	ABS, white color	Polycarbonate, RAL 9010
Protection class	IP 20	IP 20	IP 20
Certification	CE	CE	CE
Ambient temperature	0…50 °C	0…50 °C	0…50 °C
Storage temperature	-20. . 70 °C	-20. . 70 °C	-20. . 70 °C
Ambient humidity	Max 90 % RH	Max 90 % RH	Max 90 % RH
Actuator exercise	No	No	Yes. 5 min once every 23 hours
Indication, heating	Red LED	Red LED	”Heat” in display
Indication, cooling	Blue LED	Blue LED	”Cool” in display
Adjustment of desired valve	±4 °C using the control knob	±4 °C using the control knob	±3 °C (adjustable)

* Max 10 actuators for heating or cooling stages.
** Max 10 actuators for heating or cooling stages. When more than 4 actuators for cooling or heating are connected, terminal blocks 10 and 20 must be connected with a cable.
*** Basic heating setpoint 5...40 °C, Basic cooling setpoint 5...50°C, Setpoint displacement +/-0...10°C

Regula

Regula Secura

Security against condensation
Lindab has developed a condensation guard for both chilled beams and facade systems. The condensation guard is called Regula Secura. Since the control exercised by Regula Secura is based on actual condensation, a greater effect is obtained than with conventional humidity control. Conventional humidity control usually measures the mean humidity and sets aside a safety margin for the water temperature, to avoid condensation. With Regula Secura, no margins are required for either the sensor settings or the thermal resistance in the piping.

When condensation is formed on the supply pipes, the cooling valve temporarily shuts down the water flow through the affected product. The protection provided by Regula Secura is separate for each individual chilled beam or façade system. This prevents damp damage caused by condensation. The condensation guard continues to regulate the effect even below the dew point, so the performance of the chilled beam or the façade system is kept to the optimum. An example of a control sequence is shown in the diagram below.

The use of Regula Secura on all beams and façade systems increases the protection against condensation for each individual product. This means that only units where condensation forms will be shut down until the condensation dries out, while all other units will continue working. This is particularly beneficial for room environments with variable climatic conditions, or where there is a risk of external moisture entering the room, for example through open windows.

Function
Regula Secura exercises control through the output signal to the actuator and is only active when there is a signal to the actuator to open the valve. When the control signal does not ask for cooling, there is no need to activate Regula Secura. Regula Secura has a sensor mounted on the supply pipe of the beam or the façade system. When the sensor indicates that condensation has formed on the supply pipe, Regula Secura closes the valve until the condensation has dried out.

Regula Secura is compatible with electronic control devices such as Regula Combi or any other equipment with thermoelectric actuators. It is important to note that the valve and the actuator need to be closed in the event of a power cut.

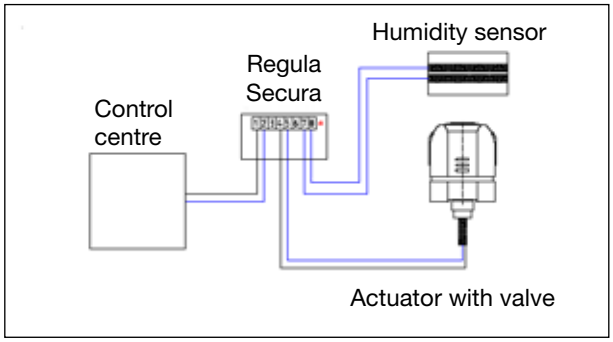

Schematic showing how to connect Regula Secura.

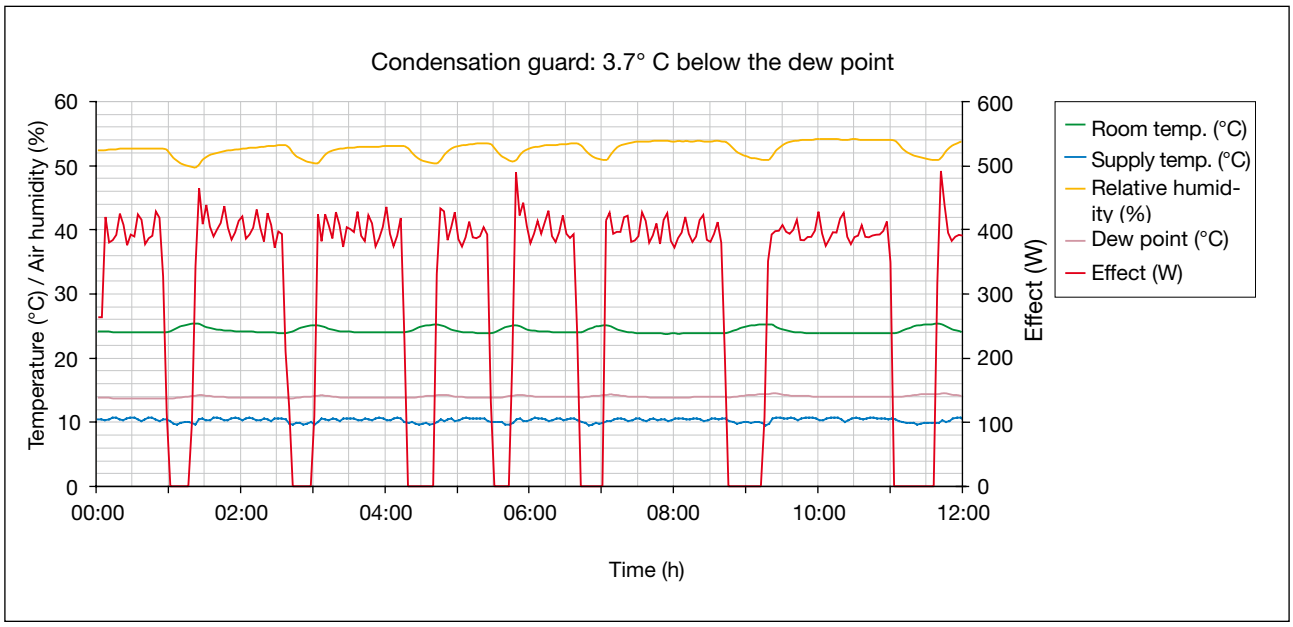

The diagram shows a control sequence where the water temperature is 3.7° C below the dew point. Throughout the whole process, the control centre asks for cooling. It can be seen how Regula Secura controls using the ON/OFF feature.

We reserve the right to make changes

Regula

Regula Connect

Regula Connect is a connection card that provides flexible connection for chilled beams or façade systems. Regula Connect consists of a connection card with connectors for mains cables, thermostat cables and terminal blocks for actuator cables. The card has alternatives for the mains cable outputs, so the control signal can be transmitted to the next chilled beam or facade system in both directions or terminated at a wall. A transformer is also connected to a free port.

The system consists of a device cable, extension cable and thermostat cable.

Reconnecting control cables
When moving, building new, or removing existing partitions, the control system can be reconnected (see picture below). This to allow the control centre to control the products in the room where it is installed.

The unit's cable consists of four conductors, two for the supply voltage and two for the control signal to the heating and cooling actuators.

The figures refer to the picture below.

1-2 Connectors for connection and relaying within the same control zone (supply voltage and control signals).
3-4 Connectors for connection and relaying to another control zone (supply voltage only).
5 Connector for connection of room thermostat (monitoring of control zone).
6 Terminal block for the connection of actuators. Heating and cooling.

Actuators and valves
1. The thermoelectric actuators are designed for either digital (24 V ON/OFF) or analogue control (0-10 V).
2. By standard, NO type control valves are used, i.e. heat valves, which are normally open together with NC actuators.

Adaptation to different valves
The control equipment is based on the use of normally open valves (heat valves) for control of both the cooling and heating. The actuators are suitable for most valves available on the market. Specify in the programme text the valves for which the actuators should be adapted.

Normally open or closed actuators
Regula can control normally open (NO) or normally closed (NC) actuators. On delivery, Regula is set for NC type actuators. There is a change-over switch for NC or NO type actuators under the lid.

If the Regula Secura condensation guard is to be used, then a combination of a control centre, actuators and valves should be selected so that the valve closes when the power to the actuator is cut.

Number of actuators per control centre
Up to 10 actuators can be connected per output (cooling or heating) and control centre. When several actuators are connected, a connection box should be used to save space.

Miscellaneous
- There is an indicator on the actuator that shows if the valve is open or closed.
- The actuator is delivered locked with a "first-time" function in an open position. On starting-up, when voltage is fed to the actuator for the first time (min. 6 minutes), this function is cancelled. The actuator is then ready for use. This facilitates filling-up and venting of the cooling system.
- The actuators are supplied with a 1 m halogen-free cable.

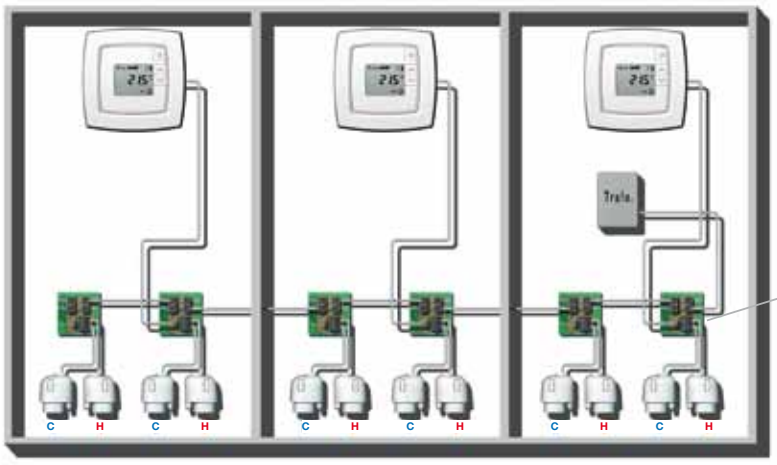

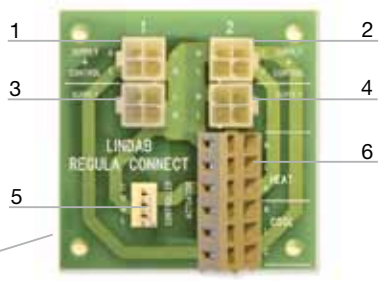

Regula

Technical data, actuators & valves

Lindab's standard actuators are of the type 24V NC (normally closed).

Supply voltage:	24V AC/DC
Power consumption:	75 m A, initially max. 250 mA
Effect, operation:	1.8 W
Opening and closing time:	approx. 3 min
Actuating power:	100 N +/- 5%
Cylinder stroke:	approx. 4 mm
Ambient temperature:	0…60 °C
Protection class:	IP 54
Weight:	73 g without adapter

Lindab's standard valves are 2-way FV valves.

Fluid temperature:	2…90 °C
Kvs	1.2
Kvs value (fully open valve):	0.01-1.2 (FV 10, 15, 20)
Pressure class:	PN10
Max. differential pressure:	25 kPa
Max. closing pressure:	250 kPa
Cylinder stroke:	1.7 mm
Material:	Brass
Recommended pressure drop over valve	8-10 kPa

Please contact Lindab for more information, if other types of actuators and valves are required.

Pressure drop diagram for FV valve

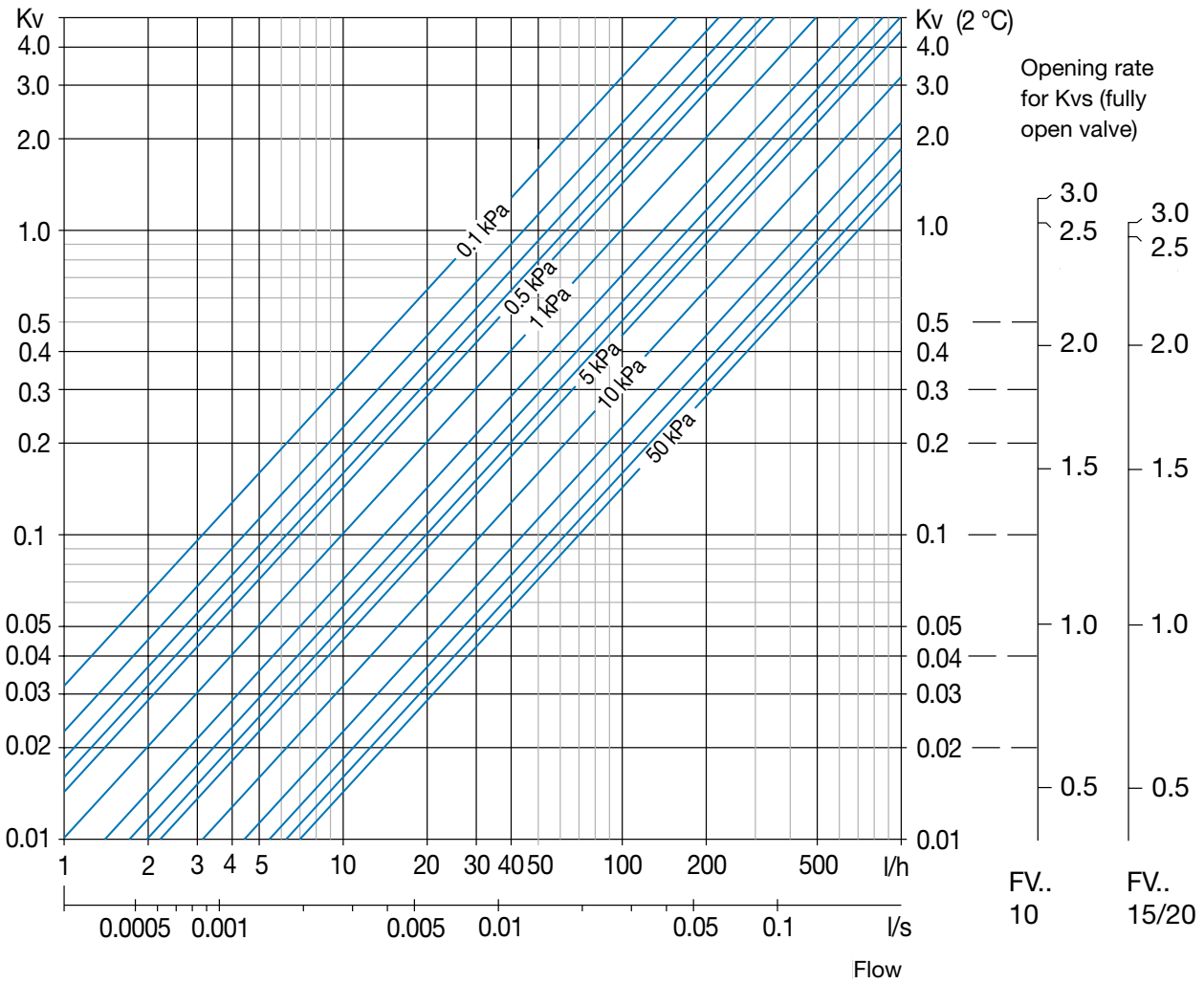

We reserve the right to make changes

Regula

Other accessories

CO2 sensor CO2 RT

Supply voltage:	24 V AC +/- 15 %
Power consumption:	3 W
Protection class:	IP30
CO2:	0...2,000 ppm
Temperature:	0...50° C

Outputs

CO2:	0..0.10 V DC refers to 0...2,000 ppm
Temperature:	0...10 V DC refers to 0...50° C

CO2 relay sensor CO2 RT-R
Same as above, but with a relay instead of a modulating output signal. Coupling difference and level can be installed.

Calculation of the transformer size

Prerequisites

- The size of the transformer is calculated with regard to greatest number of heating or cooling actuators in the building or the zone.
- Consumption is 6 W on opening and 1.8 W in continuous operation. The calculation needs to take into consideration whether the total power consumption is higher/lower on opening or in continuous operation.

Example:
15 cooling actuators and 25 heating actuators are installed in the building/zone. Number of heating actuators dimensioned: 25.

Consumption at start-up will then be 6 W x 25 actuators and 1.8 W x 25 actuators in continuous operation.
With the formula P = U x I, we calculate, as follows:

6 W/24 V = 0.25 A per actuator

25 x 0.25 A = 6.25 A

The transformer size is then = 6.25 A x 24 V = 150 VA

Remember that, for example, if NO actuators are used for heating and NC actuators for cooling, all actuators need to be added together.

Presence sensor IR24-P

Supply voltage:	24 V AC +/- 2 V
Power consumption:	5 m A
Monitoring area:	15 x 15 m at 25° C
Installation height:	1.8...3.6 m
Detectable movement:	0,1...0.3 m/s

Outputs

Output relay:	24 V AC/DC, 0.2 A max

External temperature sensor R5/PT1000

Protection class:	IP30
Sensor element:	Linear NTC sensor. Accuracy better than +/- 1° C
Colour:	Lid: Polar white, RAL 9010 Bottom part: Dark grey

Besides, there is also a strap-on sensor, immersion sensor and duct sensor. Please contact Lindab for additional information.

Miscellaneous

Designations

Product designation:	Regula
Type:	Mono, Combis, Connect or Secura

Programme text

Lindab control equipment	**Qty**
Regula Combi	20
CO2 sensor (RT, RT-R)	4
Presence sensor	4
Regula Secura	30
Regula Connect	5
Cooling actuator, 24 V NC	30
Heating actuator, 24 V NC	30
2-way valve FVR-15	60
Transformer 150 VA	1

Condensation protection Drypac™

Contact, Overview, Index	1
Ceiling Heating/Chilled	2
Plexus	3
Professor	4
Pilot	5
Architect	6
Polaris I & S	7
Plafond	8
Podium	9
Celo	10
Cabinett	11
Capella	12
Carat	13
Fasadium	14
Atrium H & C /Loggia	15
Regula	16
Drypac™	17
Lighting	18
TEKNOsim	19

© 03.2009 Lindab Ventilation A/S. All forms of reproduction without written permission are forbidden. Lindab® is the registered trademark of Lindab AB.
Lindab's products, systems, product and product group designations are protected by intellectual property rights (IPR).

Condensation protection Drypac™

Function

For effective condensation protection.

Use

Where you need a high level of security against condensation drips. In rooms where the humidity is below the dew point or where you wish to increase the available cooling capacity.

Application

Most types of finned beams.

Worth noting

Drypac is a well-known inorganic material, which reduces the risk of condensation formation and organic fouling.

It can be used continuously at a temperature of 4° C below the dew point.

In smaller installations, the cooling water can be taken directly from the primary side of the coolant.

Drypac allows you to increase the temperature difference in the coolant, thus offering the option for smaller pumps and piping.

Condensation protection Drypac™

Function

When the cooling water temperature in a finned battery falls below the dew point, the air's water vapour condenses on the cooling water pipes and the fin surfaces closest to the pipes. The condensed water is lead, due to hygroscopy, through the Drypac™ layer to the warmer surfaces in the periphery of the fins. There, the water evaporates into the passing air. This transport takes place continuously, without condensation dripping, down to a max. of 4° C below the dew point. It is the temperature difference between the colder water pipe and the warmest part of the fins that determines how far below the dew point transport can take place continuously.

These properties are determined by the design of the cooling battery and can vary between the different products. When the cooling water temperature is lower than 4° C below the dew point, part of the condensation water accumulates in the hygroscopic layer. In the end, however, a point is reached when it cannot absorb any more water. The chilled surfaces will work for 3 to 4 hours without dripping at 6° C below the dew point and for approx. one hour at temperatures as low as 8° C below the dew point.

In addition to the higher effect, which is achieved when the cooling water can have lower temperatures than with conventional products, there is an additional increase in effect of approx. 25 % when the product is used in the "wet" range, i.e. below the dew point. In the dry range, Drypac™ has a reducing effect on the cooling effect. To see how a specific product works together with Drypac™, please refer to the brochure for the respective product.

Design

Drypac™ consists of an inorganic hygroscopic material, Perlite (a vulcanised stone material), and a binding agent. Under normal operating conditions, the cooling radiator will only work in the wet range during hot and humid periods during the summer and early autumn. This is usually a period of 2 to 4 weeks per year. The operating time for the radiator, (i.e. operation in the wet range) will normally be from morning to late afternoon. During the rest of the day, there is less or no need for cooling, and the surface will dry out.

Hygiene

The material used in Drypac™ is fully inorganic, which guarantees no mould or bacterial growth. The damp period stops every day, when the surfaces dry out, and further only occur for a short period during the year.

It is used in house construction (Leca blocks) and it has been coated on the internal surfaces of sheet metal roofs since the 1960s to prevent condensation; it is also applied to protect ducts in ventilation systems from condensation as well as cooling pipes, etc.

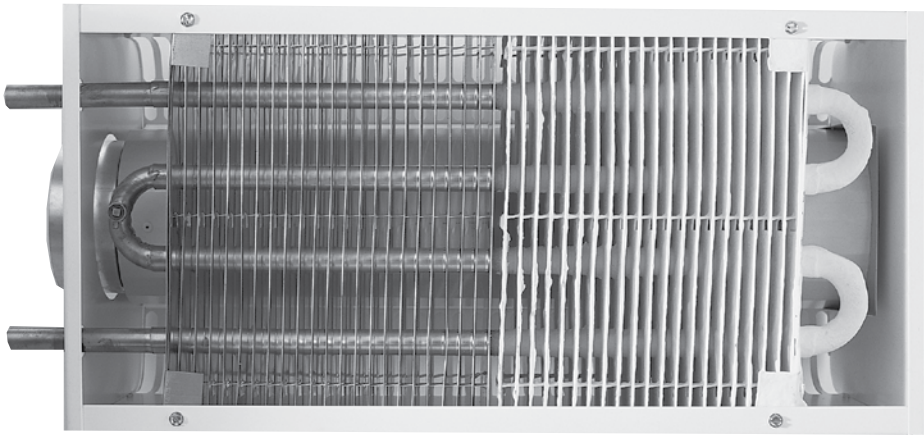

Drypac™ is applied on the right-hand side of the finned battery.

We reserve the right to make changes

Condensation protection Drypac™

Application areas for Drypac™

Drypac™ is suitable for use in many types of installations. These can be divided into the following categories:

- Increased cooling effect and/or smaller chilled ceiling surface, by reducing the coolant temperature.
- Increased security against condensation drips in sensitive environments.
- Simplified control systems, in smaller installations.
- Smaller piping systems, in larger installations.
- In installations with ground water cooling.

These possibilities can be combined, however, not necessarily in full for each function.

Dimensioning

1. Increased cooling effect: The coolant supply temperature is dimensioned to 4° C below the dew point. This gives the maximum increase in effect.

2. Higher security: The coolant supply temperature is lowered by 1 to 2° C below the dew point, thus providing a very high level of security against condensation drips. (see diagram 1).

3. Simplified control system: In smaller installations, the coolant system can be connected directly to the primary side of the cooler. Suitable temperatures can then be 16° C for starting and 10° C for stopping of the cooler. The chilled ceilings are dimensioned for a mean water temperature of 13° C.

If the cooling effect of the cooler matches the cooling need with a dry chilled ceiling, no further actions are required since the cooling effect of the chilled ceiling is approx. 25% higher in the wet range.

At outdoor temperatures and humidity levels above or below dimensioning, the cooler will provide higher water temperatures and thus compensate accordingly in these extreme cases.

Where the cooler has excess capacity, absolute air control is required to increase start /stop temperatures (see fig. 1).

4. Smaller piping systems in larger installations: In large installations, it can be beneficial to increase the temperature difference between the coolant's supply and return temperature, from the standard 3 or 4° C to perhaps 5 or 7° C. The cooling capacity will then be reduced a little, but this is most often compensated by significantly lower costs for the piping system.

5. In installations with ground water cooling: Chilled beams/chilled ceilings with Drypac™ are very suitable for connecting to ground water cooling, as the low supply temperature can then be better utilised, thereby reducing ground water usage. (see fig. 2).

Planning the coolant system

The piping system is laid using steel, copper and plastic pipes.

The supply pipes and all pipes in shafts should always be insulated over their entire length.

The insulation is usually done with fully-glued foam rubber tubing. Control valves and "naked" parts of connection pipes, between cooling coils and corridor branches, can be suitably insulated with spirally-wound foam rubber tape, which is later painted over with Drypac™.

Return pipes can be left without insulation, if the outdoor temperature is deemed to exceed the dew point - which will be the case where the temperature difference, between the supply and return coolant, is selected to be 4 or 5° C. This also presupposes that room control is performed with 2-way valves, that pressure difference control is placed at the beginning of the branch and that the system is not equipped with bleeder valves, i.e. that the cold supply water does not circulate directly back into the return pipe.

Condensation protection Drypac™

Dimensioning

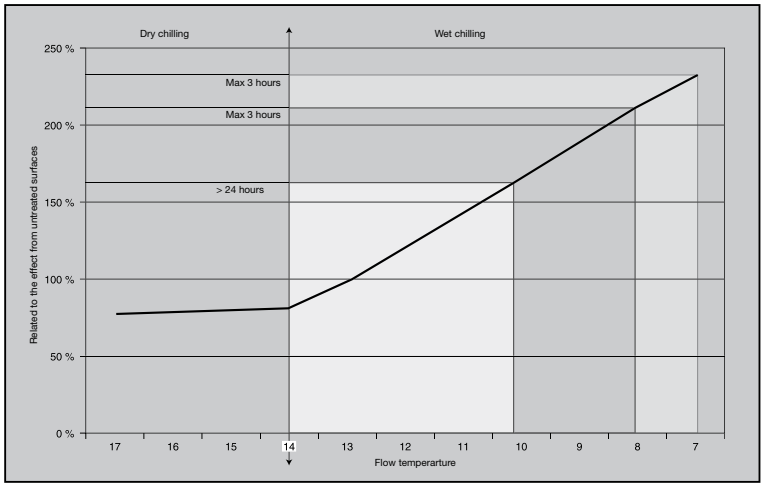

Diagram 1. Drypac™ increase in effect compared to untreated surface. Room temperature: +25° C. Rh: 55 %.

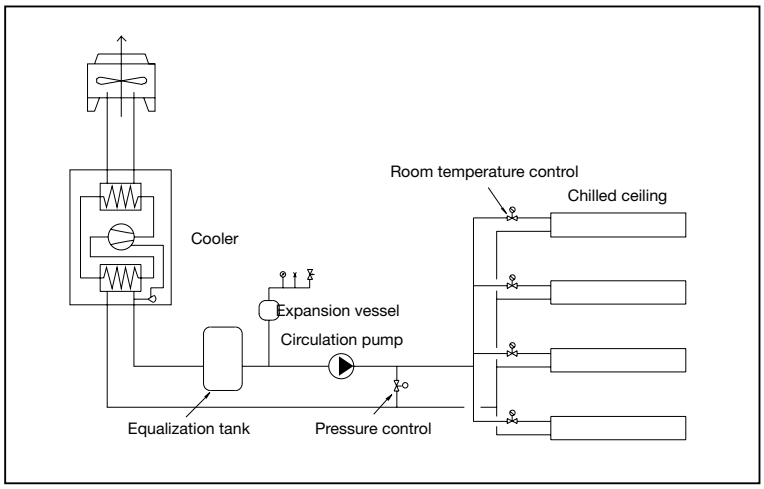

Figure 1. Flow chart, chilled ceiling connected to cooler's primary side.

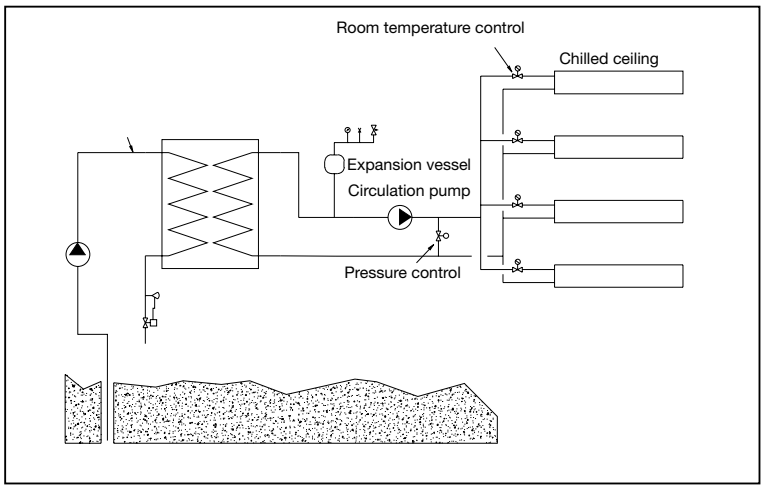

Figure 2. Flow chart, chilled ceiling with ground water cooling.

We reserve the right to make changes

Lighting

Contact, Overview, Index	1
Guideline heating and cooling	2
Plexus	3
Professor	4
Pilot	5
Architect	6
Polaris I & S	7
Plafond	8
Podium	9
Celo	10
Cabinett	11
Capella	12
Carat	13
Fasadium	14
Atrium H & C /Loggia	15
Regula	16
Drypac™	17
Lighting	**18**
TEKNOsim	19

© 02.2010 Lindab Ventilation A/S. All forms of reproduction without written permission are forbidden. Lindab® is the registered trademark of Lindab AB.
Lindab's products, systems, product and product group designations are protected by intellectual property rights (IPR).

Lighting

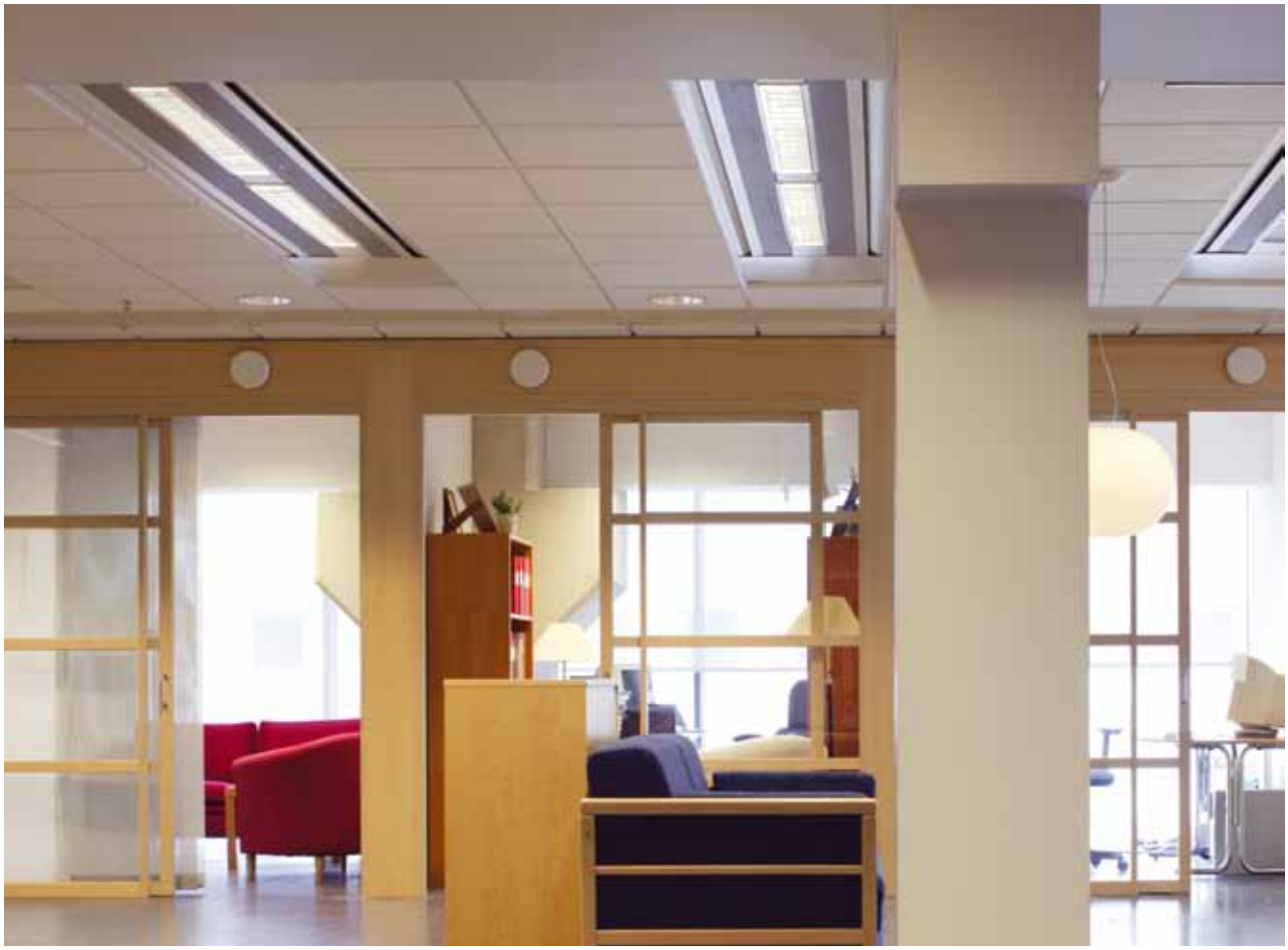

Lighting for chilled beams

Use

Lindab can offer lighting for 'Professor I-60' and Architect Moon.

Professor I-60 and Architect Moon can be fitted with direct lighting.

Installation method

Professor I-60 is installed integrated into a suspended ceiling.

Architect Moon is installed either directly on to the ceiling or suspended from it.

Worth noting

All lighting data has been measured in tests by an accredited lighting institute. Lighting data is available in EULUMDAT format (.ldt). Please contact Lindab for more information. All light fittings are CE marked.

All electronic components are produced by reputable European companies. The glare shields are of the MIRO brand®.

The reflector systems fulfil the requirements in the European standard EN12464-1 for glare, light scattering, etc. All cabling is halogen-free.

Lighting

1
2
3
4
5
6
7
8
9
10
11
12
13
14
15
16
17
18
19

Lighting features

For many years, Lindab has offered productive indoor climates by supplying chilled beams with a number of different features. Apart from cooling, the chilled beams can be fitted with ventilation, heating, integrated control equipment, adjustment, Regula Secura (condensation guard), Drypac™ (condensation protection) and now even lighting.

Lighting is available for Professor I-60 and Architect Moon. Professor I-60 and Architect Moon can be fitted with direct lighting.

By providing the chilled beam with lighting, you gather the cooling and ventilation, and the lighting in the same unit. One advantage of fitting several functions in the chilled beam is more free-ceiling surface. This leads to easier coordination of installations and lower installation costs.

Professor I-60 with lighting

Professor I-60 for integrated installation in a suspended ceiling can be fitted with direct lighting. The Professor can be provided with either one or two single or double strip light fittings. Lighting is an option for beam lengths of 1.8 to 3.6 m. The length of the light fitting is 1.2 m. For more information about lighting power, refer to table 1 on the next page. The integrated lighting in Professor is a plus feature, which does not affect the cooling effect. If necessary, a clear light fitting (dummy) with the same appearance as an active chilled beam can be provided.

Versions and accessories

The glare shield is available in two versions, either in matt (Soft) or glossy material (Mirror). Soft is the standard glare shield supplied. The glare shield also works as a reflector. The lighting can be ordered with an HF device for light adjustment (dimmer).

A complete light fitting comprises a light source (T5 strip lights), a 3-pin quick-coupling connector, 2.5 m connecting cable 3×0.75 mm² and a earthed plug. All cabling is halogen-free as standard. A Wieland terminal system can be ordered as an accessory. The light fitting is fully integrated into the chilled beam.

Picture 1.

Picture 2.

We reserve the right to make changes

Lighting

Lighting power

Light fitting power (W)	Type of tube	Luminous flux (lm)	Light fitting, length (m)	Polar diagram
1×28	HE	2600	1.2	2 & 3
2×28	HE	5200	1.2	4 & 5
1×54	HO	4450	1.2	2 & 3
2×54	HO	8900	1.2	4 & 5

Table 1.

Number of light fittings in Professor I-60

Length	Number of fittings, 1.2 m
1.8	1
2.1	1
2.4	1
2.7	1
3.0	1, or, 2
3.3	1, or, 2
3.6	1, or, 2

Table 2. The table shows the number of light fittings that are suitable for the actual beam.

When two light fittings are fitted into one beam, the minimum distance between them is 100 mm.

Dimensions, mm

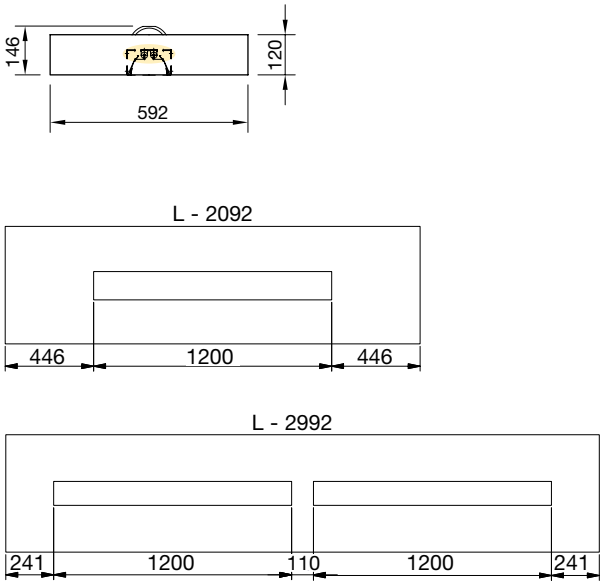

Figure 1.

For more information about connections and dimensions, refer to the relevant product chapter.

Lighting

Lighting selection

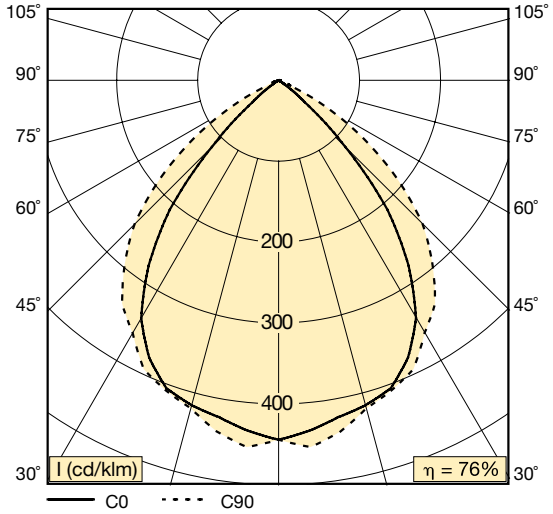

Figure 2. Polar diagram for single strip light fitting and Soft glare shield

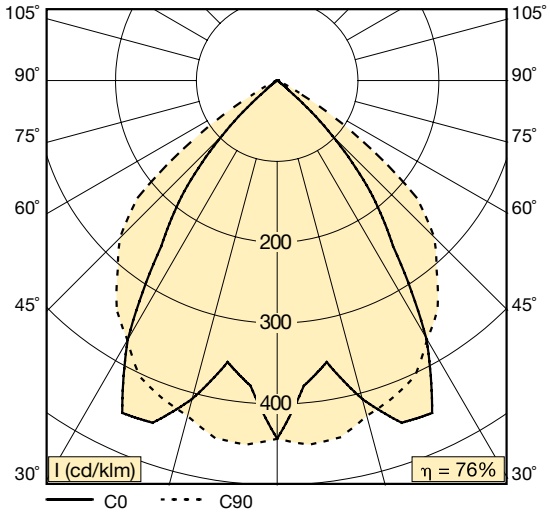

Figure 3. Polar diagram for single strip light fitting and Mirror glare shield

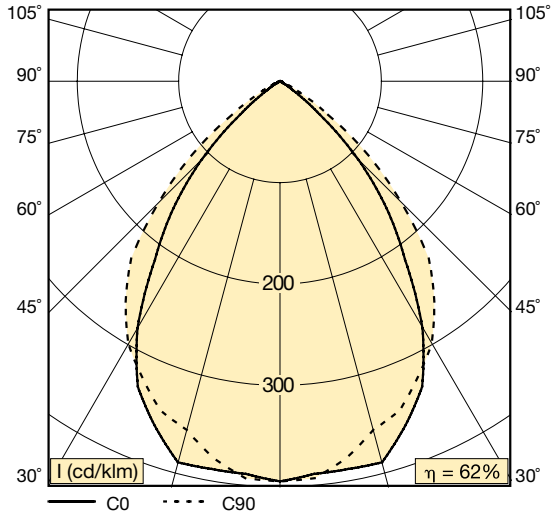

Figure 4. Polar diagram for double strip light fitting and Soft glare shield

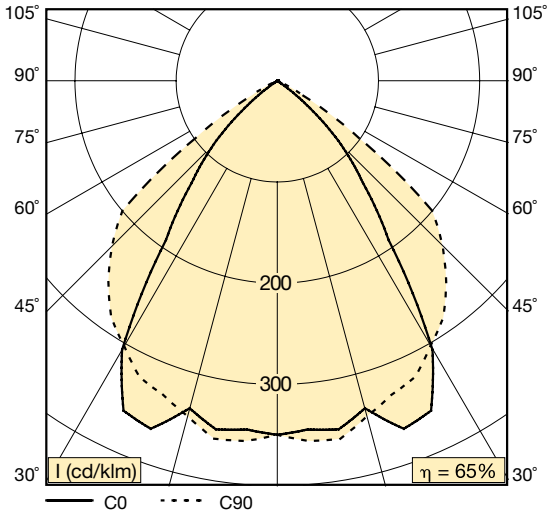

Figure 5. Polar diagram for double strip light fitting and Mirror glare shield

We reserve the right to make changes

Lighting

Architect Moon with lighting

Architect Moon is available with direct lighting. The lighting is provided by either one or two single or double strip lights, depending on the length of the beam. The available suitable beam lengths for this lighting feature are 1.5 to 3.6 m. The light fittings are 1.2 m long.

Versions and accessories

The lighting glare shield is available in two versions, either in matt (Soft) or glossy material (Mirror). Soft is the standard glare shield supplied. The glare shield also works as a reflector. The lighting can be ordered with an HF device for light adjustment (dimmer).

A complete light fitting comprises a light source (T5 strip lights), a 3-pin quick-coupling connector, 2.5 m connecting cable 3×0.75 mm² and a earthed plug. All cabling is halogen-free as standard. A Wieland terminal system can be ordered as an accessory.

Picture 3. Architect Moon with direct lighting.

Lighting

Lighting power

Light fitting power (W)	Type of tube	Luminous flux (lm)	Light fitting, length (m)	Polar diagram
1×28	HE	2600	1.2	6 & 7
2×28	HE	5200	1.2	8 & 9
1×54	HO	4450	1.2	6 & 7
2×54	HO	8900	1.2	8 & 9

Table 3.

Number of light fittings in Architect

Length	Number of fittings, 1.2 m
1.8	1
2.1	1
2.4	1
2.7	1
3.0	1, or, 2
3.3	1, or, 2
3.6	1, or, 2

Table 4. The table shows the number of light fittings that are suitable for the actual beam.

Dimensions, mm

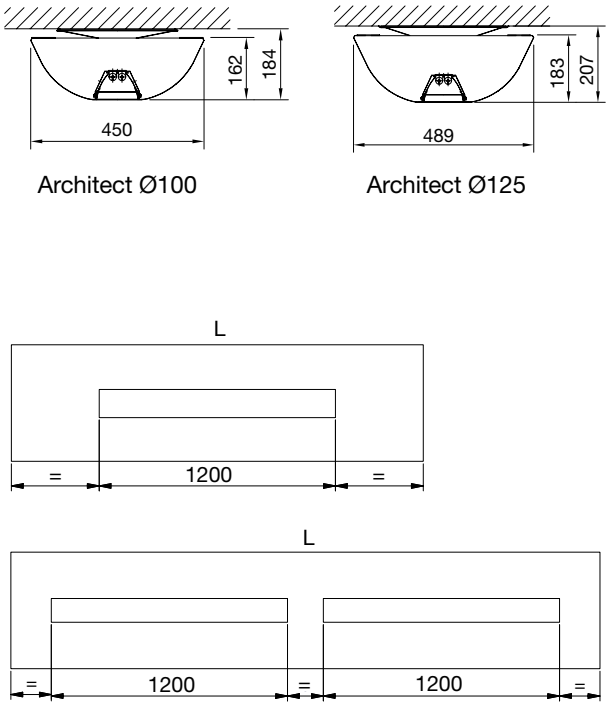

Figure 6.

For more information about connections and dimensions, refer to the relevant product chapter.

We reserve the right to make changes

Lighting

Lighting selection

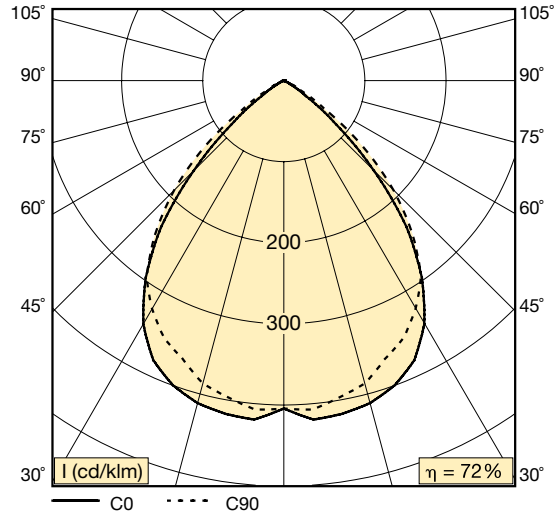

Figure 7. Polar diagram for single strip light fitting and Soft glare shield

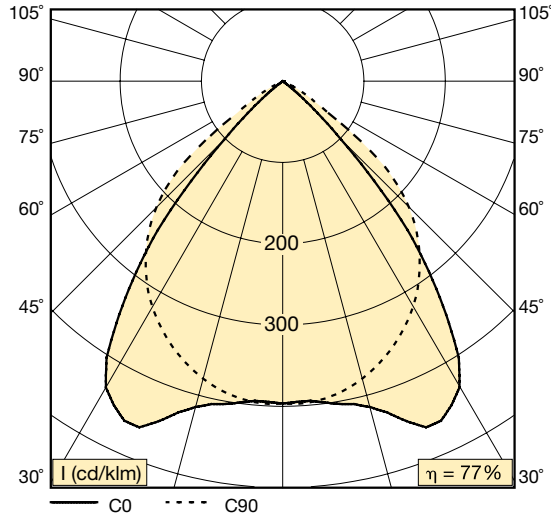

Figure 8. Polar diagram for single strip light fitting and Mirror glare shield

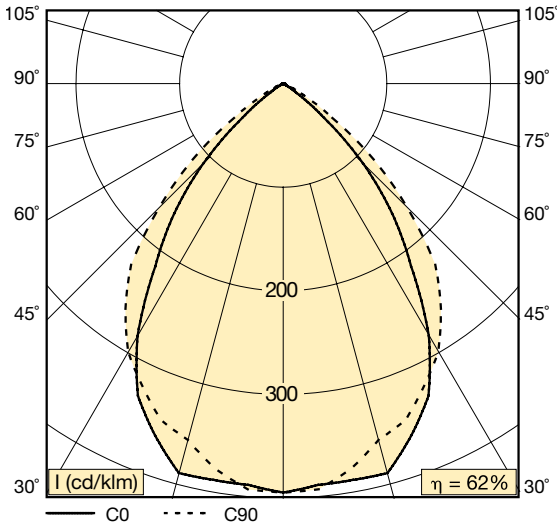

Figure 9. Polar diagram for double strip light fitting and Soft glare shield

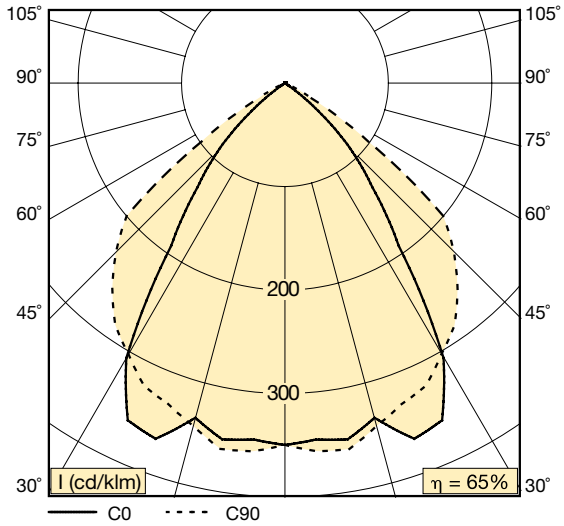

Figure 10. Polar diagram for double strip light fitting and Mirror glare shield

Lighting

1
2
3
4
5
6
7
8
9
10
11
12
13
14
15
16
17
18
19

Other

Equipment

Electrical connection: 2.5-m RKK 3 × 0.75 mm² connecting cable and earthed plug are supplied as part of the standard package.

Glare shield: The glare shield is available in two versions, see the relevant chapter. Soft is the standard glare shield supplied. The glare shield works as a reflector and it is earthed.

Light sources: T5 strip lights type HE are supplied with a complete installation. The strip lights have a diameter of 16 mm. The nominal values for the luminous flux (lm) are for an ambient temperature of 25° C. The HO (high output) type has a somewhat lower light yield (lm/W) and higher luminance (luminous intensity) than the HE (high efficiency) type.

Perforations: The standard perforation supplied for the product is Slot 50%. For other perforations, please contact Lindab.

Air connection: For suspended installation, the ventilation duct can be delivered coated.

Suspension: White plastic coating for the threaded rods can be supplied.

Covering plates: Covering plates for the laying of water pipes and ventilation ducts are available on request.

Light calculation

Lighting data is available in EULUMDAT format (.ldt). For light calculations, please contact Lindab.

Programme text

Supply air beams from Lindab	**Qty**
Product: Professor I 60 15-100-A1-3.6 m (refer also to chapter Professor)	40
+ 2 1.2-m light fittings, 2 x 39 W each + glare shield: Mirror	
Product: Architect Moon-15-100-A1- 3.0 m (refer also to chapter Architect)	40
+ 2 1.2-m light fittings, 1 × 54 W each + glare shield: Mirror + HF device for light adjustment.	

We reserve the right to make changes

TEKNOsim Climate simulation

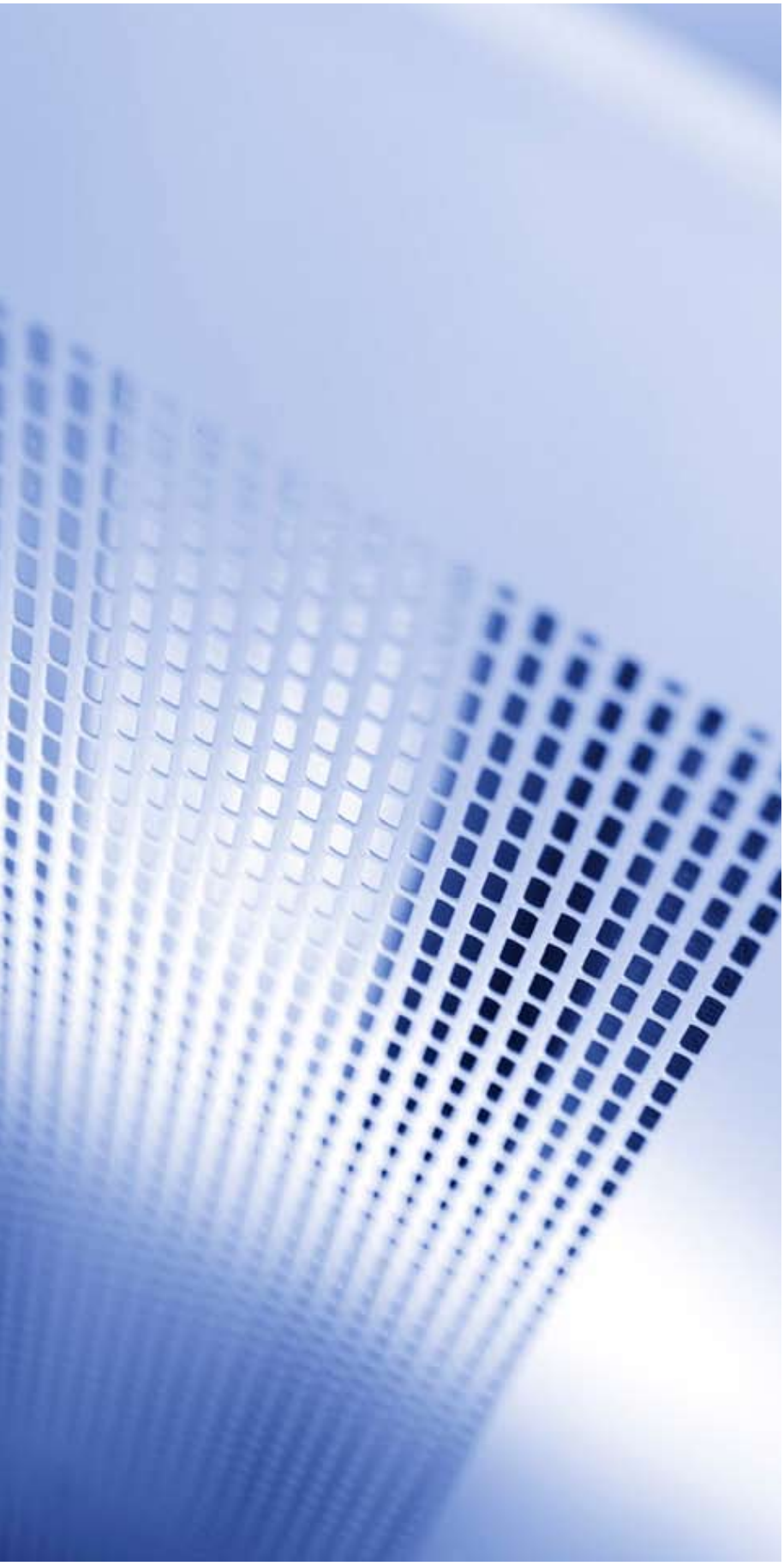

Contact, Overview, Index	1
Ceiling Heating/Chilled	2
Plexus	3
Professor	4
Pilot	5
Architect	6
Polaris I & S	7
Plafond	8
Podium	9
Celo	10
Cabinett	11
Capella	12
Carat	13
Fasadium	14
Atrium H & C /Loggia	15
Regula	16
DryPac™	17
Lighting	18
TEKNOsim	19

© 03.2009 Lindab Ventilation A/S. All forms of reproduction without written permission are forbidden. Lindab® is the registered trademark of Lindab AB. Lindab's products, systems, product and product group designations are protected by intellectual property rights (IPR).

TEKNOsim Climate simulation

Function

The recent and ongoing rapid developments in computer and calculation technologies have made it possible for us to study and modify a building or the functions in a room prior to its construction. This can save a lot of time and a significant amount of resources at all stages of a construction project. It is safe to say that computerised simulation is the modern crystal ball!

Calculations on the indoor climate of a given room are very complicated and in practice can only be achieved with the help of a computer. Since climate simulation software became available in the 1970s, we have also learned more about the degree of influence different factors have on the indoor climate of a room.

Understanding the significance of heat storage in a room with thick walls, ceiling or floor has made it possible to reduce the installed cooling effect compared to previously, while satisfying the requirements placed on the indoor climate.

It is well known that the thermal climate of a room is influenced by a number of different factors. What is probably less well known is how each of these factors influences the indoor climate or the required effect.

The example below compares the extent of the influence of some of these factors in an office during the summer. Naturally, the results only apply to the current example, but, to a certain extent, can also act as guidelines for other rooms. The conditions for the original office are shown on page 5. The simulations were performed in TEKNOsim.

- Room (15 m²) with one window, 1.2 m × 1.6 m, facing south, double-glazed clear glass.
- One person, one computer, normal lighting; all of them with a “working time” between 08:00 and 17:00.
- Ventilation with 15 l/s and a supply air temperature of +19° C.
- In the light room, all wall surfaces, façades and inner walls are constructed from plasterboard with insulation. Wooden floor and ceiling joists. No suspended ceiling.
- In the heavy room, the inside of the outer façade and the floor and ceiling joists are in concrete. The interior walls are like those in the light room. No suspended ceiling.
- For cooling effect calculations, the max. indoor temperature is 25° C. It does not come as a surprise that an increase in the window area or a halving of the solar incident radiation is of great significance. The solar incident radiation can be reduced by sun blinds or by changing the window. Another very important factor is the direction in which the façade faces. On the other hand, an increase in the outdoor temperature has a rather small effect.

The percentage difference in the effect requirement between the light and the heavy room averages 33% for the different cases. The difference in the room temperature between the light and the heavy room without additional cooling averages 7.5° C.

TEKNOsim Climate simulation

1 2 3 4 5 6 7 8 9 10 11 12 13 14 15 16 17 18 19

The most important characteristics of TEKNOsim are:

- The programme is Windows-based and graphical. This makes the programme very easy to use and helps to get a quick overview of the input data and results, even if the programme is used only rarely.
- The programme can be used at all stages of the construction process. Floor, walls and ceilings are easy to define as light, medium or heavy structures, even if the actual structure is not known.
- Most input data is selected with one mouse click. Ready structures for walls, windows, ceilings and floors, as well as other features, are selected from a database via dialogue boxes.
- All internal cooling and heating loads from cooling products, machinery and people are handled dynamically in relation to the temperature of the room. The programme does take into account heat storage in the room's building structures in proportion to the load.
- All information in the database is fully accessible, so each user can supplement, modify or remove objects.
- An input data wizard leads beginners through all input data windows to the result of the run.
- The programme is general, i.e. you can choose whether the programme should dimension our products or not. We do not want TEKNOsim to be yet another example of manufacturer-dependent software. When calculating the necessary cooling effect, the user can choose between air cooling (100 % convection) or any of Lindab's products (a mixture of radiation and convection).
- Apart from calculating effect requirements or the resulting temperatures (air and operative), TEKNOsim also calculates the PPD index. (Predicted Percentage of Dissatisfied with the given climate.)
- Results are presented in both graphical and text form. Since TEKNOsim works in a Windows-environment, all results can easily be exported to other Windows applications, e.g., Word or Excel.

Table 1: Table 1 shows how a change in different parameters affects the necessary cooling effect (exclusive of cooling from the ventilation) for a given office.

Example: When the solar incident radiation is reduced by 50%, the cooling effect requirement falls by 40% for the light room and by 42% for the heavy room, compared to the original heavy room.

Table 2: Table 2 illustrates how a change in different parameters affects the maximum room temperature with no additional cooling effect.

Calculation parameters	Light room (W)	Diff. (%)	Heavy room (W)	Diff. (%)
Original office	887	0	589	0
Solar radiation -50 %	534	-40	347	-42
Window area +50 %	1228	+38	809	+35
Façade facing north	398	-55	266	-56
With suspended ceiling	883	-0.5	629	7
Vent. Flow +50 %	825	-7	506	-15
Supply air temp. from 19 to 17° C	843	-5	532	-10
Outdoor vent. 15 l/s	1080	+21	789	+31
Internal load +50%	1020	+15	720	+20
Outdoor temp. raised by +3° C	922	+4	632	+6

Table 1.

Calculation parameters	Light room (W)	Diff. (%)	Heavy room (W)	Diff. (%)
Original office	37.9	0.0	29.9	0.0
Solar radiation -50%	33.1	-4.8	27.5	-2.4
Window area +50%	42.2	+4.3	32.3	+2.4
Façade facing north	31.1	-6.8	26.8	-3.1
With suspended ceiling	37.9	±0	31.3	+0.4
Vent. Flow +50 %	34.9	-3.2	28.5	-1.4
Supply air temp. from 19 to 17° C	35.6	-2.3	28.3	-1.6
Outdoor vent. 15 l/s	41.1	+3.2	32.0	+2.1
Internal load +50%	40.4	+2.5	31.3	+1.4
Outdoor temp. raised by +3° C	38.8	+0.9	30.5	+0.6

Table 2.

We reserve the right to make changes

TEKNOsim Climate simulation

TEKNOsim has been used for climate simulation by thousands of satisfied users since 1995; it is also used in training contexts. We have entrusted Chalmers University of Technology to evaluate TEKNOsim in a number of different simulation cases. The results show good agreement with reality. (A simulation program called BRIS, developed by the Royal Institute of Technology in Stockholm, was used for verification. BRIS, in turn, has been verified against real-life cases in many building research projects.)

Comparisons with BRIS was made for three types of rooms.

- Room 1 is a normal office with normal internal loads in two designs; a light and a heavy building structure.
- Room 2 is similar to room 1 in the heavy design, but with two outer facades with large window surfaces and no internal loads. In this case, we study the effects of strong sun loads and simultaneous storage in a heavy building structure.
- Room 3 is similar to room 1 in the heavy design but without windows. The load in the room comes instead from 10 persons during two periods of the day. In this case, we study the effects of a strong and varying internal load, which can correspond to the conditions in a conference room, assembly room or suchlike.

Three scenarios were run for each room:

- **Without basic cooling:** the ventilation air is taken from the outdoors, calculation of the resulting room conditions.
- **With basic cooling:** the ventilation air, 20 l/s, is cooled to 19° C, calculation of the resulting room conditions.
- **Dim. cooling effect:** necessary cooling effect calculated for a max. room temperature of 25° C.

Calculation parameter Resulting room temp.	TEKNOsim (°C)	BRIS (°C)	Difference (TS-BRIS)
Room 1, light w/o basic cooling	35.6	35.6	±0° C
Room 1, light with basic cooling	31.6	31.3	+0.3° C
Room 1, heavy w/o basic cooling	29.7	29.9	-0.2° C
Room 1, heavy with basic cooling	27.1	27.2	-0.1° C
Room 2, light w/o basic cooling	33.6	32.9	+0.7° C
Room 2, light with basic cooling	31.2	30.5	+0.7° C
Room 2, heavy w/o basic cooling	27.8	28.2	-0.4° C
Room 2, heavy with basic cooling	25.8	26.2	-0.4° C

Table 3.

Calculation parameter Resulting room temp.	TEKNOsim (°C)	BRIS (°C)	Difference (TS-BRIS)
Room 1, light dim. cooling effect	707	696	+1.6%
Room 1, heavy dim. cooling effect	494	503	-1.8%
Room 2 dim. cooling effect	828	851	-2.7%
Room 3 dim. cooling effect	448	449	-0.2%

Table 4.

TEKNOsim Climate simulation

1
2
3
4
5
6
7
8
9
10
11
12
13
14
15
16
17
18
19

Possibilities and new features in TEKNOsim Europe

1. Accurate climate simulation for the interaction of internal and external heat loads and for the affect of these on the indoor climate.
2. Simulates how the selection of different building components influences the indoor temperature. Select building components from a comprehensive database of finished components.
3. Duration calculation for the room temperature (known in Sweden as the P25 and P27 method). Here you can calculate how often the room temperature exceeds a given value. You can use this to produce a more economical dimensioning for the climate solution.
4. Calculates the heating requirement for winter situations according to DUT or Swedish Standard SS024310.
5. Calculates the directed operative temperature. As usual, TEKNOsim is not manufacturer-dependent, and you can select from ceiling heating, floor heating, convectors and radiators.
6. Improved and extended product range with dynamic support for changes to the air volume and pressure settings for a certain product. This selection option can also be used to find the right product size for a certain requirement.
7. Printouts for input and output data in both graphical and text form.
8. Climate data for 11 European countries and more than 150 cities. Possibility to input climate data yourself for additional cities.
9. Language support for 8 European languages.
10. Simple programme updates for TEKNOsim over the Internet.

Swedish

Norwegian

Danish

Finnish

English

German

Polish

Italian

We reserve the right to make changes